GF Piping Systems

+GF+

42nd Edition Signet Instrumentation

Measurement and Control Product Catalog

Transmitters (blind and display)
Monitors & Controllers
Network Communications
Flow
Level
pH/ORP
Conductivity/ Resistivity
Chlorine
Dissolved Oxygen
Pressure
Temperature

NEW
Flow Sensor

Full-bore magnetic flowmeter

High accuracy and lighter weight

The Signet 2580 FlowtraMag Meter is a full-bore plastic in-line style magnetic flow meter. The PVC body with titanium electrodes has no moving parts, and is two to three times lighter in weight compared to traditional metal magmeters on the market.

It is designed for high accuracy flow measurement in short pipe runs. Users can configure and calibrate the 2580 using the GF Configuration Tool Bluetooth® App.

+ Features & Benefits

- No moving parts
- Lighter in weight compared to traditional metal magmeters
- Reduced straight run requirements, ideal for final effluent lines, wellheads and skids
- Factory calibrated with certificate (±1% of reading accuracy)
- Partially filled pipe detection status indicator
- Reverse flow direction configurable with 0252 Configuration Tool or GF Config Tool Bluetooth® App
- One device with three different outputs: field selectable Frequency or Digital (S^3L), and analog 4 to 20 mA
- On-the-fly configuration with GF Config Tool Bluetooth® App

+ Applications

- Chemical Processing/Production
- Cooling Tower
- Filtration Systems
- Water and Wastewater Treatment
- Municipal and Industrial Water Distribution
- Pool and Aquatics
- Process Control, Water Process Flow
- Reverse Osmosis
- Scrubber Systems
- Metal Recovery and Landfill Leachate
- Mining

Approvals

NSF Pending

U.S. and International Patents Pending

GF Piping Systems

Your global system provider

We are dedicated to designing, manufacturing and marketing piping systems for the safe and secure conveyance of liquids.

Customer Support

In choosing Georg Fischer, you can be assured of excellent customer service through our extensive network of distributors located throughout the world. Our staff are well qualified to assist you in every aspect of product selection thus assuring you of the right solution for your liquid control needs.

GF Quality, Sustainability and Security by Design

Quality Management: Our systems and products undergo rigorous testing in accredited test laboratories, and our management and production procedures are certified to ISO 9001, ISO 14001 and OHSAS 18001 through ensuring that the systems and products we provide are fit for the purpose, and may be used reliably throughout the world.

GF Values

We put customers first

- Customer needs guide our product development
- We offer customer support and training worldwide
- We measure your satisfaction

We act fast

- Local presence worldwide
- Superior logistics
- Speed in all details

We do what we say

- Tested quality
- Always trustworthy

We reward performance

- We benchmark ourselves against the best

We respect people

- We value all contributions


Pipes


Fittings

Jointing Technologies


Valves


Actuation

Measurement and Control

Table of Contents

System Selection Guide

This section provides tips and suggestions on how to choose just the right measurement system for your specific liquid application needs. For specific product information, refer to the individual catalog pages.

Note: Please contact your local Georg Fischer sales and support office if you need assistance in choosing any one of these products.

Step 1: Determine Application Requirements

Defining the following variables before building your system will ensure peak performance from your Signet sensors and instruments.

- Measurement range
- Installation requirements
- Pipe size and material
- Chemical compatibility of all wetted parts to process chemicals
- System specifications (such as temperature and pressure)
- Performance requirements of sensor
- Particle and fiber load in fluid
- Viscosity of liquids
- Hazardous location requirements

Step 2: Select Sensor Technology

Based on the application requirements determined in Step 1, choose a sensor.

Determine your signal output requirement to allow you to match just the right instrument (see Step 3). If you're not purchasing an instrument, select the sensor electronics package that best suits your needs.

Step 3: Choose Instrument

Choose an instrument. Instruments are available in ¼ DIN size and offered in panel mount configurations. Field mount versions are also offered for certain models. Instruments are available with either digital, analog, or analog/digital display. Various retrofit adapters and mounting accessories are also available (see Accessories section). In cases where the sensor feeds directly to a PLC or PC system, GF offers a wide range of instruments and sensors with 4 to 20 mA outputs.

Step 4: Determine Installation Requirements

GF offers a wide selection of installation fittings for flow sensors and in-line pH/ORP electrodes. These fittings are specifically designed to ensure the proper placement of the flow sensor in the piping system to achieve optimum performance. Other pH/ORP electrodes as well as all temperature, pressure and conductivity/resistivity electrodes use NPT or ISO standard fittings. All submersion electrodes require conduit piping and fixtures not supplied with unit.

New Product and Upgrades

D100 DeviceLink Network (pg. 6) With up to 10 sensor inputs and two Modbus inputs from 9900 or 9950 Transmitter Modbus equipped devices, the latest offering from Georg Fischer provides the simplicity Signet Instrumentation has come to be known for along with the power to monitor remotely as well as on site. This system can be configured with direct sensor inputs (up to (6) (S^3L), (2) Frequency and 2 4 to 20 mA), or can be adapted to existing systems utilizing the (6) 4 to 20 mA input versions of the D100. Up to (4) 4 to 20 mA outputs and (4) mechanical relays can be included in the list of available options. Monitor and establish settings on the optional on board touchscreen display or from your PC, smart phone or web enabled tablet. With its tiered security up to five users can be assigned at different levels ensuring peace of mind for the installation.

9950 Dual Channel Transmitter (pg. 18) - The 9950 SmartPro Transmitter has undergone 3 Generation upgrades since our last printing. You can now custom label 4 to 20 mA outputs, Relays and Derived functions. The red back lighting can be assigned to light up with any or all relay activations (selected in each individual relay menu). Support for the remote calibration features and diagnostics for the 2751 pH/ORP Sensor electronics. Additional optional 4 to 20 mA output modules (2 outputs per module) for up to six 4 to 20 mA outputs including Primary readings, secondary readings, and derived functions. Single as well as dual direct conductivity modules for more economical space saving options. Modbus Module options were also added to allow the user to access live digital data measurement readings, state of the current loop outputs, relay activations, calculated derived functions, and system status. And remember, all 9950's can be updated to current versions by visiting www.gfpiping.com and downloading the latest drivers onto a USB stick.

9900 Modbus Modules (pg. 26) – The 9900 both panel and field mount have a Modbus Module option compatible with all Generations of the 9900. Modbus communication to control systems offers many advantages over 4 to 20 mA current loops such as multiple readings and devices on a single pair of wires, data quality indication through the availability of measurement error messages, and increased confidence that the correct measurement is being used for control through the transmission of measurement type and units of measurement information. Transmitted information includes primary and secondary readings, units of measurement for each reading, and sensor status (good reading, missing sensor, missing probe, and wrong sensor). Three versions of the Modbus Module are now available.

9900/9950 Instrument Enclosures (pg. 40) – To enhance our Custom Enclosure capabilities, we offer several off-the-shelf enclosures for the SmartPro family. This brings added convenience to customers that do not have readily available resources to mount Signet instrumentation.

Enhanced 0252 Configuration Tool (pg. 44) – Now includes interfacing with the new 2580 FlowtraMag and 2751 pH/ORP Smart Sensor Electronics as well as 9900 SmartPro, many of the "Blind" Transmitters 2551 and 2552 Magmeter's, 2250 Hydrostatic Level, 2350 Temperature and 2450 Pressure sensors.

2580 FlowtraMag Meter (pg. 74) - The Signet 2580 FlowtraMag is a full-bore plastic in-line style magnetic flow meter. The PVC body with titanium electrodes has no moving parts, and is two to three times lighter in weight compared to traditional metal magmeters on the market. It is designed for high accuracy flow measurement in short pipe runs, making it an ideal solution for industrial applications where performance and simplicity are important. Easily configurable via the GF Config Tool Bluetooth® App or 0252 tool.

Ultrasonic Flow Display Transmitter (pg. 118) – The latest enhanced affordable solution for non-intrusive flow measurements. The U1000 V2 now has an expanded size range of ¾" to 6". This Ultrasonic Transit-Time flow sensor is a simple clamp-on solution. Easy quick-start programming, integral display, analog 4 to 20 mA and pulse output to a 9900 or 9950 make it a versatile option at an economical price.

3719-XX Wet-Tap Assembly Enhancement (pg. 188) – Effective November 22, 2017 the 3719 pH and ORP Wet-Taps have been redesigned to allowing for full access to the inner components of the assemblies for o-ring replacement (service kit – 159 310 304) and periodic lubrication. This new feature will help to extend the life of the assembly and make it easier to insert and retract the electrodes. Service Video is now available on our You Tube Channel (see QR code below).

2751 pH/ORP Smart Sensor Electronics (pg. 200) – This new evolution to the pH/ORP product line will allow users to monitor the health of their electrodes in process. With smart chip technology, the user can clean, recondition (see Electrode Cleaning and Conditioning videos on our You Tube Channel (see QR code below), and calibrate their pH or ORP electrodes in a clean lab environment, and then take the calibrated electrodes out to their process measurement location for installation into the local 2751 Smart sensor electronics.

2610-51 Gen II Dissolved Oxygen Sensor (pg. 316) – The 3-2610-51 Gen II (159 310 301) with its new sensor cap (3-2610.394) now has an extended life of up to 24 months from the initial reading without any additional calibration required. The DO sensor now has an assortment of support material to assist your customers in installing and maintaining the sensor.

Signet 3719 pH Wet-Tap O-ring Service video

Signet pH Electrode Cleaning and Conditioning video

Signet D100 DeviceLink Network

Connected via
Network Interface

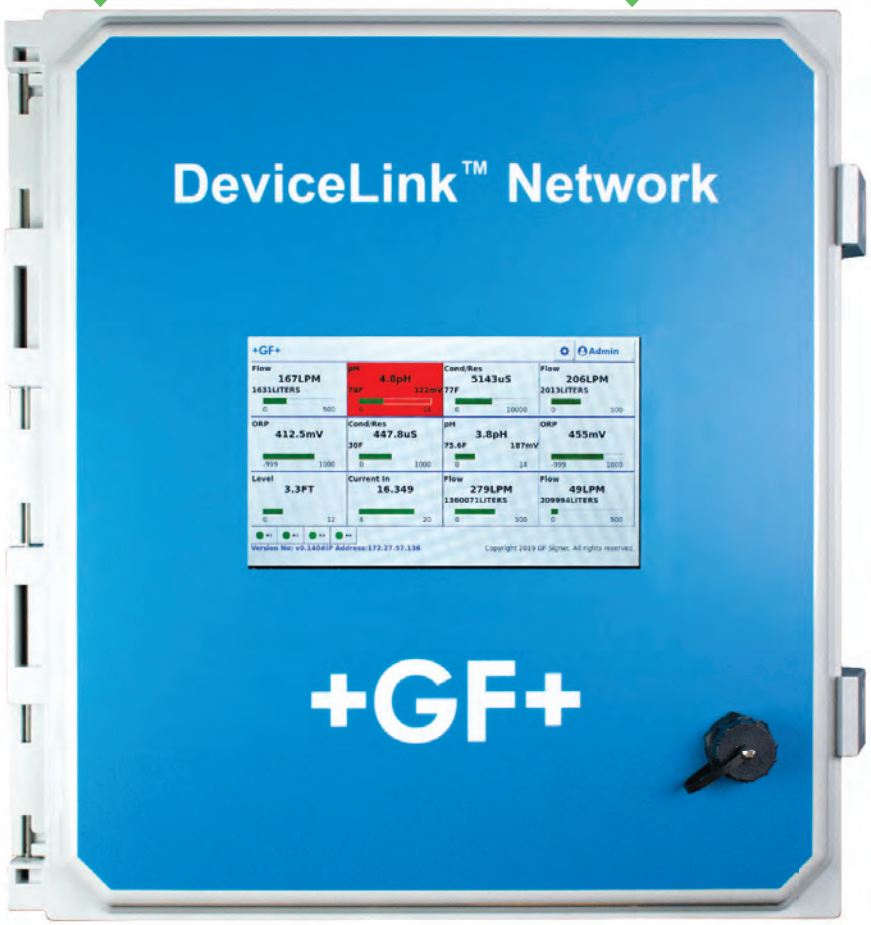

Up to 10 Channels of Inputs
(plus two Modbus)
- Flow
- pH/ORP
- Conductivity/Resistivity
- Salinity
- Temperature
- Pressure
- Level
- Volume
- Other 4 to 20 mA
- Dissolved Oxygen (via 4 to 20 mA)

Features and Benefits

- Web enabled
  - Remote monitoring
  - Adjustments via computer or tablet
  - Alarm notifications via text or email

- Multiple signal input capability
  - S^3L - for direct smart sensor input
  - 4 to 20 mA - for use with existing Signet systems 9950, 9900, Signet blind sensor, or third party analog signal
  - Modbus – more parameter values for use with 9950 or 9900 with Modbus Modules

- USB Port - for Field Upgrades using Standard USB Flash Drive making updates easier

Stay Connected.

Flow - Digital (S^3L)

Conductivity /Resistivity - Digital (S^3L)

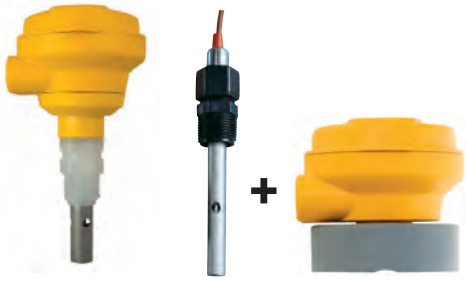

pH / ORP - Digital (S^3L)

Temperature - Digital (S^3L)

Pressure/ Level - Digital (S^3L)

SmartPro - 4 to 20 mA or Modbus

Other - (DO, Ultrasonic/Radar Level) 4 to 20 mA

Signet D100 DeviceLink™ Network

COMING 2020

The Signet D100 DeviceLink™ Network is tailored for industrial users that are interested in simplicity. The DeviceLink Network is a plug-n-play system designed to connect to the internet, allowing users full accessibility to the system anytime, anywhere using smart devices. The system is fully protected thru three tier security, allowing up to 5 users to be assigned.

DeviceLink is available in several packages for both new systems or retrofit applications. All packages include remote monitoring capabilities as well as optional control features tailored for your application.

Packages tailored for new systems will support up to 12 devices, including six (S^3L), two frequency, two 4 to 20 mA inputs, and two 9900/9950 Modbus devices. Retrofit packages will support up to six 4 to 20 mA input devices, and two 9900/9950 Modbus devices. Systems are available for universal AC power or DC power, all installed inside a NEMA 4X enclosure and ready for wall mounting.

Add control capability to the DeviceLink Network by selecting the 4 to 20 mA and relay output options. Choose from 4 mechanical or 2 mechanical and 2 solid state relays, and up to 4 current loop outputs.

The optional 7 inch touchscreen display is available for local control, calibration and monitoring of up to 12 devices. Users can connect using Smart Devices via the web, or plug in an external display via HDMI.

Features

- **3-D100-1 accepts six (S^3L) sensors, two frequency sensors, two 4 to 20 mA sensors, and two Modbus 9900/9950 signals.**
- **3-D100-2 accepts six 4 to 20 mA sensors, and two Modbus 9900/9950 signals to add remote monitoring and alarm messaging to an existing system.**
- **User configurable output options include 4 relays and 4 current loop outputs using 1 Relay and 2 Dual Current Loop Modules**
- **Programmable from optional LCD touch screen or any modern web browser, PC, smartphone, or tablet**
- **HDMI output for external monitor**
- **Connect your critical information to your network for easy access**
- **Retrofit any existing Signet sensor**
- **Receive alarm notifications via e-mail or text**
- **AC power or DC power options**
- **Simple installation and setup**

LISTED
MEASURING EQUIPMENT
77CJ

Applications

- **Wastewater Treatment**
- **Reverse Osmosis**
- **Deionization**
- **Chemical Manufacturing / Addition**
- **Metal and Plastic Finishing**
- **Fume Scrubber**
- **Cooling Towers**
- **Media Filtration**
- **Chemical Dosing/ Injection**
- **Aquatic Life Support**
- **Pools & Fountains**
- **Rinse Tanks**
- **Chemical Neutralization**

Specifications

General			
Input Channels		Up to 10 channels, programmable for six digital (S^3L), two frequency or two or six 4 to 20 mA input, depending on package selected, or six 4 to 20 mA inputs. Up to two 9900/9950 Modbus devices	
Optional Outputs		Four passive 4 to 20 mA loop outputs	
		Four programmable relay outputs	
Enclosure and Display			
Case Material		Polycarbonate	
Optional display		7 inch LCD touchscreen	
Update Rate		1 s	
Enclosure Size		14.75 in. height x 12.72 in. width x 7.19 in. depth	
Mounting		Wall mount enclosure	
Terminal Blocks			
Pluggable Screw Type		Use minimum 105 °C rated wire torque ratings	
	Power/Loop	0.49 Nm (4.4 lb-in.)	
	Freq/S^3L	0.49 Nm (4.4 lb-in.)	
	Relay	0.49 Nm (4.4 lb-in.)	
Connector Wire gauge		14 AWG maximum	
Environmental			
Ambient Temperature			
	DC Power	-10 °C to 60 °C	14 °F to 140 °F
	AC Power	-10 °C to 50 °C	14 °F to 122 °F
	Display Models	-10 °C to 60 °C	14 °F to 140 °F
	Storage Temp	-15 °C to 70 °C	5 °F to 158 °F
Relative Humidity		0 to 99% condensing environment	
Maximum Altitude		2,000 m	6,561 ft
Enclosure Rating		NEMA 4X/IP65	
Installation Category		Cat II	
Pollution Degree		2	
Performance Specifications			
System Accuracy		Primarily dependent upon the sensor	
System Response		Primarily dependent upon the sensor. Controller adds a maximum of 150 ms processing delay to the sensor electronics	
		Minimum update period is 100 ms	
		System response is tempered by the display rate, output averaging and sensitivity feature	
Electrical Requirements			
Power to (S^3L) and Flow Sensors			
Voltage		+4.9 to 5.5 VDC @ 25 °C, regulated	
Current		30 mA Maximum	
Short Circuit		Protected	
Isolation		Low voltage (< 48 V AC/DC)	
Power Requirements			
DC		24 VDC nominal (10.8 to 35.2 VDC regulated) 500 mA maximum	
AC		100-240 VAC, ±10%, regulated 50-60 Hz, 24 VA max	
Maximum power		40 W Max	
Current Loop		10.8 to 35.2 VDC 4 to 20 mA (30 mA max.)	
Overvoltage Protection		48 V Transient Protection Device (for DC ONLY)	
Current limiting for circuit protection			
Reverse-Voltage Protection			

Specifications subject to change

Specifications (cont.)

Sensor Input Specifications	
Digital (S^3L) Sensors	Serial ASCII, TTL level, 9600 bps
Frequency (Flow) Sensors	0.5 to 1500 Hz
Update Rate	(1/frequency) + 100 ms
Accuracy	± 0.5% of reading max. error @ 25 °C
Resolution	1 µs
Repeatability	± 0.2% of reading
Power Supply	
Rejection	No Effect ± 1 µA per volt
Short Circuit	Protected
Reverse Polarity	Protected
Current Loop Specifications	
Current Loop In	4 to 20 mA Input
Accuracy	± 32 µA
Resolution	16 µA
Input Range	3.6 to 22.1 mA
Update Rate	500 mS
Max Wire Length	200 ft (60.96 M)
Optional Current Loop Out	ANSI-ISA 50.00.01 Class H (passive, external voltage required)
Voltage	10.8 to 35.2 VDC
Max. Impedance	250 Ω @ 12 VDC
	500 Ω @ 18 VDC
	750 Ω @ 24 VDC
Span	3.8 to 21 mA adjustable, reversible
Accuracy	± 32 µA max. error @ 25 °C @ 24 VDC
Resolution	6 µA or better
Temperature Drift	± 1 µA per °C
Isolation	Low voltage (< 48 VAC/DC)
Update Rate	100 mS nominal
Zero	4.0 mA factory set; user programmable from 3.8 to 5.0 mA
Full Scale	20.00 mA factory set; user programmable from 19.0 to 21.0 mA
Power Supply Rejection	± 1 µA per V
	Actual update rate determined by sensor type
	Short circuit and reverse polarity protected
Adjustable Span, Reversible	
Error Condition	Selectable error condition 3.6 or 22 mA or None
Test Mode	Increment to desired current (range 3.8 to 21.00 mA)
Maximum Analog Outputs	4 Passive
Relay Specifications	
Dry-Contact Relays	
Type	SPDT
Form	C
Max. Voltage Rating	30 VDC or 250 VAC
Max. Current Rating	5 A resistive
Solid-State Relays	
Type	SPDT
Form	C
Max. Voltage Rating	30 VDC or 30 VAC
Max. Current Rating	0.050 A
Hysteresis	Adjustable (absolute in Engineering Units)
On Delay	9999.9 seconds (max.)
Proportional Pulse	400 pulses/min.
Test Mode	Set On or Off

Specifications (cont.)

Input Types		
	Digital (S^3L)	
	AC frequency or open collector pulse	
	4 to 20 mA	
	pH/ORP input via the Digital (S^3L) output from the 2751 pH/ORP Smart Sensor Electronics	
	Raw Conductivity/Resistivity via the Digital (S^3L) output from the 2850 Conductivity/Resistivity Sensor Electronics	
Sensor Types	Flow, pH/ORP, Conductivity/Resistivity, Pressure, Temperature, Level/Volume, Other (4 to 20 mA)	
Current Outputs		
	Four 4 to 20 mA outputs in optional modules	
	Linear scaling	
	Reverse span	
	Selectable error mode: 3.6 mA or 22 mA or None	
	Test Output mode: allows testing of the current output	
	Adjustable 4 to 20 mA end points	
Display Ranges		
pH	-1.00 to 15.00 pH	
pH Temp	-99 °C to 350 °C	-146 °F to 662 °F
ORP	-1999 to +1999.9 mV	
Flow Rate	-9999 to 99999 units per second, minute, hour or day	
Totalizer	0.00 to 99999999 units	
Conductivity	0.0000 to 99999 µS, mS, PPM and PPB (TDS), kΩ, MΩ	
Cond. Temp	-99 °C to +350 °C	-146 °F to 662 °F
Temperature	-99 °C to +350 °C	-146 °F to 662 °F
Pressure	-40 to 1000 psi	
Level	-9999 to +99999 m, cm, ft, in, %	
Volume	0 to 99999 cm^3, m^3, in^3, ft^3, gal, L, lb, kg, %	
Shipping Weights		
Base Unit	5.74 kg (12.65 lbs)	
Standards and Approvals		
	CE, UL, CUL, FCC	
	RoHS Compliant, China RoHS	
	Manufactured under ISO 9001 for Quality, ISO 14001 for Environmental Management and OHSAS 18001 for Occupational Health and Safety	

Designed to connect to your intranet, the DeviceLink allows users full accessibility to the system anytime, anywhere using smart devices. Optional control features can be tailored for your specific application.

Dimensions

Front View

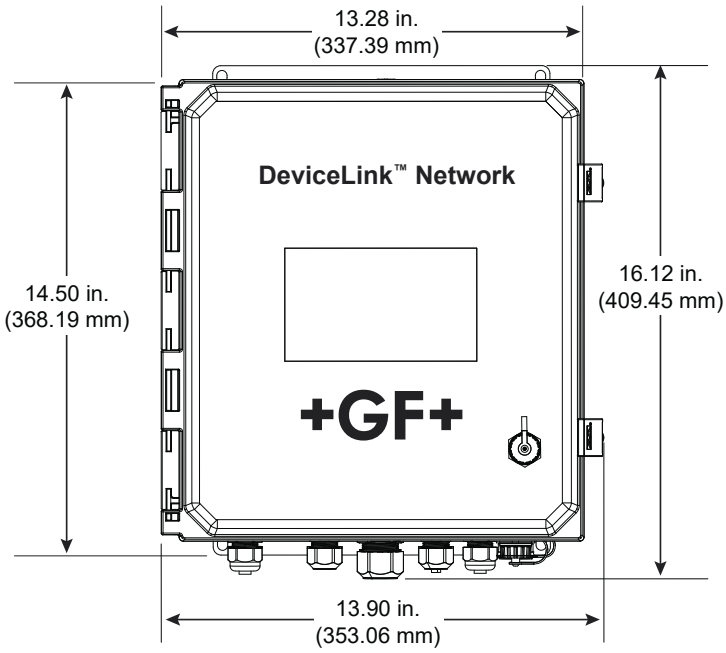

Side View

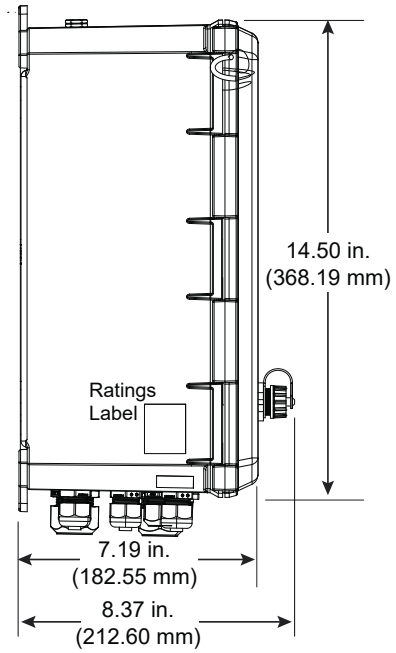

System Overview

Stand-Alone	Frequency Input	S³L Digital Input	Level and Other 4 to 20 mA Sensors	4 to 20 Output
Signet D100 DeviceLink	Signet Sensors 515/8510 525 2536/8512 2540 2000 2100 2507 U1000	Signet Sensors 2537-5 2551 2580 2751 2850 2250 2350 2450	2260 2270 2290/2291	Customer Supplied Chart Recorder, Programmable Logic Controller, or Programmable Automation Controller OR
	Signet D100 DeviceLink with 9900/9950 with Modbus Modules or + or +			

Ordering Information

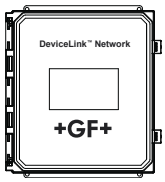

Mfr. Part No.	Code	Description
D100 DeviceLink		
3-D100-01-AC-W-00	**159 001 893**	DeviceLink Network, (6) S^3L, (2) frequency, (2) 4 to 20 mA inputs, (2) 9900/9950 Modbus Channels, AC, display
3-D100-01-AC-N-01	**159 001 894**	DeviceLink Network, (6) S^3L, (2) frequency, (2) 4 to 20 mA inputs, (2) 9900/9950 Modbus Channels, AC, no display, (4) 4 to 20 mA outputs, (4) mechanical relays
3-D100-01-AC-W-01	**159 001 895**	DeviceLink Network, (6) S^3L, (2) frequency, (2) 4 to 20 mA inputs, (2) 9900/9950 Modbus Channels, AC, display, (4) 4 to 20 mA outputs, (4) mechanical relays
3-D100-01-DC-W-00	**159 001 896**	DeviceLink Network, (6) S^3L, (2) frequency, (2) 4 to 20 mA inputs, (2) 9900/9950 Modbus Channels, DC, display
3-D100-01-DC-N-01	**159 001 897**	DeviceLink Network, (6) S^3L, (2) frequency, (2) 4 to 20 mA inputs, (2) 9900/9950 Modbus Channels, DC, no display, (4) 4 to 20 mA outputs, (4) mechanical relays
3-D100-01-DC-W-01	**159 001 898**	DeviceLink Network, (6) S^3L, (2) frequency, (2) 4 to 20 mA inputs, (2) 9900/9950 Modbus Channels, DC, display, (4) 4 to 20 mA outputs, (4) mechanical relays
3-D100-02-AC-W-00	**159 001 899**	DeviceLink Network, (6) 4 to 20 mA inputs, (2) 9900/9950 Modbus Channels, (2) 9900/9950 Modbus Channels, AC, display
3-D100-02-AC-N-01	**159 001 900**	DeviceLink Network, (6) 4 to 20 mA inputs, (2) 9900/9950 Modbus Channels, (2) 9900/9950 Modbus Channels, AC, no display (4) 4 to 20 mA outputs, (4) mechanical relays
3-D100-02-AC-W-01	**159 001 901**	DeviceLink Network, (6) 4 to 20 mA inputs, (2) 9900/9950 Modbus Channels, AC, display (4) 4 to 20 mA outputs, (4) mechanical relays
3-D100-02-DC-W-00	**159 001 902**	DeviceLink Network, (6) 4 to 20 mA inputs, (2) 9900/9950 Modbus Channels, DC, display
3-D100-02-DC-N-01	**159 001 903**	DeviceLink Network, (6) 4 to 20 mA inputs, (2) 9900/9950 Modbus Channels, DC, no display (4) 4 to 20 mA outputs, (4) mechanical relays
3-D100-02-DC-W-01	**159 001 904**	DeviceLink Network, (6) 4 to 20 mA inputs, (2) 9900/9950 Modbus Channels, DC, display (4) 4 to 20 mA outputs, (4) mechanical relays
Optional Modules		
3-9950.393-1	**159 310 268**	Relay Module with (4) mechanical relays
3-9950.393-2	**159 310 269**	Relay Module with (2) mechanical and (2) solid state relays
3-9950.398-2	**159 001 848**	Dual Channel 4 to 20 mA Current Loop Output

Accessories and Replacement Parts

Mfr. Part No.	Code	Description
7310-6024	**159 873 007**	24 VDC Power Supply, 60 W, 2.5 A
7310-7024	**159 873 008**	24 VDC Power Supply, 96 W, 4.0 A
3-8050.396	**159 000 617**	RC Filter Kit (for relay use), 2 per kit

Signet Single and Multi-Parameter

	D100	9950	9900
Description	DeviceLink™ Network	Multi-Channel (2 Channel), Multi-Parameter Controller	Single-Channel, Multi-Parameter Transmitter
Modular Components		Yes	
Number of Flow Totalizers	1 Permanent, 1 Resettable per channel of Flow input	2 Permanent 2 Resettable	1 Permanent 1 Resettable
Max. Sensor Inputs	Up to 12 channels, programmable for Digital (S^3L), frequency or 4 to 20 mA input, depending on package selected and (2) Modbus via 9900 or 9950.	2 frequency or S^3L inputs	1
Mounting Options	Panel	Panel	Panel, Wall, Pipe, Tank
Display	7 in. LCD touch screen or web browser, PC, smartphone, or tablet	LCD, Dot matrix	LCD with digital bar graph
Analog Output Types	Up to (4) passive 4 to 20 mA loop outputs	(2) Passive 4 to 20 mA Outputs, Standard Up to (6) via optional modules (optional relay module)	(2) Passive 4 to 20 mA (1) Standard, (1) Optional with 4 to 20 mA Output module HART optional with H COMM module
Max. Relays	Up to (4) Dry-Contact, programmable relay	(4) Dry-Contact Relays or (2) Mechanical and (2) Solid State Relays (optional relay module)	(1) open collector (standard) (2) relays (optional relay module)
Derived Measurements	N/A	6 Derived Measurements Sum, Delta (Difference), Ratio, % Passage, % Reject, % Recovery	N/A
Languages	English	English, French, German, Spanish and Simplified Chinese	English
Ambient Temperature (°C) **Storage Temperature (°F)**	AC -10 °C to 50 °C (14 °F to 122 °F) DC -10 °C to 60 °C (14 °F to 140 °F) Display Models: -10 °C to 60 °C (14 °F to 140 °F) Storage Temp: -15 °C to 70 °C (5 °F to 158 °F)	DC -10 °C to 70 °C (14 °F to 158 °F) AC -10 °C to 60 °C (14 °F to 140 °F) -15 °C to 70 °C (5 °F to 158 °F)	-10 °C to 70 °C (14 °F to 158 °F) -15 °C to 70 °C (5 °F to 158 °F)
Relative Humidity	0 to 99% condensing environment	0 to 95%, non-condensing	
Power Requirements	DC - 24 VDC nominal (10.8 to 35.2 VDC regulated) 500 mA maximum AC - 100-240 VAC, ±10%, regulated 50-60 Hz, 24 VA max	DC - 24 VDC nominal (12 to 32 VDC, ±10% regulated) AC - 100 to 240 VAC, 50 to 60 Hz, 24 VA	24 VDC input; range: (10.8 to 35.2 VDC regulated)
Standards and Approvals	CE, UL, CUL, FCC, RoHS Compliant, China RoHS, NEMA 4X/IP65	CE, FCC, UL, CUL, RoHS compliant, China RoHS, NEMA TYPE 4X/IP65 (front face only on panel mount)	CE, FCC, UL, CUL, RoHS compliant, Lloyd's Register, China RoHS, NEMA TYPE 4X/IP65 (front face only on panel mount); field mount is 100% NEMA TYPE 4X/IP65

Specification Matrix

	9900-1BC	8900
Description	Single-Channel, Single Parameter Controller	Multi-Channel (4 or 6 Channel), Multi-Parameter Controller
Modular Components	Yes	
Number of Flow Totalizers	1 Permanent 1 Resettable	6 Permanent 6 Resettable
Max. Sensor Inputs	1	(up to 2 frequency and 4 (S^3L) or 6 (S^3L) 6 total sensor inputs
Mounting Options	Panel, Wall, Pipe, Tank installation using rear enclosure	Panel
Display	LCD with digital bar graph	LCD
Analog Output Types	(1) Passive 4 to 20 mA	(4) Passive/Active 4 to 20 mA or (2) 0 to 5/10 VDC
Max. Relays	(1) open collector (2) relays	up to 8 relays (via 8059)
Derived Measurements	N/A	Sum, Difference, % Recovery, % Reject, % Passage, Ratio, Power (BTU)
Languages	English	English, French, German, Spanish, Italian, and Portuguese
Ambient Temperature (°C) **Storage Temperature (°F)**	-10 °C to 70 °C (14 °F to 158 °F) -15 °C to 70 °C (5 °F to 158 °F)	-10 °C to 55 °C (14 °F to 131 °F) -15 °C to 80 °C (5 °F to 176 °F)
Relative Humidity	0 to 95%, non-condensing	
Power Requirements	24 VDC input; range: 10.8 to 35.2 VDC regulated	12 to 24 VDC ±10%, regulated or 100 to 240 VAC ±10%, regulated, 50/60 Hz
Standards and Approvals	CE, UL, CUL, FCC, RoHS compliant, China RoHS, NEMA TYPE 4X/IP65 (front face only)	CE, FCC, UL, CUL, RoHS compliant, China RoHS NEMA 4X/IP65 (front face only)

Signet 9950 Transmitter Compatibility Overview

The 9950 Transmitter provides a single channel interface for:

- Flow
- pH/ORP
- Conductivity/Resistivity
- Salinity
- Temperature
- Pressure
- Level
- Volume
- Other 4-20 mA
- Dissolved Oxygen

The 9950 is available for Panel Mount installations

Features and Benefits

One Instrument for Multiple Sensor Types
- Two different sensor types can be combined in one instrument

Configurable Display
- Derived Measurements
- Advanced Boolean Logic
- Units and Decimals

Optional Modules can be Added for Additional Capabilities

USB Port for Field Upgrades Using Standard USB Flash Drive
...making updates easier

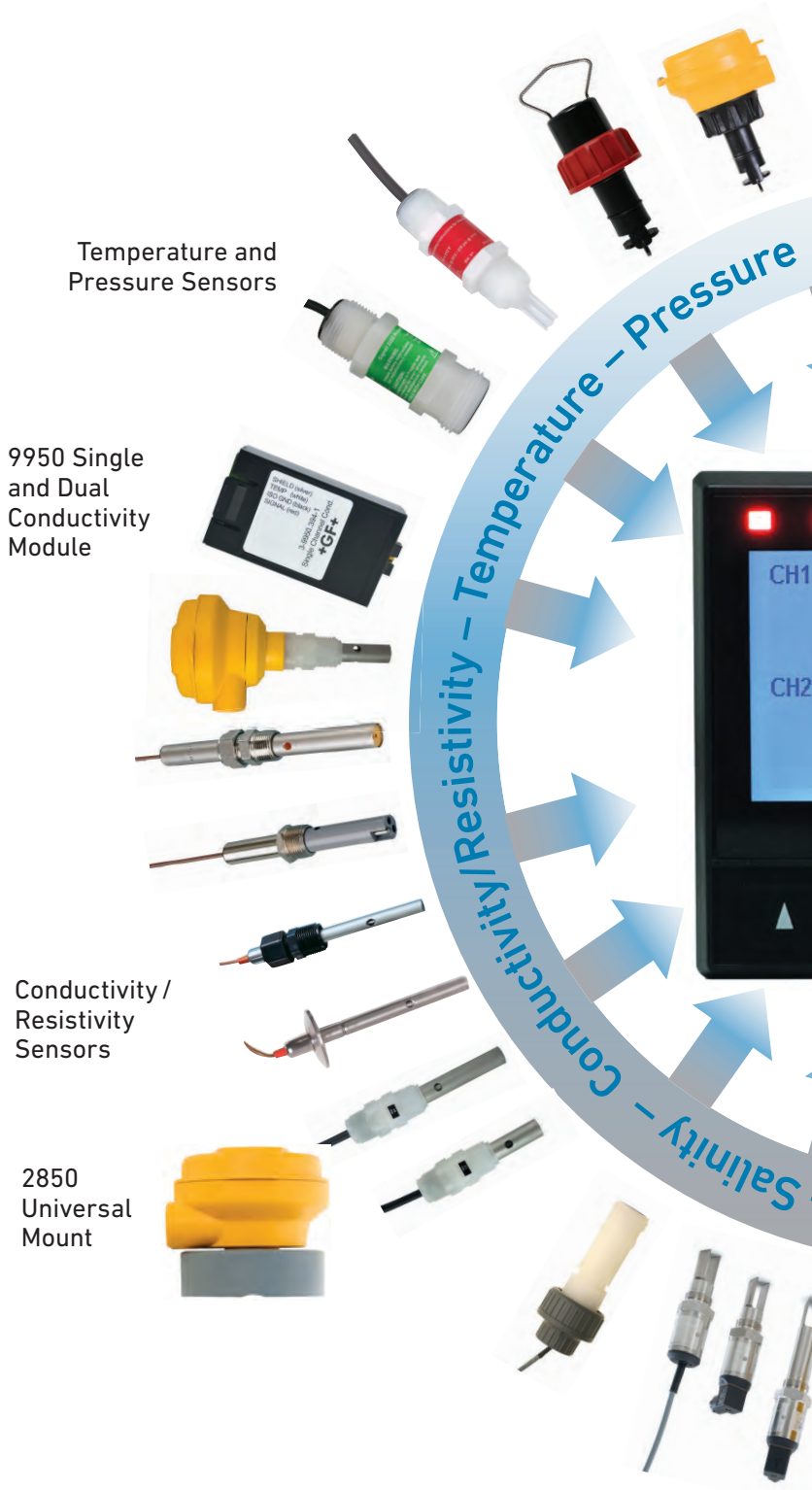

Absolute Input Versatility!

*Ultrasonic, Radar, Hydrostatic and Point Level (*Note: requires 3-8058-1 iGo Device)

Signet 9950 Dual Channel Transmitter

Member of the SmartPro® Family of Instruments

The 9950 Transmitter is a two channel controller that supports two sensors of same or different types in one instrument. The sensor types supported by the 9950 are Signet Flow, pH/ORP, Conductivity/Resistivity, Salinity, Temperature, Pressure, Level, Dissolved Oxygen, and devices that transmit a 4 to 20 mA signal with the use of the 8058 iGo® Signal Converter.

The 9950 includes advanced features such as derived functions, advanced multiple relay modes, and timer based relay functions. Derived function allows for the control of a relay or current loop with the sum, delta (difference), or ratio of two measurements, for example delta pressure and delta temperature. Multiple relay modes allow up to three signals to be used for the control of a single relay. This can be any combination of analog and binary inputs. The timer relay modes allow a relay to be activated on a repeating basis from every minute to once every 30 days. Weekday timer mode allows a relay to be energized on a specific day or days of the week at a specific time.

The 3-9950.393-3 Relay Module includes the ability to interface up to four binary inputs. The binary inputs are compatible with either open collector or mechanical contacts. The binary inputs can supply power to the four inputs or accepts powered outputs from external devices. These inputs can be used with level switches, flow switches, pressure switches or other devices. The inputs can be used to directly control the relays of the 9950 or can be used in combination with the measurement readings for advanced control of your process.

The 9950 supports the following relay modules:

- Four Channel Mechanical Relay Module
- Two Mechanical and Two Solid State Relay Module
- Two Mechanical Relays and Four Binary Inputs Module

The 9950 supports single or dual channel direct conductivity modules for conductivity, resistivity or salinity measurements.

A dual channel 4 to 20 mA passive output module is available. This will allow expansion from a base of 2 current loop outputs to a maximum of 6 current loop outputs in a single transmitter.

The 9950 Modbus Module allows for remote access to measurements, derived functions, state of current loop outputs and relays over a serial RS485 Modbus automation network.

Features

- **One instrument for multiple sensor types**
- **Multiple language support for Simplified Chinese, English, French, German and Spanish**
- **Two different sensor types can be combined in one instrument**
- **Configurable display**
- **Derived measurements**
- **Advanced boolean logic**
- **Single and Dual Channel Direct Conductivity/ Resistivity Modules**
- **Two passive, 4 to 20 mA current loop outputs in base unit, four additional current loops via optional modules**
- **Optional Dual Channel, passive 4 to 20 mA Current Loop Module for 2 or 4 additional loop outputs**
- **USB Port for Field Upgrades using standard USB Flash Drive**
- **Modbus Module for connections to Serial RS485 automation networks**

Applications

- **Wastewater Treatment**
- **Reverse Osmosis**
- **Deionization**
- **Chemical Manufacturing / Addition**
- **Metal and Plastic Finishing**
- **Fume Scrubber**
- **Cooling Towers**
- **Media Filtration**
- **Chemical Dosing/ Injection**
- **Aquatic Life Support**
- **Pools & Fountains**
- **Rinse Tanks**
- **Chemical Neutralization**

Specifications

General		
Input Channels	(2) frequency or S^3L inputs, or optional direct conductivity modules, maximum of (2) channels	
Enclosure and Display		
Case Material	PBT	
Window	Shatter-resistant glass	
Keypad	4 buttons, injection-molded silicone rubber seal	
Display	Dot matrix, LCD	
Indicators	(2) horizontal digital bar graphs, (4) LED relay status indicators	
Update Rate	1 s	
LCD Contrast	5 settings	
Size	¼ DIN	
Mounting		
Panel	¼ DIN, ribbed on four sides for panel mounting clip inside panel, silicon gasket included	
Wall	Wall Mount enclosure (sold as an accessory)	
Terminal Blocks		
Pluggable Screw Type	Use minimum 105 °C rated wire	
Torque Ratings		
	Power/Loop	0.49 Nm (4.4 lb-in.)
	Freq/S^3L	0.49 Nm (4.4 lb-in.)
	Relay Module	0.49 Nm (4.4 lb-in.)
Connector Wire Gauge		
	Power, Loop	12 to 28 AWG
	Freq/S^3L	16 to 28 AWG
Relay Module Connector Wire Gauge		
	Relay	12 to 28 AWG
Environmental		
Ambient Operating Temperature		
DC Power	-10 °C to 70 °C	14 °F to 158 °F
AC Power	-10 °C to 60 °C	14 °F to 140 °F
Storage Temp	-15 °C to 70 °C	5 °F to 158 °F
Relative Humidity	0 to 100% condensing for (front only); 0 to 95% non-condensing (rear panel)	
Maximum Altitude	4,000 m (13,123 ft)	
Enclosure Rating	NEMA 4X/IP65 (front face only)	
Performance Specifications		
System Accuracy	Primarily dependent upon the sensor	
System Response	Primarily dependent upon the sensor. Controller adds a maximum of 150 ms processing delay to the sensor electronics.	
	Minimum update period is 100 ms	
	System response is tempered by the display rate, output averaging and sensitivity feature	

Raw Conductivity/Resistivity input directly from Signet Conductivity/Resistivity electrodes via Direct Conductivity/Resistivity Module or via 2850

Specifications (continued)

Electrical Requirements	
Power to Sensors	
Voltage	+4.9 to 5.5 VDC @ 25 °C, regulated
Current	30 mA Maximum
Short Circuit	Protected
Isolation	Low voltage (< 48 V AC/DC)
Power Requirements	
DC (3-9950-1, 3-9950-2)	24 VDC nominal (12 to 32 VDC, ±10% regulated), UL 60950-1 or UL 61010-1 Power Supply rated for operation at 4000 m altitude
AC (3-9950-2)	100 to 240 VAC, 50 to 60 Hz, 24 VA
Maximum Current	200 mA (without optional relay module)*
	500 mA (with optional relay module)*
*The current draw of the other modules and the sensors are minimal	
Current Loop	12 to 32 VDC, ±10% regulated, 4 to 20 mA (30 mA max.)
Overvoltage Protection	48 Volt Transient Protection Device (for DC ONLY)
Current limiting for circuit protection	
Reverse-voltage protection	
Input Types	
Digital (S^3L) or AC frequency	
4 to 20 mA input via the 3-8058-1 iGo Signal Converter. **Note:** The 9950 is not compatible with the 3-8058-2 Dual Channel iGo device.	
Open Collector	
pH/ORP input via the Digital (S^3L) output from the 2750 pH/ORP Sensor Electronics or 2751 pH/ORP Smart Sensor Electronics	
Conductivity/Resistivity via the Digital (S^3L) output from the Direct Conductivity Module or 2850 Conductivity/Resistivity Sensor Electronics. **Note:** The 9950 is not compatible with the 3-2850-63 Dual Channel Conductivity device	
Sensor Types	Flow, pH/ORP, Conductivity/Resistivity, Pressure, Temperature, Level/Volume, Salinity, Dissolved Oxygen, Other (4 to 20 mA)
Sensor Input Specifications	
Digital (S^3L)	Serial ASCII, TTL level, 9600 bps
Frequency Flow Sensors	0.5 to 1500 Hz
Sensitivity (for coil type sensors)	80 mV @ 5 Hz, gradually increasing with frequency to 2.5 V
Freq. Range (for square wave type sensors)	0.5 Hz to 1500 Hz @ TTL level input or open collector
K-Factor Range	0.0001 to 9999999
Accuracy	± 0.5% of reading max error @ 25 °C
Resolution	1 µs
Repeatability	± 0.2% of reading
Power Supply	
Rejection	No Effect ± 1 µA per volt
Short Circuit	Protected
Reverse Polarity	Protected
Update Rate	(1/frequency) + 100 ms
Direct Conductivity Module - 3-9950.394-1 and 3-9950.394-2	
Accuracy	Conductivity +/- 2% of Reading
	Temperature 0.5 °C
Resolution	Conductivity 0.1% of Reading
	Temperature <0.2 °C
Update Rate	2.5 Seconds Single Channel, 5 Seconds Dual Channel
Compatible Electrodes	All GF Signet Sensors

Specifications (continued)

Binary Input (3-9950.393-3)			
Input Voltage Range (without damage)	-5 VDC to 30 VDC (No operation below 0 VDC)		
Max. Current Rating	6.0 mA		
Max. Voltage Rating	30 VDC		
Maximum Input Voltage for signal "Off" (low or "0")	1.5 VDC		
Minimum Input Voltage for signal "On" (high or "1")	3.0 VDC		
Maximum Current Draw for Signal "0" (low)	≤ 500 µA DC		
Minimum Current Draw for Signal "1" (high)	500 µA		
Typical Current Draw for Signal "1" (high)	6.0 mA at 30 VDC, 4.8 mA at 24 VDC, 2.4 mA at 12 VDC, 1.0 mA at 5 VDC		
Current Loop Specifications			
Current Loop Out	ANSI-ISA 50.00.01 Class H (passive, external voltage required)		
Voltage	12 to 32 VDC, ±10% regulated, UL 60950-1 or UL 61010-1 Power Supply rated for operation at 4000 m altitude		
Max. Impedance	250 Ω @ 12 VDC	500 Ω @ 18 VDC	750 Ω @ 24 VDC
Span	3.8 to 21 mA		
Accuracy	± 32 µA max. error @ 25 °C @ 24 VDC		
Resolution	6 µA or better		
Temp. Drift	± 1 µA per °C		
Isolation	Low voltage (< 48 VAC/DC)		
Update Rate	100 mS nominal		
Zero	4.0 mA factory set; user programmable from 3.8 to 5.0 mA		
Full Scale	20.0 mA factory set; user programmable from 19.0 to 21.0 mA		
Power Supply Rejection	± 1 µA per V		
Actual Update Rate Determined by Sensor Type			
Short Circuit and Reverse Polarity Protected			
Adjustable Span, Reversible			
Error Condition	Selectable error condition 3.6 or 22 mA or None		
Test Mode	Increment to desired current (range 3.8 to 21.00 mA)		
Analog Outputs	2 Passive 4 to 20 mA Outputs in Base Unit or 2 or 4 passive current loops by optional module(s)		
Relay Specifications			
Dry-Contact Relays (3-9950.393-1, 3-9950.393-2, and 3-9950.393-3)			
Type	SPDT		
Form	C		
Max. Voltage Rating	30 VDC or 250 VAC		
Max. Current Rating	5 A resistive		
Solid-State Relays (3-9950.393-2)			
Type	SPDT		
Form	C		
Max. Voltage Rating	30 VDC or 30 VAC		
Max. Current Rating	0.050 A resistive		
Hysteresis	Adjustable (absolute in Engineering Units)		
On Delay	9999.9 seconds (max)		
Cycle Delay	99999 seconds (max)		
Test Mode	Set On or Off		
Maximum Pulse Rate	0 to 300 pulses/minute		
Proportional Pulse	0 to 300 pulses/minute		
Volumetric Pulse Width	0.1 to 3200 s		
PWM Period	0.1 to 320 s		

Specifications (continued)

Display Ranges		
pH	-1.00 to 15.00 pH	
pH Temperature	-99 °C to 350 °C	-146 °F to 662 °F
ORP	-1999 to +1999.9 mV	
Flow Rate	-9999 to 99999 units per second, minute, hour or day	
Totalizer	0.00 to 99999999 units	
Conductivity	0.0000 to 99999 µS, mS, PPM and PPB (TDS), kΩ, MΩ	
Cond. Temp.	-99 °C to +350 °C	-146 °F to 662 °F
Temperature	-99 °C to +350 °C	-146 °F to 662 °F
Pressure	-40 to 1000 psi	
Level	-9999 to +99999 m, cm, ft, in, %	
Volume	0 to 99999 cm^3, m^3, in^3, ft^3, gal, L, lb, kg, %	
Salinity	0 to 100 PPT	
Dissolved Oxygen	0 to 50 mg/L, 0 to 200%	
Shipping Weights		
Base Unit	0.63 kg	1.38 lb
Relay Module	0.19 kg	0.41 lb
Single Channel Module	0.075 kg	0.16 lb
Dual Channel Module	0.075 kg	0.16 lb
Modbus Module	0.075 kg	0.16 lb
Standards and Approvals		
	CE, UL, CUL, FCC	
	RoHS Compliant, China RoHS	
	Manufactured under ISO 9001 and ISO 14001 for Environmental Management and OHSAS 18001 for Occupational Health and Safety	

Dimensions

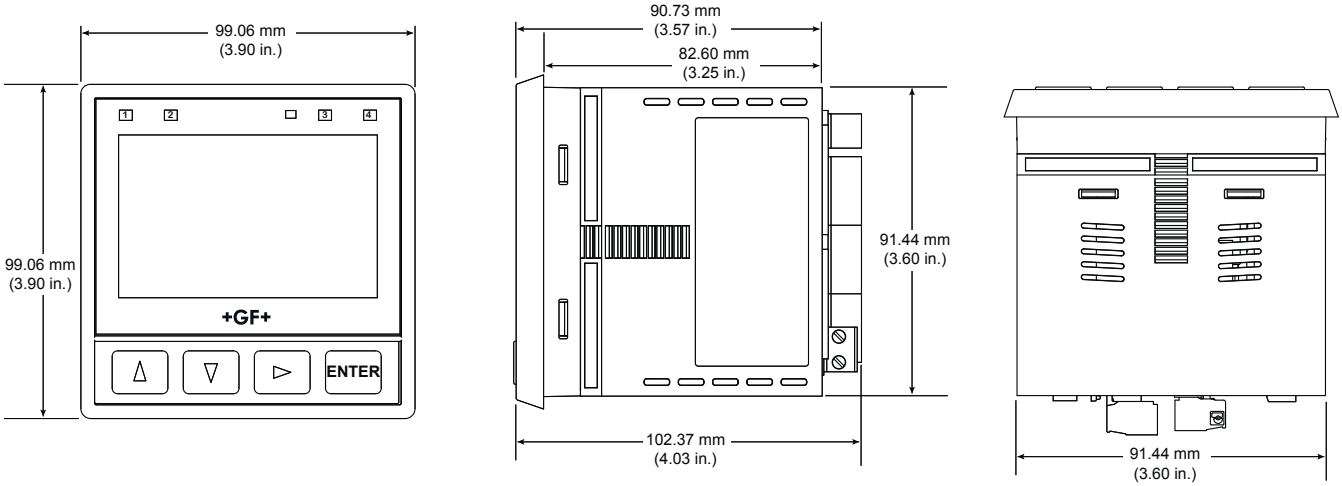

Graphical User Interface created with emWin licensed by SEGGER

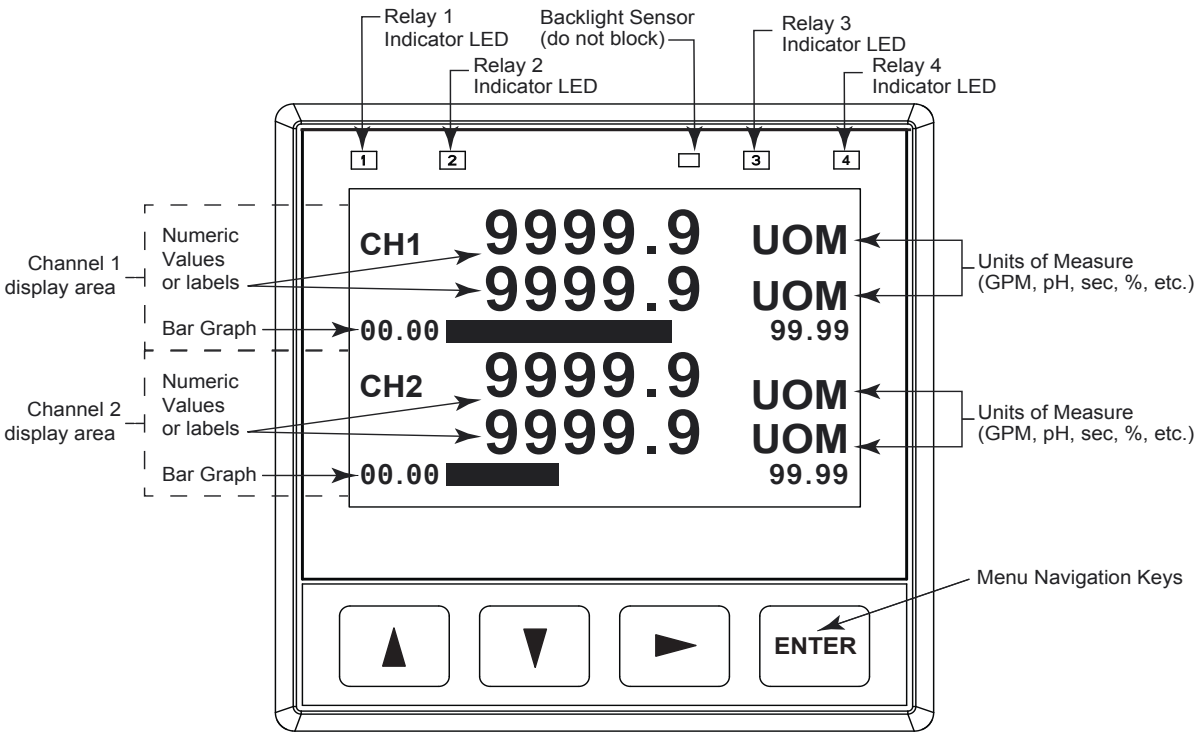

The 9950 is compatible with all GF Signet products listed in the column to the right.

- pH and ORP electrodes require the Signet 2750 or 2751 DryLoc® Sensor Electronics (sold separately).
- Conductivity/Resistivity or measurement requires the Signet 2850 Conductivity/Resistivity Sensor Electronics (sold separately).

Sensor Model	Freq Output	Digital (S^3L) Output	Requires 8058
515/8510	X		
525	X		
2000	X		
2100	X		
2250		X	
2350		X	
2450		X	
2507	X		
2536/8512	X		
2537-5		X	
2540	X		
2551	X	X	
2552	X	X	
2580	X	X	
U1000	X		X
U3000	X		X
U4000	X		X
2260			X
2270			X
2290			X
2291			X
2610-51		X	
2724-2726		X	
2734-2736		X	
2750, 2751		X	
2756-2757		X	
2764-2767		X	
2774-2777		X	
2819-2823		X	
2839-2842		X	
2850		X	

Binary Input compatible sensors. For use with
3-9950.393-3 Relay Module

Sensor Model	Binary Input
2280	X
2281	X
2282	X
2284	X
2285	X

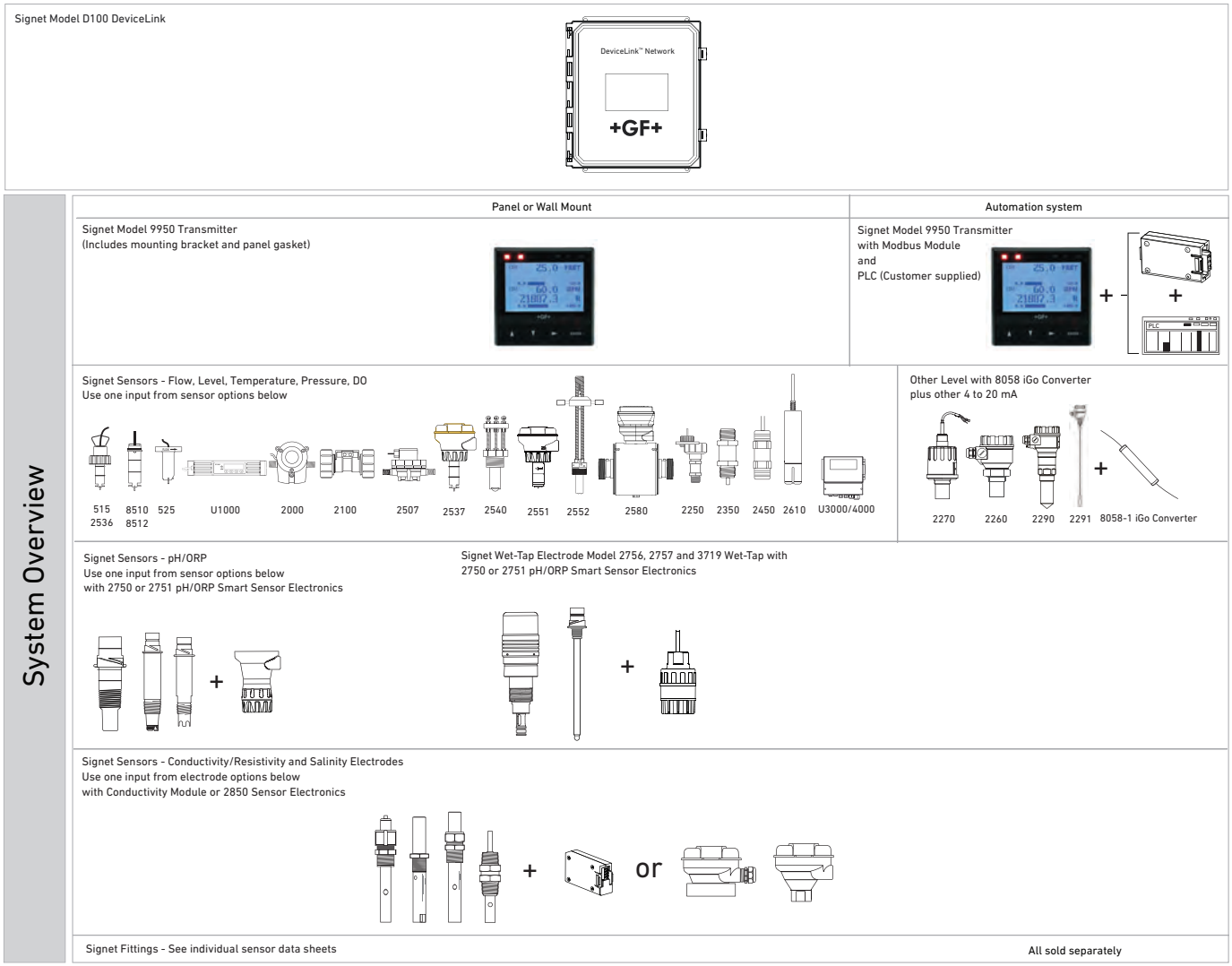

Ordering Information

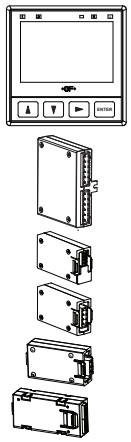

Mfr. Part No	Code	Description
9950 Base Unit - Dual Channel, Multi-Parameter, AC Power and DC Power		
3-9950-1	**159 001 841**	9950 Base Unit – Two Channel Multi-Parameter Inputs, Two 4 to 20 mA Outputs, Panel Mount, DC Power
3-9950-2	**159 001 842**	9950 Base Unit – Two Channel Multi-Parameter Inputs, Two 4 to 20 mA Outputs, Panel Mount, AC or DC Power
Optional Accessory Modules		
3-9950.393-1	**159 310 268**	Relay Module with 4 Mechanical Relays
3-9950.393-2	**159 310 269**	Relay Module with 2 Mechanical and 2 Solid State Relays
3-9950.393-3	**159 310 270**	Relay Module with 2 Mechanical Relays and 4 Binary Inputs
3-9950.394-1	**159 001 846**	Single Channel Direct Conductivity/Resistivity Module
3-9950.394-2	**159 001 847**	Dual Channel Direct Conductivity/Resistivity Module
3-9950.395-M	**159 001 905**	Modbus Module
3-9950.398-2	**159 001 848**	Dual Channel 4 to 20 mA Current Loop Output Module

Accessories and Replacement Parts

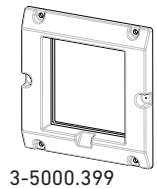

3-5000.399

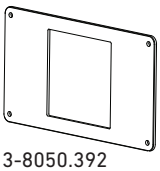

3-8050.392

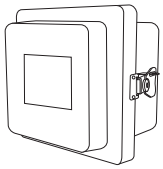

3-9900.392

Mfr. Part No	Code	Description
3-5000.399	**198 840 224**	5 x 5 inch Retrofit Adapter
3-8050.392	**159 000 640**	CR200 ¼ DIN Retrofit Adapter
3-8050.396	**159 000 617**	RC Filter Kit (for relay use), 2 per kit
3-8058-1	**159 000 966**	i-Go® Signal Converter, wire-mount
3-9950.391	**159 310 278**	Connector Kit, In-Line, 9950 Transmitter
3-9950.392	**159 310 279**	Relay Module Connector Kit, 9950 Transmitter
3-9900.392	**159 001 700**	Wall Mount Enclosure Kit **(Order number is 150 300 351)**
3-9000.392-1	**159 000 839**	Liquid Tight Connector Kit, NPT (1 pc.)

Signet 9900 Transmitter

Member of the SmartPro® Family of Instruments

Panel Mount Field Mount

The Signet 9900 Transmitter provides a single channel interface for many different parameters including Flow, pH/ORP, Conductivity/Resistivity, Salinity, Pressure, Temperature, Level, Dissolved Oxygen, and other sensors that output a 4 to 20 mA signal. The 9900-1P Transmitter can also be used as a Batch Controller when a Batch Module and Relay Module are installed.

The 9900 is offered in both panel or field mount versions. Both configurations offer an extra large (3.90" x 3.90") auto-sensing backlit display features "at-a-glance" visibility that can be viewed at 4-5 times the distance over traditional transmitters. The highly illuminated display and large characters reduce the risk of misreading or misinterpreting the displayed values. The display shows separate lines for units, main and secondary measurements as well as a "dial-type" digital bar graph.

The 9900 can run on 12 to 32 VDC power (24 VDC nominal), and can also be loop powered with compatible sensors.

Rear Enclosure kits are available for the 9900-1P Panel Mount. Kit options include either a Hinged Cover (3-9900.399-1) for wall or pipe mount installations, or a Flat Cover (3-9900.399-2) designed to fit inside a panel for waterproof protection.

The 9900 offers complete flexibility, plug-in modules allow the unit to easily adapt to meet changing customer needs. Optional modules include the new Modbus as well as the Relay, Direct Conductivity/Resistivity, H COMM, Batch, 4 to 20 mA Output, and a PC COMM Configuration Tool. The unit can be used with default values for quick and easy programming or can be customized with labeling, adjustable minimum and maximum dial settings, and unit of measure and decimal location choices.

Features

- **Modbus Module supports RS485 Serial Modbus Communications**
- **Multiple sensor types supported with one instrument**
- **"Dial-type" digital bar graph**
- **Modules are field installable and replaceable anytime**
- **Optional Relay Module for addition of two dry contact relays**
- **Optional H COMM Module for two-way communication**
- **Optional Batch Module for Batch Control**
- **Modbus Module for connection to Serial, RS485, Modbus networks**
- **One 4 to 20 mA output in base unit. One additional 4 to 20 mA available with optional module**
- **Rear Enclosure kits for panel, wall or pipe mounting**
- **Warning and Relay LED indicators for "at a glance" visibility**
- **Customizable features including digital label for custom identification**
- **Optional PC COMM configuration tool for configuration at a PC**

Applications

- **Wastewater Treatment**
- **Reverse Osmosis**
- **Deionization**
  - **Ultra Pure Water**
  - **Two Bed System**
  - **Mixed Bed System**
- **Chemical Manufacturing/Addition**
- **Metal and Plastic Finishing**
- **Fume Scrubber**
- **Cooling Towers**
- **Media Filtration**

U.S. Patent Nos.: D662,844 S, D622,845 S
Taiwan Patent Nos.: D147,149, D147,150

Specifications

General			
Input Channels		One	
Input Types	Digital (S^3L)	Serial ASCII, TTL level, 9600 bps	
	Frequency	Range	0.5 to 1500 Hz
		Accuracy	0.5% of reading
Measurement Types		Flow, pH/ORP, Conductivity/Resistivity, Salinity, Pressure, Temperature, Level, Dissolved Oxygen, Batch or user-defined (via 8058)	
Enclosure and Display			
Case Material		PBT	
Window		Shatter-resistant glass	
Keypad		4 buttons, injection-molded silicone rubber seal	
Display		Backlit, 7 and 14-segment	
Update Rate		1 s	
LCD Contrast		5 settings	
Indicators		"Dial-type" digital bar graph. LEDs for Open Collector, Relays and Warning Indicator	
Enclosure Size		¼ DIN	
Mounting	9900-1P		
	Panel	¼ DIN, ribbed on four sides for panel mounting clip inside panel, silicon gasket included. Optional rear enclosure with flat cover available for waterproof protection when installed inside a panel.	
	Wall	Options include 9900-1P installed in pre-wired NEMA enclosure, wall mount enclosure or inside of rear enclosure with hinged cover. (USA Only)	
	Pipe	Optional Rear Enclosure with hinged cover and 9900-1P for pipe mount installation	
Mounting	9900-1		
	Field (Integral)	Options include yellow universal or integral kits for installation with sensor	
Display Ranges			
pH		0.00 to 15.00 pH	
pH Temperature		-39.99 °C to 149.99 °C	-40 °F to 302 °F
ORP		-1999 to +1999 mV	
Flow Rate		-9999 to 99999 units per second, minute, hour or day	
Totalizer		0.00 to 99999999 units	
Conductivity		0.0000 to 99999 µS, mS, PPM and PPB (TDS), kΩ, MΩ	
Conductivity Temperature		-100 °C to 250 °C	–148 °F to 350 °F (application and sensor dependent)
Temperature		-99 °C to 350 °C	–99 °F to 350 °F
Pressure		-40 to 1000 psi	
Level		-9999 to 99999 m, cm, ft, in, %	
Volume		0 to 99999 cm^3, m^3, in^3, ft^3, gal, L, lb, kg, %	
Salinity		0 to 99.97 PPT	
Dissolved Oxygen		PPM 0-50, % SAT 0-200, 0 to 999.9 TORR	
Dissolved Oxygen Temperature		-99 °C to 350 °C	–99 °F to 350 °F
Environmental			
Ambient Operating Temperature			
Backlit LCD		-10 °C to 70 °C	14 °F to 158 °F
Storage Temperature		-15 °C to 70 °C	5 °F to 158 °F
Relative Humidity		0 to 100% condensing for field mount; 0 to 95% non-condensing for panel mount	
Maximum Altitude		4,000 m (13,123 ft)	
Enclosure Rating		NEMA 4X/IP65 (front face only on panel mount); field mount is 100% NEMA 4X/IP65 when used with universal or integral installation kits	

Specifications (continued)

Electrical Requirements				
Power to Sensors				
Voltage		+4.9 to 5.5 VDC @ 25 °C, regulated		
Current		1.5 mA max in loop power mode (up to 2.0 mA with 24 V @ 300 Ω max. loop impedance); 20 mA max when using DC power		
Short Circuit		Protected		
Isolation		Low voltage (< 48V AC/DC) to loop with DC power connected		
No isolation when using loop power only				
Terminal Blocks		Pluggable screw type		14 AWG max wire gauge
Input Power				
DC		10.8 to 35.2 VDC, regulated		
9900 without Relay Module		200 mA @ 10.8 VDC to 35.2 VDC		
9900 with Relay Module		300 mA @ 10.8 VDC to 35.2 VDC		
Overvoltage Protection		48 Volt Transient Protection Device		
Current limiting for circuit protection				
Reverse-Voltage Protection				
Loop Power				
Loop Power Only				
	Max. Loop Impedance	50 Ω @ 12 V	325 Ω @ 18 V	600 Ω @ 24 V
With DC Power Input or with 2nd loop, all the time				
	Max. Loop Impedance	250 Ω @ 12 V	500 Ω @ 18 V	750 Ω @ 24 V
Relay Specifications				
		Dry-Contact Relays (2)	Open Collector (1)	
Type		SPDT	N/A	
Form		C	N/A	
Max. Current Rating		5 A resistive	50 mA DC	
Max. Voltage Rating		30 VDC or 250 VAC	30 VDC	
Hysteresis		Adjustable (absolute in engineering units) (EUs)		
Latch		Reset in test screen only		
Delay		9999.9 seconds (max.)		
Test Mode		Set On or Off		
Cycle Time		99999 seconds (max.)		
Maximum Pulse Rate		300 pulses/minute		
Proportional Pulse		400 pulses/minute		
Volumetric Pulse Width		0.1 to 3200 s		
Pulse Width Modulation		0.1 to 320 s		
Input Types				
Digital (S^3L) or AC frequency				
4 to 20 mA input via the 8058-1				
pH/ORP input via the Digital (S^3L) output from the 2750/2751 pH/ORP Sensor Electronics				
Raw Conductivity/Resistivity input directly from Signet Conductivity/Resistivity electrodes via Direct Conductivity/ Resistivity Module or via 2850				
Input Specifications				
Digital (S^3L)		Serial ACSII, TTL level, 9600 bps		
Frequency Input				
	Sensitivity	80 mV @ 5 Hz, gradually increasing with frequency		
	Span	0.5 Hz to 1500 Hz @ TTL level input		
	Accuracy	± 0.5% or reading max error @ 25 °C		
	Resolution	1 µS		
	Repeatability	± 0.2% of reading		

Specifications (continued)

Input Specifications continued				
Power Supply				
	Rejection	±1 µA per volt		
	Short Circuit	Protected		
Update Rate		(1/frequency) + 150 ms		
Direct Conductivity/Resistivity Module (3-9900.394)				
	Accuracy	Conductivity +/- 2% of Reading		
		Temperature 0.5 °C		
	Resolution	Conductivity 0.1% of Reading		
		Temperature <0.2 °C		
	Update Rate	2.5 Seconds		
	Compatible Electrodes	All GF Signet Sensors		
Output Specifications				
Current Output - One (1); Two (2) with 4 to 20 mA Output Module				
	Current Loop Output Standard	ANSI-ISA 50.00.01 Class H		
	Current Output	4 to 20 mA, isolated, fully adjustable and reversible		
	Span	3.8 to 21 mA		
	Zero	4.0 mA factory set; user programmable from 3.8 to 5.0 mA		
	Full Scale	20.00 mA factory set; user programmable from 19.0 to 21.0 mA		
	Accuracy	±32 µA max. error @ 25 °C @ 24 VDC		
	Resolution	6 µA or better		
	Temperature Drift	±1 µA per °C		
	Power Supply Rejection	±1 µA per V		
	Isolation	Low voltage (< 48 VAC/DC)		
	Voltage	12 to 32 VDC ±10%		
	Max. Impedance (with DC power input)	250 Ω @ 12 VDC	500 Ω @ 18 VDC	750 Ω @ 24 VDC
	Max. Impedance (no DC power input)	50 Ω @ 12 VDC	325 Ω @ 18 VDC	600 Ω @ 24 VDC
	Update Rate	150 mS nominal		
	Short circuit and reverse polarity protected			
	Adjustable Span	Reversible		
	Error Condition	Selectable error condition 3.6 or 22 mA		
	Actual update rate determined by sensor type			
	Test Mode	Increment to desired current (range 3.8 to 21.00 mA)		
Shipping Weights				
Base Unit		0.63 kg	1.38 lb	
Modbus Module		0.16 kg	0.35 lb	
H COMM Module		0.16 kg	0.35 lb	
Conductivity Module		0.16 kg	0.35 lb	
Relay Module		0.19 kg	0.41 lb	
Batch Module		0.16 kg	0.35 lb	
4 to 20 Output Module		0.16 kg	0.35 lb	
Rear Enclosure, Hinged Cover		0.30 kg	0.65 lb	
Rear Enclosure, Flat Cover		0.28 kg	0.60 lb	
Standards and Approvals				
		CE, UL, CUL, FCC		
		RoHS Compliant, China RoHS		
		Lloyd's Register		
		Manufactured under ISO 9001 and ISO 14001 for Environmental Management and OHSAS 18001 for Occupational Health and Safety		

Dimensions - Panel Mount

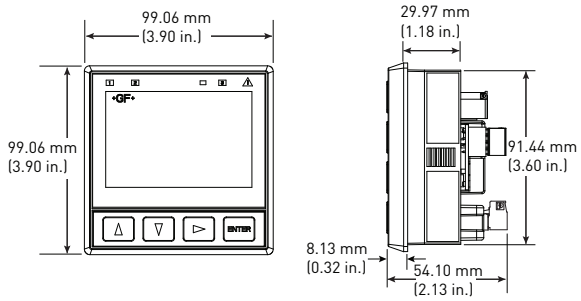

Dimensions - Rear Enclosure

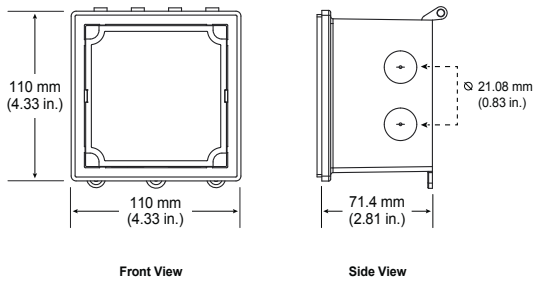

Integral Mount

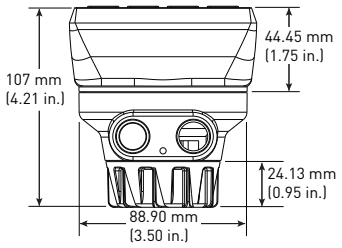

3-9900.396
Angle Adjustment Adapter Kit

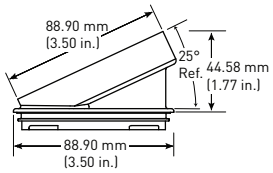

Hinged Cover

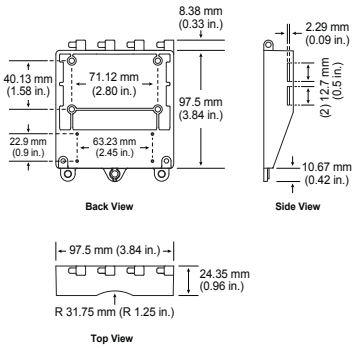

Flat Cover

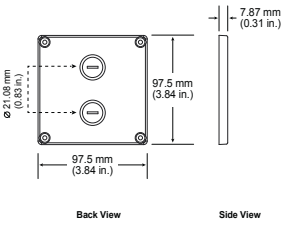

Sensor model	9900 Generation			
	I	II	III	IV
515/8510	X	X	X	X
525	X	X	X	X
2000	X	X	X	X
2100	X	X	X	X
2250	X	X	X	X
2350	X	X	X	X
2450	X	X	X	X
2507	X	X	X	X
2536/8512	X	X	X	X
2537-5	X	X	X	X
2540	X	X	X	X
2551	X	X	X	X
2552	X	X	X	X
2580	X	X	X	X
2610-51			X	X
2610 + 8058	X	X		
2724-2726	X	X	X	X
2734-2736	X	X	X	X
2750	X	X	X	X
2751	X	X	X	X
2756-2757	X	X	X	X
2764-2767	X	X	X	X
2774-2777	X	X	X	X
2819-2823	X	X	X	X
2839-2842	X	X	X	X
2850	X	X	X	X
U1000	X	X	X	X
U3000/U4000	X	X	X	X

9900 Module	9900 Generation			
	I	II	III	IV
H COMM	X	X	X	X
Relay	X	X	X	X
Conductivity/Resistivity	X	X	X	X
Batch		X	X	X
4 to 20 mA Output			X	X
Modbus	X	X	X	X

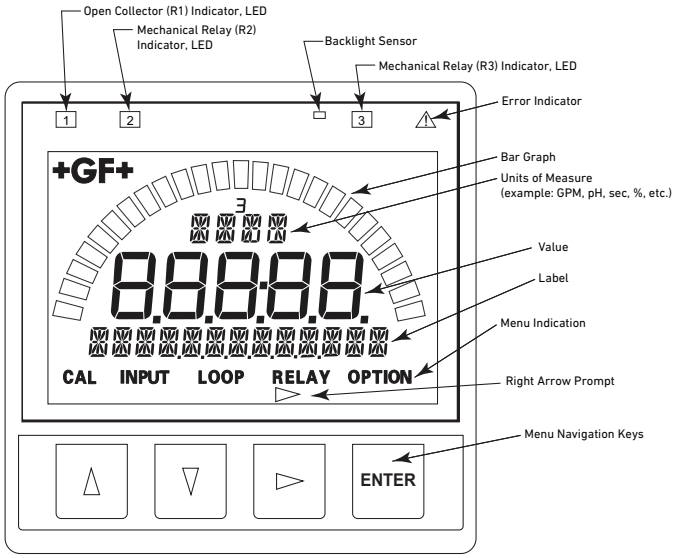

All possible segments shown in this illustration. The instrument's software controls which segments are shown at any particular time. Only the bar graph segment outline and GF logo are visible when the unit is turned off.

System Overview

Signet Model D100 DeviceLink

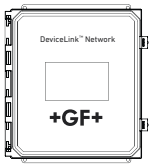

Panel Mount	Pipe, Tank, Wall Mount	Field (Integral) Mount
Signet Model 9900 Transmitter (Includes mounting bracket and panel gasket)	Signet Model 9900 Transmitter with Rear Enclosure	Signet Model 9900 Transmitter with Junction Box (varies with sensor and installation)

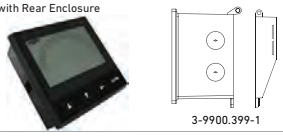

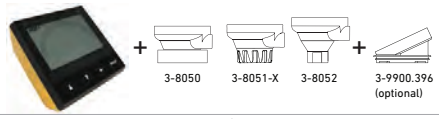

Signet Sensors - Flow, Level, Temperature, Pressure, DO
Use one input from sensor options below

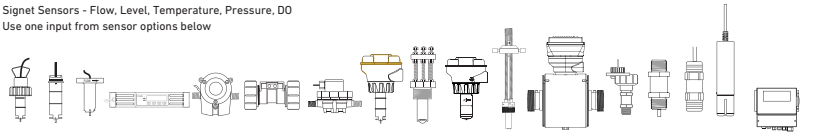

Other Level with 8058 iGo Converter plus other 4 to 20 mA

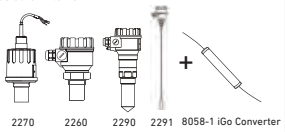

Signet Fittings - See individual sensor data sheets

All sold separately

Panel Mount	Pipe, Tank, Wall Mount	Field (Integral) Mount
Signet Model 9900 Transmitter (Includes mounting bracket and panel gasket)	Signet Model 9900 Transmitter with Rear Enclosure	Signet Model 9900 Transmitter with Junction Box (varies with sensor and installation)

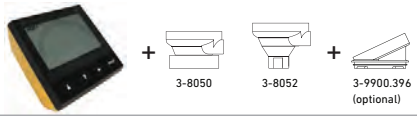

Signet Sensors - pH/ORP
Use one input from sensor options below*
with 2751 Smart Sensor Electronics

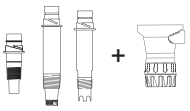

Signet Wet-Tap Electrode Model 2756, 2757 and 3719
Wet-Tap with 2751 Smart Sensor Electronics

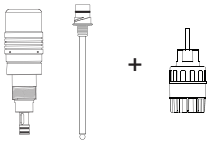

Signet Fittings - See individual sensor data sheets

All sold separately

Panel Mount	Pipe, Tank, Wall Mount	Field (Integral) Mount
Signet Model 9900 Transmitter (Includes mounting bracket and panel gasket)	Signet Model 9900 Transmitter with Rear Enclosure	Signet Model 9900 Transmitter with 3-9900.396 Angle Adapter and Junction Box (varies with sensor and installation)

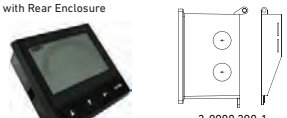

Signet Sensors - Conductivity/Resistivity and Salinity Electrodes
Use one input from electrode options below*
with Conductivity Module or 2850 Sensor Electronics

Signet Fittings - See individual sensor data sheets

All sold separately

* See individual sensor datasheets for additional information
**3-9900.396 is required with the Conductivity Module and either 3-8050 or 3-8052 to provide sufficient clearance

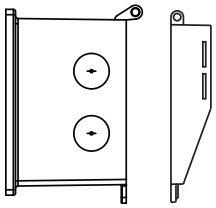

3-9900.399-1 (159 001 834)
Rear Enclosure Kit,
hinged cover

3-9900.399-2 (159 001 835)
Rear Enclosure Kit,
flat cover

3-9900-1 (159 001 696)
Field Mount

3-9900-396 (159 001 701)
Angle Adjustment
Adapter Kit

3-8051 (159 000 187)
3-8051-1 (159 001 755)
3-8051-2 (159 001 756)
Flow Sensor
Integral Mounting Kit

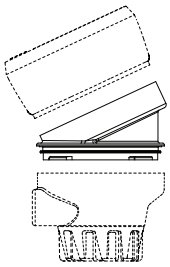

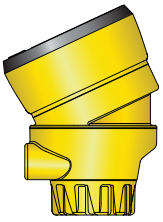

Plug in Modules

Optional modules and accessories are available for the 9900:

a. Base Unit (required)
b. Slot for optional H COMM or Modbus Module
c. Slot for optional Conductivity/ Resistivity, Batch, or 4 to 20 mA Output Module
d. Slot for optional Relay Module (not available on field mount)

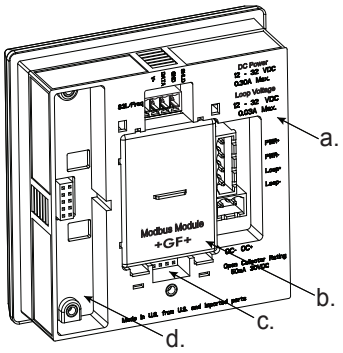

Each item is ordered separately.
Modules are field-replaceable at any time.

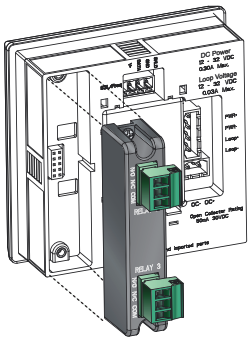

Relay Module (Panel Installations Only) (3-9900.393)
This module adds two programmable dry-contact relays to the standard Open Collector output in the base unit.

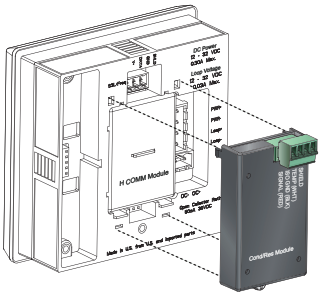

Direct Conductivity/Resistivity Module (3-9900.394)
The Direct Conductivity/Resistivity Module interfaces Signet 2819-2823 and 2839-2842 Conductivity electrodes directly to the 9900.

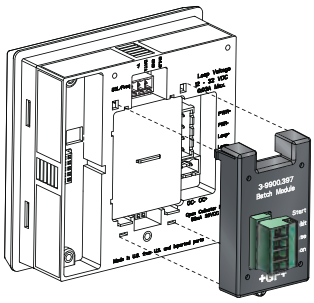

Batch Module (3-9900.397)
The Batch Module adds batch capability to the 9900 Transmitter (Generation II and newer).
It is compatible with all Signet flow sensors.

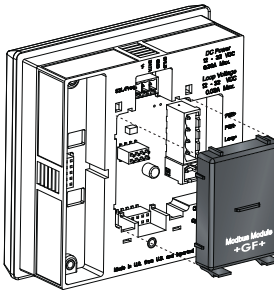

3-9900.270-M2

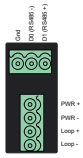

3-9900.270-M4

3-9900.270-M3

Modbus Modules (3-9900.270-MX)
These Modules allow the 9900 to communicate with Automation systems using the Modbus serial RS485 Protocol.
3-9900.270-M2 - Terminal Block Connections (Panel Mount Only)
3-9900.270-M3 - M12 Connector (Field Mount Only)
3-9900.270-M4 - Modbus Module with 5 Wire Cable Assembly

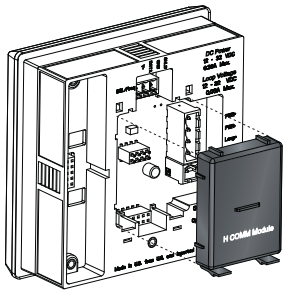

H COMM Module (HART®) (3-9900.395)
The H COMM Module enables communication between the 9900 and a HART® enabled device.
(Not available for use on 3-9900-1BC Batch Controller)

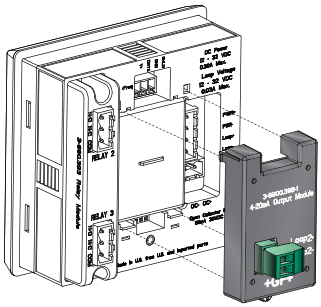

4 to 20 mA Output Module (3-9900.398-1)
The 4 to 20 mA Output Module adds a second 4 to 20 mA Output to the 9900 Transmitter (Generation III and later). Each of the outputs can be used to output the primary and/or secondary measurement.

Ordering Information

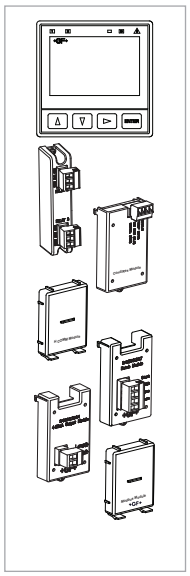

Mfr. Part No	Code	Description
9900 Base Unit - Single Channel, Multi-Parameter, 4 to 20 mA, Open Collector, DC power		
3-9900-1P	**159 001 695**	9900 Panel Mount Transmitter
3-9900-1	**159 001 696**	9900 Field Mount Transmitter
3-9900-1BC	**159 001 770**	Batch Controller System
Optional Accessory Modules		
3-9900.270-M2	**159 200 121**	Modbus Module with Terminal Block Assembly (Panel Mount Only)
3-9900.270-M3	**159 200 122**	Modbus Module with M12 Connector Assembly (Field Mount Only)
3-9900.270-M4	**159 200 128**	Modbus Module with 5 Wire Cable Assembly
3-9900.393	**159 001 698**	Relay Module - 2 DCR (Dry-contact relays)
3-9900.394	**159 001 699**	Direct Conductivity/Resistivity Module
3-9900.395	**159 001 697**	H COMM Module
3-9900.397	**159 310 163**	Batch Module
3-9900.398-1	**159 001 784**	4 to 20 mA Output Module*

*Module adds a second 4 to 20 mA output. One 4 to 20 mA output is included in the base unit.

Accessories and Replacement Parts

Mfr. Part No	Code	Description
6682-0204	**159 001 709**	Conductivity Module Plug, 4 Pos, Right Angle
6682-1102	**159 001 710**	DC Power Plug, 2 Pos, Right Angle
6682-1103	**159 001 711**	Relay Module Plug, 3 Pos, Right Angle
6682-1104	**159 001 712**	Loop Power Plug, 4 Pos, Right Angle
6682-3104	**159 001 713**	Freq/S^3L Plug, 4 Pos, Right Angle
6682-3004	**159 001 725**	Terminal Block Plug
7310-1024	**159 873 004**	24 VDC Power Supply, 0.42 A, 10W
7310-2024	**159 873 005**	24 VDC Power Supply, 1.0 A , 24W
7310-4024	**159 873 006**	24 VDC Power Supply, 1.7 A, 40W
7310-6024	**159 873 007**	24 VDC Power Supply, 2.5 A, 60W
7310-7024	**159 873 008**	24 VDC Power Supply, 4.0 A, 96W
3-0252	**159 001 808**	0252 Configuration Tool
3-8050	**159 000 184**	Universal Mount Kit
3-8050.396	**159 000 617**	RC Filter Kit (for relay use), 2 per kit
3-8051	**159 000 187**	Flow Sensor Integral Mounting Kit, NPT, Valox
3-8051-1	**159 001 755**	Flow Sensor Integral Mounting Kit, NPT, PP
3-8051-2	**159 001 756**	Flow Sensor Integral Mounting Kit, NPT, PVDF
3-8052	**159 000 188**	¾ in. Integral Mount Kit
3-8058-1	**159 000 966**	I-Go® Signal Converter, wire-mount
3-8058-2	**159 000 967**	I-Go® Signal Converter, DIN rail mount
3-9000.392-1	**159 000 839**	Liquid Tight Connector Kit, NPT (1 pc.)
3-9900.270-CB1	**159 200 123**	Replacement Wire Cable Assembly for M1
3-9900.270-CB2	**159 200 124**	Replacement Terminal Block Assembly for M2
3-9900.270-CB3	**159 200 125**	Replacement M12 Connector Assembly for M3
3-9900.270-CB4	**159 200 129**	Replacement Cable Assembly for M4
3-9900.390	**159 001 714**	Standard Connector Kit, Right Angle, 9900 Transmitter
5541-5005	**159 855 021**	5 meter (16 ft) M12 cable
5541-5010	**159 855 022**	10 meter (32 ft) M12 cable
3-9900.391	**159 001 715**	Optional Connector Kit, In-Line, 9900 Transmitter
3-9900.392	**159 001 700**	Wall Mount Accessory Kit for 9900
3-9900.396	**159 001 701**	Angle Adjustment Adapter Kit (for Field Mounting)
3-9900.399-1	**159 001 834**	Rear enclosure kit, hinged cover
3-9900.399-2	**159 001 835**	Rear enclosure kit, flat cover

Signet 9900-1BC Batch Controller System

Member of the SmartPro® Family of Instruments

The Signet 9900-1BC Batch Controller system provides control capability and process fine-tuning in a familiar package. The programming interface uses a four-button keypad and an intuitive menu for adjusting a batching system to the best performance possible. Choose between simple or advanced modes. In simple mode, relay outputs can be used for batching, external counter, missing signal alarm and 4 to 20 mA output can be used to indicate batch status. In advanced mode relays can also be used for end of batch pulse, two-stage shutdown, overrun alarm, high flow detection, total volume or source volume alarm.

New to Generation IV, Automatic Overrun Compensation feature. The 9900-1BC can measure excess flow after a batch stops and use it to reduce flow to the next batch by de-energizing the batch relay early, thus closing the flow control valve, and eliminating batch overrun.

Designed for a variety of batch applications, the 9900-1BC can save up to 10 batch sizes for batching or blending a variety of liquid volumes. Customize batch names for easy distinction between batches. One K-Factor can be used for all batches, or use a different K-Factor for each batch for when different liquids are batched. User can choose to be prompted prior to starting a batch with a Yes/No or with a password to prevent inadvertently starting a batch.

The 9900-1BC operates on 10.8 to 35.2 VDC, regulated. Connect a remote start or stop switch for remote batch control. Use the end-of-batch pulse to trigger the next step in the process.

Features

- **New Rear Enclosure option means the 9900-1BC Batch Controller can be installed on a pipe or wall mounted in addition to panel mount installations**
- **Store up to 10 batch sizes for batching or blending a variety of liquid volumes**
- **Customize 10 batch names for easy distinction between batches**
- **Modular Design - Can be purchased as a complete system or add a Batch Module and Relay Module to an existing 9900 Transmitter (Generation II or later)**
- **New! Automatic Overrun Compensation can eliminate excess flow by automatically reducing the next batch size by the overrun value of previous batch.**
- **Remote control wiring with start, stop & resume terminals for remote batch control**
- **3 programmable relays, one open collector, two dry-contact relays**
- **Two-stage control to prevent overfilling or to minimize water hammer**
- **Confirmation START/RESUME – Can prompt user prior to starting each batch with a Yes/No or password to prevent inadvertently starting a batch**
- **Enter 10 different K-Factors - one per batch for when different liquids are batched**

LISTED
MEASURING EQUIPMENT
77CJ

Applications

- **Batch Process**
- **Filter Backwash Initiation**
- **Chemical Addition**
- **Canning and Bottling**
- **Tank Filling**
- **Bulk Storage Transfer**
- **Chemical Processing**
- **Food and Beverage**
- **Life Sciences**
- **Water Treatment**

U.S. Patent No.: D662,844 S
Taiwan Patent No.: D147,150

Specifications

General			
Input Channels		One	
Accuracy		±0.2%	
Terminal Blocks		Pluggable screw type	16 AWG max wire gauge
Enclosure and Display			
Case Material		PBT	
Window		Shatter-Resistant Glass	
Keypad		4 buttons, injection-molded silicone rubber seal	
Display		Backlit, 7- and 14-segment	
Indicators		Dial-type digital bar graph	
Update Rate		1 s	
LCD Contrast		5 settings	
Enclosure Size and Color		¼ DIN	
Mounting	Panel	¼ DIN, ribbed on four sides for use with mounting bracket for panel mount installations	
	Wall	Large enclosure (sold as an accessory) that encases the panel mount transmitter or using optional rear enclosure	
	Pipe	Using optional rear enclosure	
Environmental Requirements			
Ambient Operating Temperature			
Backlit LCD		-10 °C to 70 °C	14 °F to 158 °F
Storage Temperature		-15 °C to 70 °C	5 °F to 158 °F
Operating Temperature		-10 °C to 70 °C	14 °F to 158 °F
Relative Humidity		0 to 100% condensing for field and panel mount (front only); 0 to 95% non-condensing for panel mount back side	
Maximum Altitude		4,000 m (13,123 ft)	
Enclosure Rating		Designed to meet NEMA 4X/IP65 (front face only)	
Input Power			
DC		24 VDC input; range: 10.8 to 35.2 VDC, regulated	
Overvoltage Protection		48 Volt transient protection device	
Current limiting for circuit protection			
Reverse-voltage Protection			
Input Specifications			
Digital (S^3L)		Serial ASCII, TTL level, 9600 bps	
Accuracy		Determined by sensor	
Frequency			
	Sensitivity	80 mV @ 5 Hz, mV threshold gradually increasing with frequency	
	Range	0.5 Hz to 1500 Hz @ TTL level input for open collector	
	Accuracy	± 0.5% of reading max error @ 25 °C	
	Repeatability	± 0.2% of reading	
	Resolution	1 µs	
	Update Rate	150 ms nominal	
Power to Sensors			
	Voltage	+4.9 to 5.5 VDC @ 25 °C, regulated	
	Current	20 mA max.	
	Short Circuit	Protected	
Power Supply			
	Reverse Polarity	Protected	

Specifications continued

Output Specifications				
Relay Specifications				
		Dry-Contact Relays (2)	Open Collector (1)	
	Type	SPDT	NPN	
	Form	C	N/A	
	Max. Voltage Rating	30 VDC or 250 VAC	30 VDC	
	Max. Current Rating	5 A	50 mA	
Hysteresis		Adjustable (absolute in Engineering Units)		
Latch		Reset in test screen or view mode		
Delay		9999.9 seconds (maximum)		
Test Mode		Set On or Off		
Maximum Pulse Rate		400 pulses/minute		
Volumetric Pulse Width		0.1 s to 3200 s		
4 to 20 mA Current Loop Output		ANSI-ISA 50.00.01 Class H (passive: external power required)		
	Output	1		
	Span	3.8 to 21 mA		
	Zero	4.0 mA factory set; user programmable from 3.8 to 4.2 mA		
	Full Scale	20.00 mA factory set; user programmable 19.0 to 21.0 mA		
	Accuracy	± 32 µA max. error @ 25 °C @ 24 VDC		
	Resolution	6 µA or better		
	Temperature Drift	± 1 µA per °C		
	Power Supply Rejection	± 1 µA per V		
	Isolation	Low voltage (< 48 VAC/DC)		
	Voltage	10.8 to 35.2 VDC		
	Max. Impedance	250 Ω @ 12 VDC	500 Ω @ 18 VDC	750 Ω @ 24 VDC
	Update Rate	150 ms nominal		
	Short circuit and reverse polarity protected			
	Adjustable span	Reversible		
	Error Condition	Selectable error condition 3.6 or 22 mA or NONE		
	Actual update rate determined by sensor type			
	Test Mode	Increment to desired current (range 3.6 to 21.00 mA)		
Shipping Weights				
Base Unit		0.63 kg	1.38 lb	
Batch Module		0.16 kg	0.35 lb	
Relay Module		0.19 kg	0.41 lb	
Standards and Approvals				
		CE, UL, CUL, FCC		
		RoHS compliant, China RoHS, Made in USA from US and Imported Parts		
		Manufactured under ISO 9001 for Quality, ISO 14001 for Environmental Management and OHSAS 18001 for Occupational Health and Safety		

Dimensions

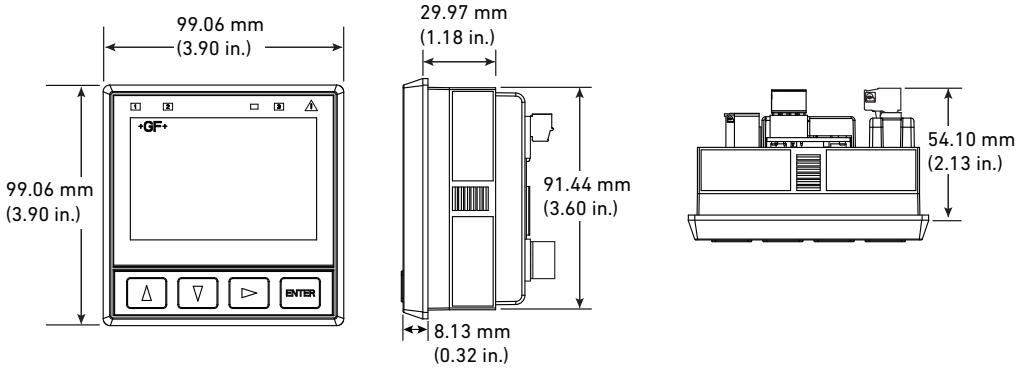

System Overview

Panel Mount	Pipe, Tank, Wall
Signet Model 9900-1BC Batch Controller System (Includes mounting bracket and panel gasket)	**Signet Model 9900-1BC Batch Controller System** with Wall Mount Accessory or Rear Enclosure

Signet Sensors - Flow

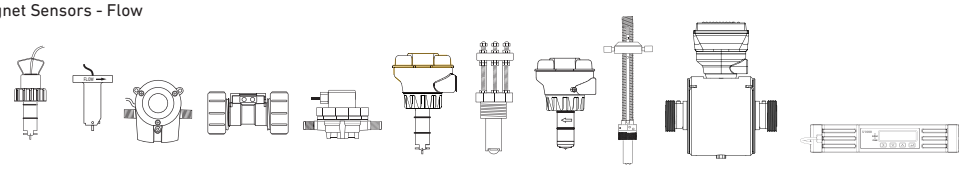

515 2536 | 525 | 2000 | 2100 | 2507 | 2537 | 2540 | 2551 | 2552 | 2580 | U1000

Signet Fittings - See individual sensor data sheets

All sold separately

Ordering Information

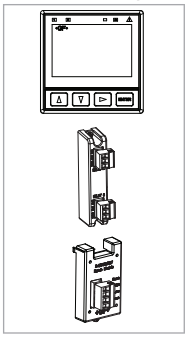

Mfr. Part No.	Code	Description
3-9900-1BC	**159 001 770**	Batch Controller System
3-9900-1P	**159 001 695**	9900 Panel Mount Transmitter
3-9900.393	**159 001 698**	Relay Module - 2 DCR (dry-contact relays)
3-9900.397	**159 310 163**	Batch Module

Accessories and Replacement Parts

Mfr. Part No	Code	Description
6682-1102	**159 001 710**	DC Power Plug, 2 Pos, Right Angle
6682-1103	**159 001 711**	Relay Module Plug, 3 Pos, Right Angle
6682-1104	**159 001 712**	Loop Power Plug, 4 Pos, Right Angle
6682-3004	**159 001 725**	Freq/S^3L Plug, 4 Pos, In-Line
6682-3104	**159 001 713**	Freq/S^3L Plug, 4 Pos, Right Angle
7310-1024	**159 873 004**	24 VDC Power Supply, 10W, 0.42 A
7310-2024	**159 873 005**	24 VDC Power Supply, 24W, 1.0 A
7310-4024	**159 873 006**	24 VDC Power Supply, 40W, 1.7 A
7310-6024	**159 873 007**	24 VDC Power Supply, 60W, 2.5 A
7310-7024	**159 873 008**	24 VDC Power Supply, 96W, 4.0 A
3-8050.396	**159 000 617**	RC Filter Kit (for relay use), 2 per kit with inductive loads
3-9900.390	**159 001 714**	Standard Connector Kit, Right Angle
3-9900.391	**159 001 715**	Connector Kit, In-Line
3-9900.392	**150 300 351**	Wall Mount Accessory Kit for 9900
3-9000.392-1	**159 000 839**	Liquid Tight Connector Kit, NPT (1 pc.)
1223-0151	**159 000 236**	O-ring EPR (EPDM) -151 .103W 2.987ID
3-9900.399-1	**159 001 834**	Rear Enclosure Hinged Cover
3-9900.399-2	**159 001 835**	Rear Enclosure Flat Cover
3-0252	**159 001 808**	Configuration Tool

Signet Rear Enclosure Kit for 9900 Transmitter

Panel Mount Transmitter

Hinged Cover

Flat Cover

Shown with customer supplied conduit fittings

The Signet Rear Enclosure Kit allows the 9900 Transmitter to be mounted just about anywhere. The design features make it suitable for installations onto walls, pipes, struts or inside panels. There are two kits available, Rear Enclosure with Hinged Cover or with Flat Cover. Kits can be installed on any generation of the 3-9900-1P Panel Mount Transmitter. They can also be used with the 3-9900-1BC Batch Controller System.

The Hinged Cover version is suitable for wall or pipe mount installations. The kit is equipped with necessary wall mounting hardware. Plastic tie wraps or metal hose clamps (customer supplied) can be used for pipe mount installations. Two slots are available up to 12.7 mm (0.5 in.) wide. The Hinged Cover design allows for easy access to the back of the 9900 Transmitter for wiring and module installation. The user can install the hinged door to swing down, up or side-to-side.

The Flat Cover kit is designed to fit inside a panel for waterproof protection.

Both options have sufficient space for all 9900 Transmitter modules. Enclosures have hole markers on all sides, so users can drill holes and position the wires on the top, bottom or sides.

Features

- **Compatible with all existing 9900-1P Transmitters**
- **NEMA TYPE 4X/IP66 rated for indoor or outdoor installations**
- **Spacious for any 9900 Transmitter accessory module**
- **Hinged cover design for easy to access wiring**
- **Hinged cover suitable for wall mount or pipe mount installations**
- **Use inside a panel for waterproof protection**
- **Drill holes on any side for flexible wiring orientation**

Applications

- **Wastewater Treatment**
- **Reverse Osmosis**
- **Deionization**
  - **Ultra Pure Water**
  - **Two Bed System**
  - **Mixed Bed System**
- **Chemical Manufacturing/Addition**
- **Metal and Plastic Finishing**
- **Fume Scrubber**
- **Cooling Towers**
- **Media Filtration**
- **Aquatic**
- **Municipalities**

Specifications

General			
Case Material		PBT-PC alloy	
Rear Enclosure Gasket		Silicone molded gasket	
Front Gasket		Hinged Cover Kit - Silicone molded gasket	
		Flat Cover Kit - Polyurethane die-cut foam gasket	
Brass Inserts and Stainless Steel Screws			
Mounting	Panel	Rear Enclosure, Flat Cover	
	Wall	Rear Enclosure, Hinged Cover	
	Pipe	Rear Enclosure, Hinged Cover	
Environmental			
Ambient Operating Temperature		-10 °C to 70 °C	14 °F to 158 °F
Rating		NEMA TYPE 4X/IP66	
Shipping Weights			
Rear Enclosure, Hinged Cover		0.30 kg	0.65 lb
Rear Enclosure, Flat Cover		0.28 kg	0.60 lb
Standards and Approvals			
		RoHS compliant, China RoHS, Made in USA from US and Imported Parts	
		Manufactured under ISO 9001 for Quality and ISO 14001 for Environmental Management and OHSAS 18001 for Occupational Health and Safety	

Dimensions

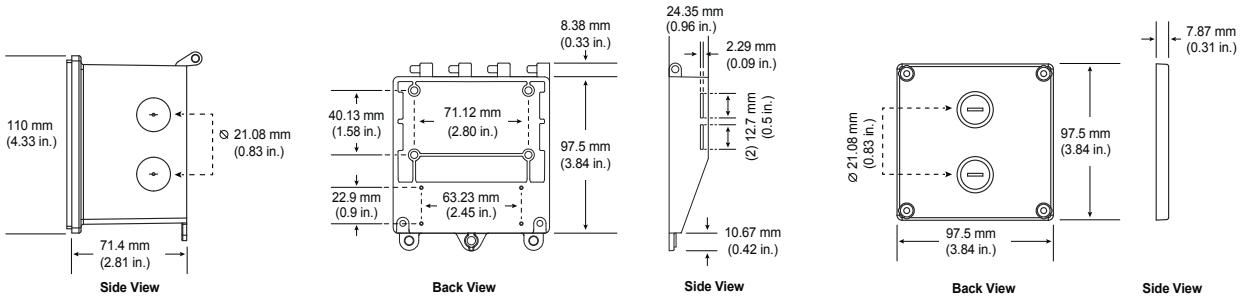

System Overview

Wall Mount Installation	Pipe, Post, Strut Installation	Panel Mount Installation
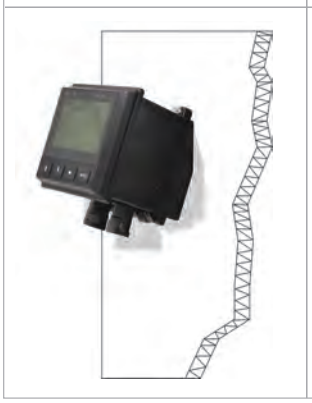		

Ordering Information

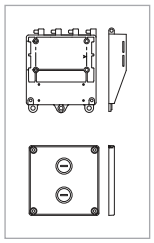

Mfr. Part No	Code	Description
3-9900.399-1	**159 001 834**	Rear Enclosure Hinged Cover
3-9900.399-2	**159 001 835**	Rear Enclosure Flat Cover

Standard 9900 and 9950 Instrument Enclosure Assemblies

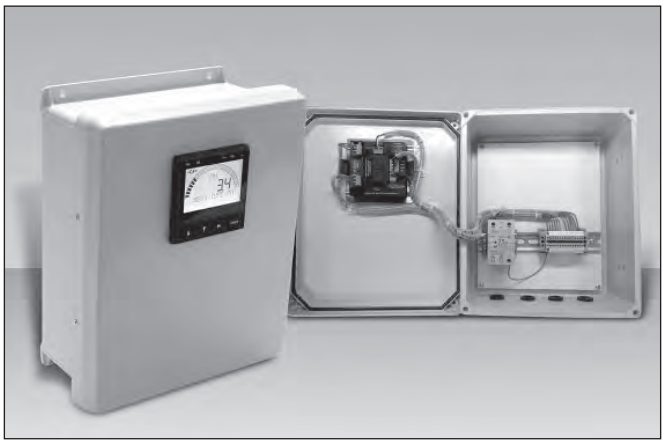

These enclosures offer a simple solution for the customer who doesn't have the time to install Signet meters into panels. Whether it's a display transmitter or monitor, these panels make installation easy. Just mount the Instrument Enclosure onto the wall using the integral mounting points, and wire the sensor inputs and outputs to the DIN rail terminal block. The enclosure is simply plug and play.

For any custom instrument enclosures, including 9950s, 9900s, 8900s, multiple displays, and 4630 Chlorine flow cell black enclosures, please contact your local GF Piping Systems sales office.

Each pre-wired Instrument Enclosure is factory tested before shipping. No other industrial piping systems manufacturer offers the product breadth, or combined quality and simplicity, as Georg Fischer.

Features

- **Convenience (mount the enclosure, then simply land the field wires)**
- **Hundreds of configuration possibilities (Flow, pH/ORP, Conductivity/Resistivity, Temperature, Pressure, Level, etc.)**
- **NEMA 4X**
- **Stainless hinges and latches**
- **Pad-lockable latch**
- **Simplified field wiring diagram**
- **Pre-wired between display and DIN rail terminals**
- **Universal input 100-240 VAC**
- **8 ft, 120 VAC power cord**
- **DIN rail terminal block for easy termination of field wires**
- **Pre-drilled conduit holes equipped with liquid-tight cord grips**

Specifications

General	
Materials of Construction	
Enclosure	Made of gray, hot molded fiberglass reinforced polyester UV stabilized
Hinges	304 SS
Lockable Latch	316 SS
Liquid Tight Cordgrips	All nylon construction with TPE and /or Buna N sealing gland
Electrical	
Terminal Block	DIN rail, AWG 26–16, Width: 0.17", Mounting type: NS 35/7,5, NS 35/15, NS 32
Power Supply	DIN rail 110/220 VAC, 50/60 Hz to 24 VDC 300 mA
For Signet components, see individual data sheets at www.gfpiping.com	
Standards and Approvals	
	NEMA 4X, UL (upon request)

Dimensions

Standard Enclosure

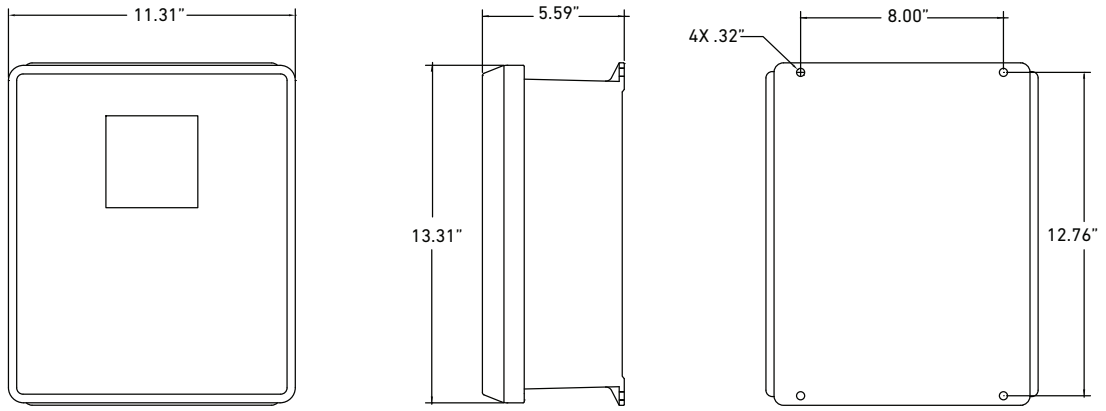

Dimensions (cont.)

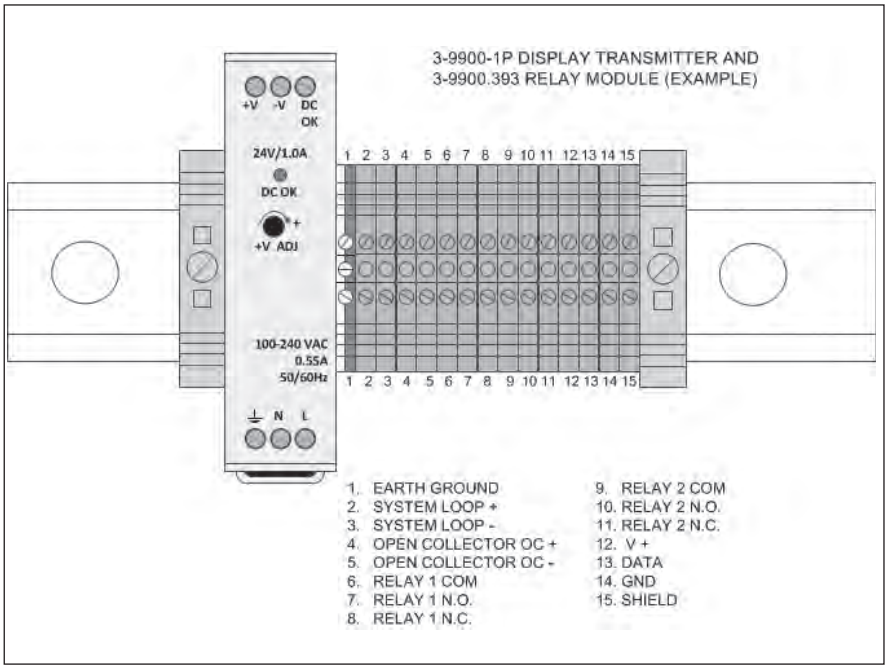

System Overview

Panel Mount Instrument Enclosure

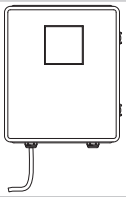

Sensors (sold separately)

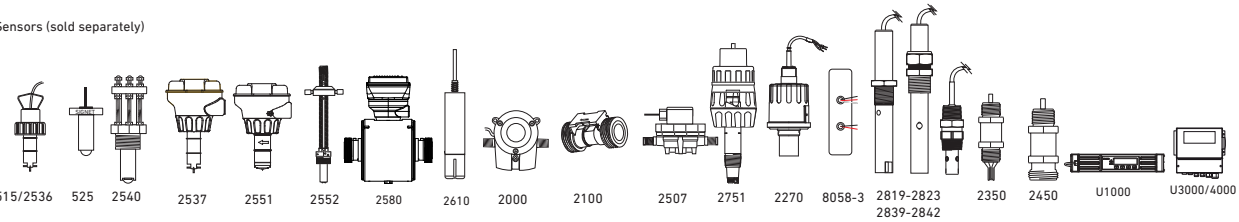

Signet Fittings - See individual sensor data sheets

All sold separately

Ordering Information

9900 Instrument Enclosures

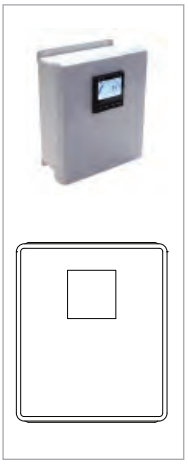

Mfr. Part No	Code	Description
3-9900-1P-S-1-1-4	**150 399 001**	Panel Mount Transmitter, (1) input, (1) 4-20 mA and (1) OC outputs, DC power
3-9900-1P-393-S-1-1-4	**150 399 002**	Panel Mount Transmitter, (1) input, (1) 4-20 mA and (1) OC outputs, DC power, (2) Dry Contact Relays
3-9900-1P-393-394-S-1-1-4	**150 399 003**	Panel Mount Transmitter, (1) input, (1) 4-20 mA and (1) OC outputs, DC power, (2) Dry Contact Relays, Cond/Resist Module
3-9900-1P-394-S-1-1-4	**150 399 004**	Panel Mount Transmitter, (1) input, (1) 4-20 mA and (1) OC outputs, DC power, Cond/Resist Module
3-9900-1P-398-S-1-1-4	**150 399 005**	(1) Input, (2) 4-20 mA and (1) OC outputs, DC power
3-9900-1P-393-398-S-1-1-4	**150 399 006**	(1) Input, (2) 4-20 mA and (1) OC outputs, DC power, (2) Dry Contact Relays

Notes:
- Instrument mounted through solid, hinged, door
- With 24 VDC Power Supply Input 84-264 VAC 50/60 Hz, mounted to DIN Rail
- With terminal blocks, pre-wired wiring harness
- 4 conduit holes with cable connectors

9950 Instrument Enclosures

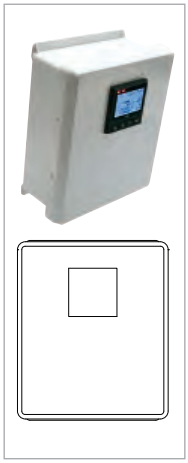

Mfr. Part No	Code	Description
3-9950-2-S-2-1-1-4	**150 399 010**	9950 Transmitter, (2) Input, (2) 4-20mA, AC/DC Power
3-9950-393-1-2-S-2-2-1-4	**150 399 011**	9950 Transmitter, (2) Input, (2) 4-20mA, AC/DC power, (4) Mechanical Dry Contact Relays
3-9950-393-2-2-S-2-3-1-4	**150 399 012**	9950 Transmitter, (2) Input, (2) 4-20mA, AC/DC power, (2) Mechanical, (2) Solid State Dry Contact Relays
3-9950-393-3-2-S-2-4-1-4	**150 399 013**	9950 Transmitter, (2) Input, (2) 4-20mA, AC/DC power, (2) Mechanical, (4) Binary Input

Notes:
- Instrument mounted through solid, hinged, door
- Input 84-264 VAC 50/60 Hz (optional 24VDC)
- With terminal blocks, pre-wired wiring harness
- 4 conduit holes with cable connectors

Signet 0252 Configuration Tool

The new 0252 Configuration Tool interfaces with Signet SmartPro® Transmitters and blind sensors, allowing fast and easy configuration using a PC. The configuration information can be saved to a file and stored on a PC to be used later on a replacement sensor or for another sensor in a similar application.

The saved configuration file can be downloaded to the sensor or the SmartPro Transmitters in mere seconds.

The save and load features allow you to back up all of your settings and transfer them to future devices. You can also e-mail the files to share with other users of the 0252 software.

The 0252 will graph and data log sensors in real time for trend and troubleshooting analysis. Export data logs in coma-separated value (CSV) format for review and reporting in many popular spreadsheet and database applications.

Support for new sensors and products is as simple as connecting to the Internet. The software will automatically download updates from the internet to ensure you have the latest version of the application.

The software is supported in the following languages: Simplified Chinese, English, French, German, Italian, Portuguese and Spanish.

Features

- **Back up and restore SmartPro® Transmitters and blind sensors configurations to a computer file**
- **User-friendly interface**
- **Configure settings such as instrument type, units, scale 4 to 20 current loops and modify labels from the computer**
- **Use a single file to clone multiple SmartPro® Transmitters and blind sensors**
- **Red and blue LED indicators for power and data**

Compatibility

- **9900 Transmitter**
- **2250 Level Sensor**
- **2350 Temperature Sensor**
- **2450 Pressure Sensor**
- **2551 Magmeter Flow Sensor**
- **2552 Metal Magmeter Flow Sensor**
- **2580 FlowtraMag Meter**
- **2610-51 Dissolved Oxygen**
- **2751 pH/ORP Smart Sensor Electronics**
- **Windows XP, 32-bit**
- **Windows Vista®**
- **Windows 7 (32 and 64-bit versions)**
- **Windows 8 and Windows 8.1 (32 and 64-bit versions)**
- **Windows 10 (32 and 64-bit versions)**

Specifications

General		
Materials	ABS body	
Power Requirements	Supplied by USB Interface	
System Requirements	Windows XP, Windows Vista, Windows 7 (32 and 64 bit), Windows 8, 8.1, and Windows 10 (32 and 64 bit), free USB port, administrator account for installation, Internet access required for automatic updates.	
Inputs	3-wire (S^3L) input	
Output Specifications	USB 1.0 or greater	
Shipping Weight		
	0.220 kg	0.48 lb
Standards and Approvals		
	CE, FCC	
	RoHS compliant, China RoHS	

Dimensions

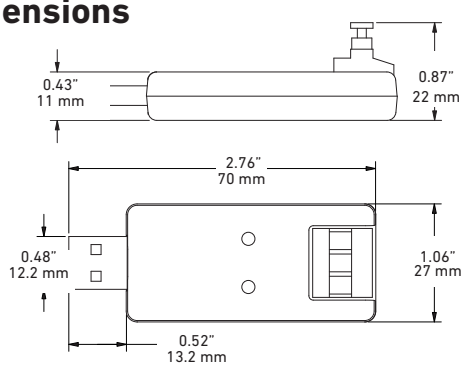

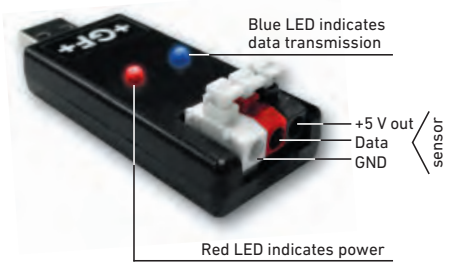

For wiring reference please see manual

System Overview

Modifiable Parameters (dependent on SmartPro Instrument type or sensor to be configured)

- Instrument type
- Units of measure
- Customer configurable tag (label)
- 4 to 20 mA span
- 4 to 20 mA error value
- Relay and open collector modes
- Bar graph span
- Back light control
- LCD contrast
- Password
- and other instrument and sensor specific settings

- Relay Modes (dependent on Instrument type)
  - Low set point
  - High set point
  - Window In
  - Window Out
  - PWM
  - Proportional Pulse
  - Cycle Low
  - Cycle High
  - Volumetric Pulse
  - Totalizer
  - Error

- Includes 2 m (6 ft) USB extension cable and 1 m (3 ft) SmartPro (9900) interface cable

Ordering Information

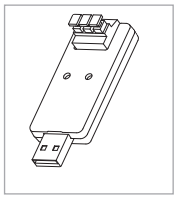

Mfr. Part No.	Code	Description
3-0252	**159 001 808**	Configuration tool

Accessories and Replacement Parts

Mfr. Part No	Code	Description
6682-3004	**159 001 725**	Terminal block plug

Signet 7310 Switching Power Supplies

Signet 7310 Switching Power Supplies provide regulated output voltage in compact and lightweight plastic housings for DIN Rail mounting. The series includes five different output capacities from 0.42A to 4A (10W to 96W), all of which accept universal AC line voltage input and meet worldwide standards for performance and safety. These units meet the power requirements for a single system, multiple Signet instruments or other devices requiring 24 VDC operation.

Features

- **Universal AC input/full range**
- **Protections: Short circuit/overload/ over voltage**
- **Cooling by free air convection**
- **Install on DIN rail TS-35/7.5 or 15**
- **NEC class 2 / LPS compliant**
- **Built in DC OK active signal**
- **LED indicator for power on**
- **No load power consumption < 1W for 7310-7024 and < 0.75W for others**
- **100% full load burn-in test**

Compatibility

- **Signet Instruments**
- **Electromagnetic Flow Sensors**
- **Suitable for Electric Actuated Valves, including Solenoid**
- **Suitable for powering passive outputs and relays**

Specifications

	7310-1024	7310-2024	7310-4024	7310-6024	7310-7024
Output					
DC Voltage	24V				
Rated Current	0.42A	1.0A	1.7A	2.5A	4.0A
Current Range	0 ~ 0.42A	0 ~ 1A	0 ~ 1.7A	0 ~ 2.5A	0 ~ 4A
Rated Power	10W	24W	40.8W	60W	96W
Ripple & Noise (max.) Note.2	150mVp-p				
Voltage Adj. Range	N/A	21.6 ~ 26.4V	24 ~ 30V		
Voltage Tolerance Note.3	±2.0%	±1.0%			
Line Regulation	±1.0%				
Load Regulation	±2.0%	±1.0%			
Setup, Rise Time Note.5	500 ms, 30 ms/230 VAC, 1000 ms, 30 ms/115 VAC at full load		500 ms, 30 ms/230 VAC 500 ms, 30 ms/115VAC at full load		3000 ms, 50 ms/ 230 VAC 3000 ms, 50 ms/115 VAC at full load
Hold Up Time (Typ.)	120 ms/230 VAC, 25 ms/115 VAC at full load	50 ms/230 VAC 20 ms/115 VAC at full load			
Input					
Voltage Range	85 ~ 264 VAC, 120 ~ 370 VDC				
Frequency Range	47 ~ 63Hz				
Efficiency (Typ.)	84%		88%	88%	86%
AC Current (Typ.)	0.33A/115 VAC 0.21A/230 VAC	0.55A/115 VAC 0.35A/230 VAC	1.1A/115 VAC 0.7A/230 VAC	1.8A/115 VAC 1A/230 VAC	1.3A/115 VAC 0.8A/230 VAC
Inrush Current (Typ.)	Cold Start 35A/ 115 VAC 70A/230 VAC	Cold Start 20A/ 115 VAC 40A/230 VAC	Cold Start 30A/115 VAC 60 A/230 VAC		
Leakage Current	<1 mA / 240 VAC				
Protection					
Overload	Above 105% rated output power	105 ~ 160% rated output power	105 ~ 150% rated output power		
Protection Type	Hiccup mode, recovers automatically after fault condition is removed	Constant current limiting, recovers automatically after fault condition is removed			
Over Voltage	27.6 ~ 32.4V	27.6 ~ 32.4V	31.2 ~ 36V		
Protection Type	Shut down o/p voltage, repower on to recover				
Function					
DC OK Active Signal (max.)	18 ~ 27V / 20 mA	18 ~ 27V / 20 mA	Relay contact rating(max.): 30V/1A resistive		

Dimensions

7310-1024
7310-2024

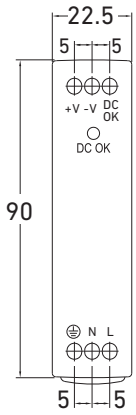

Front View

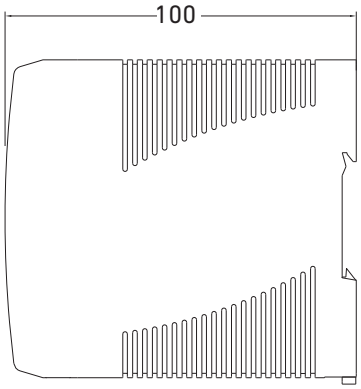

Side View

7310-4024
7310-6024

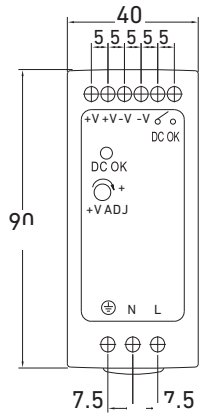

Front View

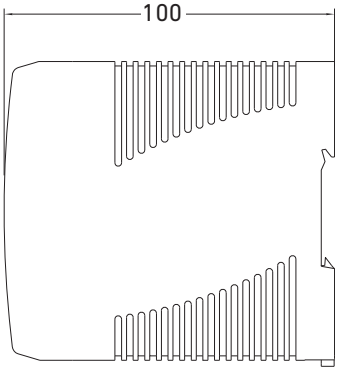

Side View

Specifications (continued)

	7310-1024	7310-2024	7310-4024	7310-6024	7310-7024
Environment					
Working Temperature	-20 ~ +70 °C (Refer to output load Derating Curve)				10 ~ 60 °C (Refer to output load Derating Curve)
Working Humidity	20 ~ 90% RH non-condensing				
Storage Temp., Humidity	-40 ~ +85 °C, 10 ~ 95% RH				
Temp. Coefficient	±0.03%/ °C (0~50 °C)				
Vibration	Component:10 ~ 500Hz, 2G 10min./1cycle, 60min. each along X, Y, Z axes; Mounting: Compliance to IEC60068-2-6				
Safety and EMC (Note 4)					
Safety Standards	UL508, TUV EN60950-1 approved, NEC class 2 / LPS compliant	UL508, UL60950-1, TUV EN60950-1 approved			UL508, TUV EN60950-1 approved
Withstand Voltage	I/P-O/P:3KVAC I/P-FG:1.5KVAC O/P-FG:0.5KVAC		I/P-O/P:3KVAC I/P-FG:2KVAC O/P-FG:0.5KVAC		I/P-O/P:3KVAC I/P-FG:1.5KVAC O/P-FG:0.5KVAC
Isolation Resistance	I/P-O/P, I/P-FG, O/P-FG:100M Ω 500VDC / 25 °C / 70% RH	I/P-O/P, I/P-FG, O/P-FG:100MΩ /500VDC	I/P-O/P, I/P-FG, O/P-FG:>100MΩ / 500VDC / 25 °C / 70% RH	I/P-O/P, I/P-FG, O/P-FG:>100MΩ / 500VDC / 25 °C / 70% RH	I/P-O/P, I/P-FG, O/P-FG:>100Ω / 500VDC / 25 °C / 70% RH
EMC Emission	Compliance to EN55011, EN55022 (CISPR22), EN61204-3 Class B, EN61000-3-2,-3				
EMC Immunity	Compliance to EN61000-4-2, 3, 4, 5, 6, 8, 11, EN55024,EN61000-6-1,EN61204-3, light industry level, criteria A				
Others					
MTBF	584K hrs min MIL-HDBK-217F (25 °C)	236.9K hrs min MIL-HDBK-217F (25 °C)	301.7K hrs min MIL-HDBK-217F (25 °C)	299.2K hrs min MIL-HDBK-217F (25 °C)	346K hrs min MIL-HDBK-217F (25 °C)
Dimension	22.5*90*100mm (W*H*D)	22.5*90*100mm (W*H*D)	40*90*100mm (W*H*D)		55*90*100mm (W*H*D)
Packing	0.17Kg; 72pcs/ 13.2Kg/.0.91CUFT	0.19Kg; 72pcs/ 14.7Kg /0.91CUFT	0.3Kg; 42pcs/ 13.6Kg/0.82CUFT	0.33Kg; 42pcs/ 14.8Kg/0.82CUFT	0.42Kg; 30pcs /13.6Kg/0.82CUFT

Note
1. All parameters NOT specially mentioned are measured at 230VAC input, rated load and 25 °C of ambient temperature.
2. Ripple & noise are measured at 20MHz of bandwidth by using a 12" twisted pair-wire terminated with a 0.1uf & 47uf parallel capacitor.
3. Tolerance : includes set up tolerance, line regulation and load regulation.
4. The power supply is considered a component which will be installed into a final equipment. The final equipment must be re-confirmed that it still meets EMC directives.
5. Length of set up time is measured at cold first start. Turning ON/OFF the power supply may lead to increase of the set up time.

Derating Curve

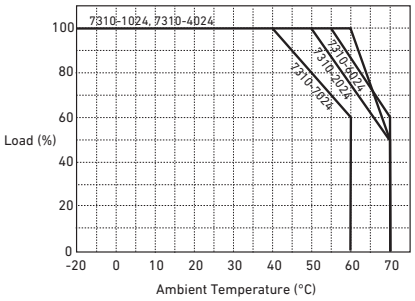

Output Derating Vs. Input Voltage

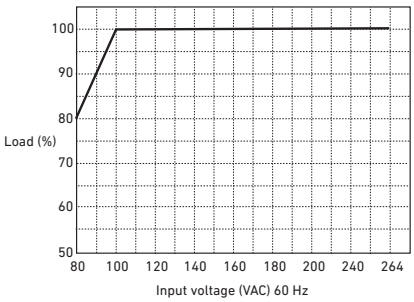

7310-7024

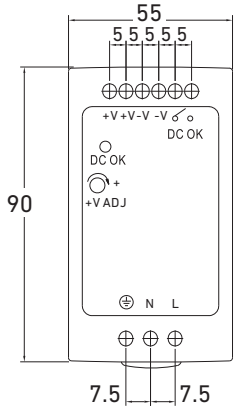

Front View

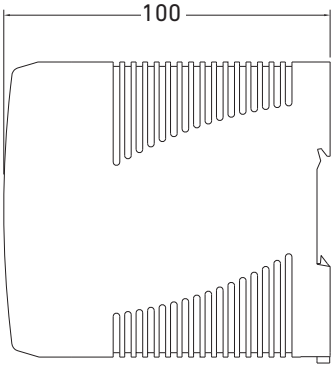

Side View

Application of DC OK Active Signal

7310-1024, 7310-2024

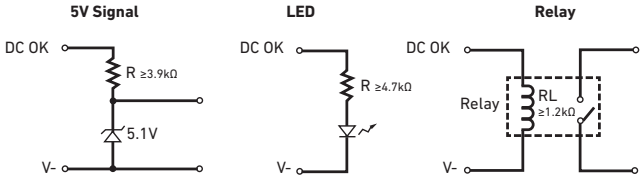

DC OK Relay Contact

7310-4024, 7310-6024, 7310-7024

Contact close	PSU turns on/DC okay
Contact open	PSU turns off/DC fail
Contact ratings (max.)	30V/1A resistive load

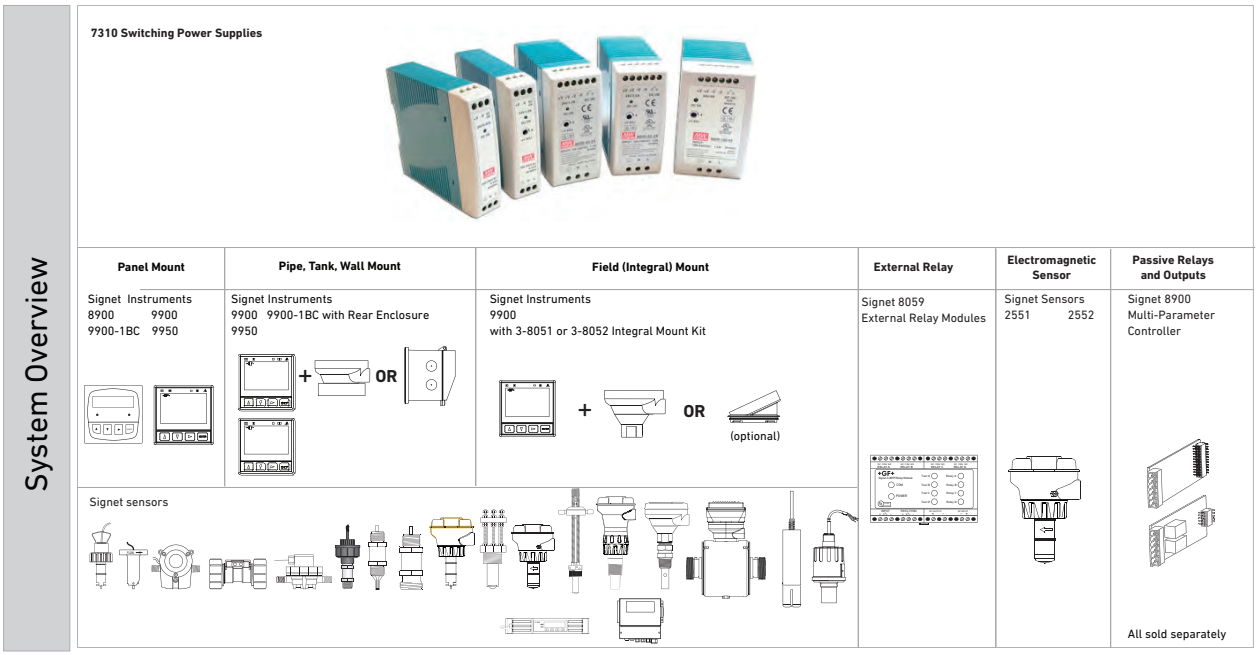

Ordering Information

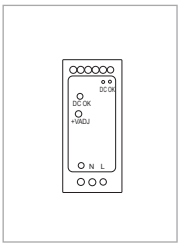

Mfr. Part No.	Code	Voltage and Current Output Options
7310-1024	**159 873 004**	24 VDC Power Supply, 10W, 0.42 A
7310-2024	**159 873 005**	24 VDC Power Supply, 24W, 1.0 A
7310-4024	**159 873 006**	24 VDC Power Supply, 40W, 1.7 A
7310-6024	**159 873 007**	24 VDC Power Supply, 60W, 2.5 A
7310-7024	**159 873 008**	24 VDC Power Supply, 96W, 4.0 A

Accessories and Replacement Parts

DIN rail in one meter (1000 mm) lengths, and DIN rail clips are available. The standard packaging of these power supplies are to be fastened to DIN rails, and accessory clips will keep the supplies from sliding if the rail itself is mounted vertically, for example. Contact the factory for more details.

Mfr. Part No.	Code	Description
6205-0002	**159 000 858**	1-meter length DIN Rail
6205-0003	**159 000 859**	End clip for DIN Rail

Signet 8900 Multi-Parameter Controller

Member of the ProcessPro® Family of Instruments

The Signet 8900 Multi-Parameter Controller takes the concept of modularity to the extreme. Each 8900 is field commissioned with the users specified combination of inputs, outputs, and relays using simple-to-install modular boards into the base unit. Configure the system by selecting either four or six input channels which accepts any of the Signet sensors listed below, and/or other manufacturer's sensors via a 4 to 20 mA signal converter (Signet Model 8058). To complete your unit, choose a power module with universal AC line voltage or 12 to 24 VDC ±10%, regulated.

If more features are needed, analog output and relay modules are available and easily installed. Plus, the 8900 will support four additional relays via an external relay module. There are other notable features that the 8900 offers. For instance, digital input to the 8900 enables longer cable runs and simplified wiring with minimal noise interference. Advanced relay logic allows users to select up to 3 measurement sources to trigger 1 relay. Derived measurements include difference, sum, ratio, percent recovery, percent rejection, percent passage and BTU. The menu system can be programmed to display in multi-languages including English, German, French, Spanish, Italian, and Portuguese.

Features

- **Measures Flow, pH, ORP, Conductivity, Pressure, Level and Temperature**
- **Multi-language display**
- **¼ DIN enclosure**
- **Up to 4 analog outputs**
- **Up to 8 relays**
- **12 to 24 VDC or 100 to 240 VAC ±10%, regulated power**
- **Digital communication allows for extended cable lengths and easy wiring**
- **Accepts 3rd party 4 to 20 mA output devices when used with 8058 signal converter**
- **Available with 4 or 6 channels**
- **Simultaneous BTU Calculations with Heating & Cooling Totalizers per calculation**

LISTED
MEASURING EQUIPMENT
77CJ

Applications

- **RO/DI System Control**
- **Media Filtration**
- **Pure Water Production**
- **Demineralizers**
- **Chemical Processing**
- **Metal & Plastics Finishing**
- **Fume Scrubbers**
- **Proportional Chemical Addition**
- **Cooling Tower & Boiler Protection**
- **Wastewater Treatment**
- **Aquatic Animal Life Support Systems**
- **Rinse Tank**

Specifications

General			
Compatibility		Modular (completely field-commissionable)	
No. of Input Channels		4 or 6	
Compatible Sensors		See System Overview	
Input Signal Types	Digital (S^3L)	Serial ASCII, TTL level 9600 bps	
	Frequency	0.5% of reading	
Measurement Types		Flow, pH, ORP, Conductivity/Resistivity, Pressure, Temperature, Level, or 3rd party devices with a 4 to 20 mA output	
Derived Measurements		Sum, difference, ratio, % recovery, % reject, % passage, power (BTU)	
No. of Relays Supported		Available: 2, 4, 6 or 8 (8 dry-contact or 4 solid state and 4 dry- contact)	
No. of Analog Outputs		Available in pairs: 2 or 4 (active and/or passive 4 to 20 mA); and/or 2 (0 to 5/10 VDC)	
Enclosure and Display			
Enclosure Rating		NEMA 4X/IP65 (front face only)	
Case Material		PBT	
Panel Gasket		Silicone Sponge	
Window		Self-healing polyurethane-coated polycarbonate	
Keypad		4-buttons, highly tactile and audible injection-molded silicone rubber seal	
Display		Alphanumeric 2 x 16 back-lit LCD	
Update Rate		1 second	
Accuracy		Sensor dependent	
LCD Contrast		4 settings	
Languages Available		English, French, Spanish, German, Italian and Portuguese	
Display Ranges (see sensor specifications for actual measurement limits)			
pH		-2.00 to 15.00 pH	
pH Temperature		-40 °C to 150 °C	-40 °F to 302 °F
ORP		-9999 to +9999 mV	
Flow Rate		0.0000 to 999999 units per second, minute, hour or day	
Totalizer		0.00 to 99999999 units	
Conductivity		0.0000 to 999999 µS, mS, PPM & PPB (TDS), kΩ, MΩ	
Conductivity Temperature		-99.9 °C to 250 °C	-148 °F to 482 °F
Temperature		-99.9 °C to 999.9 °C	-148 °F to 999.9 °F
Pressure		-99.99 to 9999 psi, kPa, bar	
Level		-99999 to 99999 m, cm, ft, in., %	
Volume		-99999 to 999999 m^3, ft^3, in^3, cm^3, gal, L, kg, lb, %	
Other (4 to 20 mA)		-99999 to 999999 user selectable units	
Environmental			
Ambient Operating Temperature			
Backlit LCD		-10 °C to 55 °C	14 °F to 131 °F
Storage Temperature		-15 °C to 80 °C	5 °F to 176 °F
Relative Humidity		0 to 95%, non-condensing	
Maximum Altitude		2,000 m (6,560 ft)	
		4,000 m (13,123 ft); use only DC power supply and, if applicable, solid state relays to maintain UL safety standard up to this altitude	

Specifications (continued)

Electrical			
Power Requirements (AC or DC via Power Modules)			
Universal AC	100 to 240 VAC ±10%, regulated 50-60 Hz, 24 VA max.		
DC	12 to 24 VDC, ±10%, regulated recommended, 7 Watts max.		
Output Power to Sensors	5 VDC up to 40 mA total		
Terminal Type	Screw-clamp, removable via plug-in modules		
Analog Outputs (via I/O Modules and Output Modules) All analog outputs are freely assignable to any channel.			
4 to 20 mA Output	Endpoints are adjustable and reversible		
Minimum Default	4.0 mA; user adjustable from 3.8 to 5.0 mA		
Maximum Default	20.00 mA; user adjustable from 19.0 to 21.0 mA		
Test Mode	Produces an adjustable 4 to 20 mA signal for functional verification of each output circuit		
Isolation	Up to 48 VAC/DC		
Error Condition	22.1 mA (default state when output source not configured)		
Update Rate	100 ms		
Accuracy	±32 µA over entire operating temperature range		
Passive 4 to 20 mA (External Power required)			
Voltage	12 to 24 VDC, ±10%, regulated		
Max. Impedance	250 Ω @ 12 VDC	500 Ω @ 18 VDC	750 Ω @ 24 VDC
Active 4 to 20 mA (Internally Loop Powered)			
Max. Impedance	750 Ω		
0 to 5/10 VDC Output	Endpoints are adjustable and reversible		
Output Range	0 to 5 VDC or 0 to 10 VDC, software selectable		
Minimum Default	0 VDC; user programmable from 0 to 0.5 VDC		
Maximum Default	5 VDC; user programmable from 4.5 to 5.5 VDC, or 9.5 to 10.5 VDC		
Output Load	10 kΩ minimum		
Test Mode	Produces an adjustable signal for functional verification of each output circuit		
Isolation	Up to 48 VAC/DC		
Error Condition	0 VDC (default state when output source not configured)		
Update Rate	100 mS		
Accuracy	±20 mV over entire operating temperature range		
Resolution	5 mV		
Power Supply Rejection	0.5 mV/V		
Relay Modules All relays are freely assignable to any channel			
Internal Relay Modes of Operation	Off, Low, High, Window, Proportional Pulse, Pulse Width Modulation, USP, Volumetric, Pulse, Totalizer Volume, Advanced, % Rejection, % Recovery, % Passage		
External relay modes of operation	Off, Low, High, Window, USP, Totalizer Volume, Advanced, % Rejection, % Recovery, % Passage		
Hysteresis	User adjustable		
Time Delay	0 to 6400 seconds		
Advanced Relay	Use “AND/OR” logic along with relay sources to trigger a relay. High/Low modes available for each of the 3 sources		
Solid State Relays	Non-mechanical switches		
Normally Open/Closed Operation	Software selectable		

Specifications (continued)

Relay Modules continued		
Maximum Voltage Rating	30 VDC or 42 VAC p-p	
Current Rating	50 mA DC or 50 mA AC RMS	
On-state Impedance	30 Ω or less	
Off-state Leakage	400 nA or less, AC or DC	
Isolation	Up to 48 VAC/DC	
Transient Protection	Embedded, up to 48 V over-voltage	
Dry-contact Relays	Mechanical contacts	
Type	SPDT	
Form	C	
Maximum Pulse Rate	600 pulses/min. (volumetric pulse & PWM modes)	
	400 pulses/min. (prop. pulse mode)	
Maximum Voltage Rating	30 VDC or 250 VAC	
Current Rating	5 A	
Shipping Weight		
Base Unit	1.00 kg	2.25 lb
Power Module	0.12 kg	0.25 lb
I/O Module	0.12 kg	0.25 lb
Output Module	0.12 kg	0.25 lb
Relay Module	0.12 kg	0.25 lb
Standards and Approvals		
	CE, UL, FCC	
	RoHS compliant, China RoHS, Made in USA from US and Imported Parts	
	Manufactured under ISO 9001 for Quality and ISO 14001 for Environmental Management and OHSAS 18001 for Occupational Health and Safety	

Dimensions

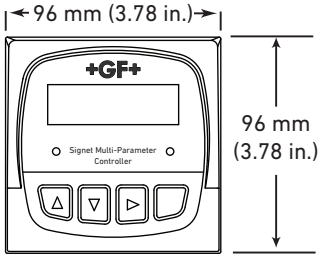

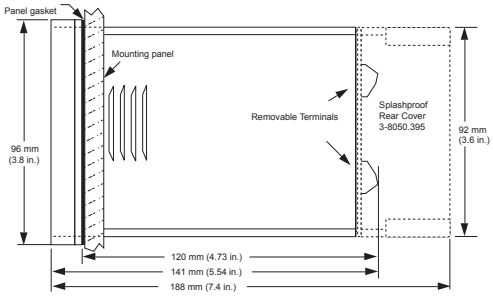

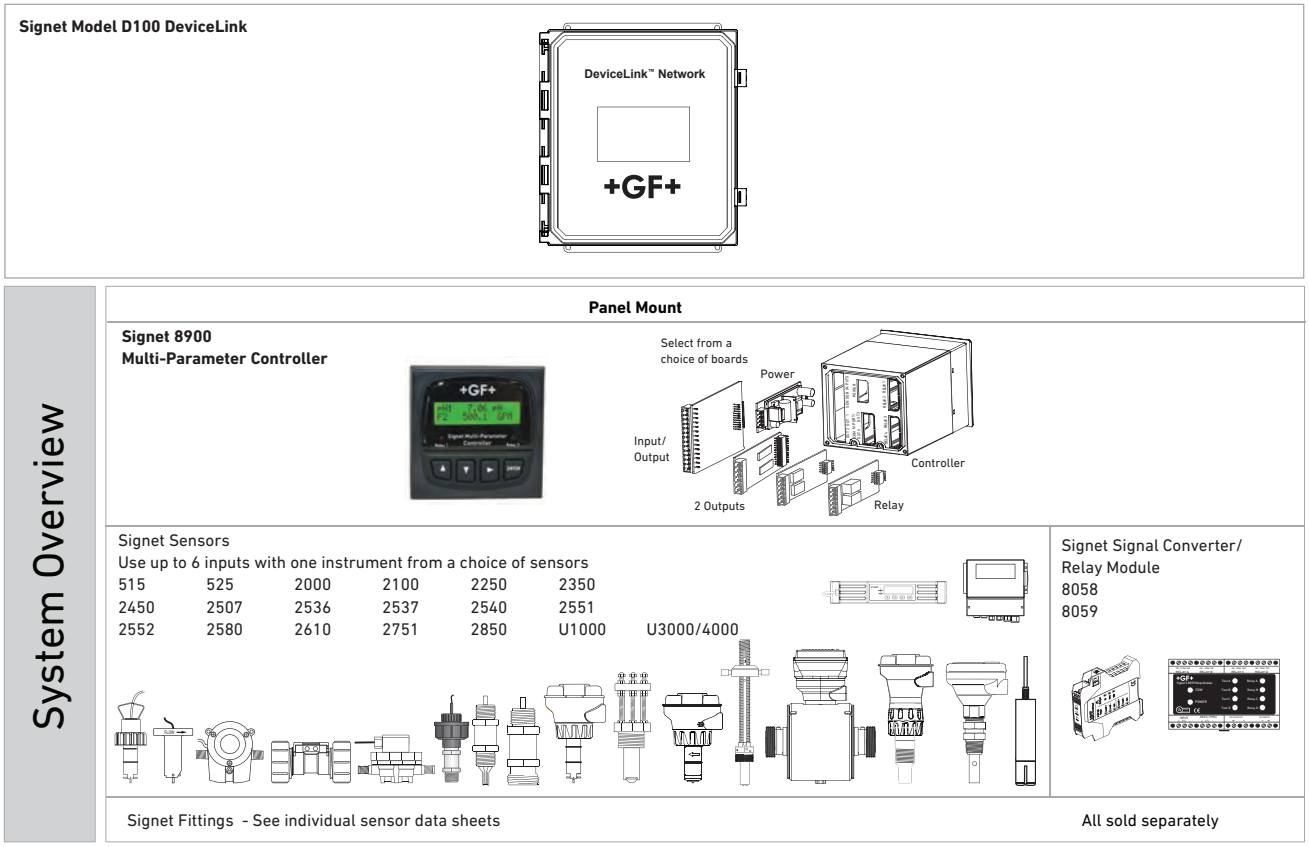

There are hundreds of system types that can be set up with the 8900. The examples below illustrate various sensors in different installation schemes. Wiring topology for point-to-point, daisy-chain, multi-drop, or a combination of these are listed in each example. Digital sensor outputs allow for long cable runs with high noise immunity. See Wiring section for allowable cable lengths.

Example 1

Notes

1. External relays can be used with any input module and does not consume a sensor input channel (Model 8059)
2. Model 8058 Signal Converter can be used with any input module

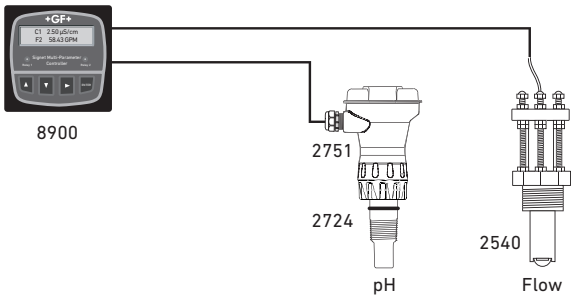

Example 2

- 8900 input module: Four inputs
- Sensors connected: Signet 2350 temperature sensor, 2850 with 2841 conductivity, and two 2450 pressure sensors
- Wiring configuration: Daisy-chain

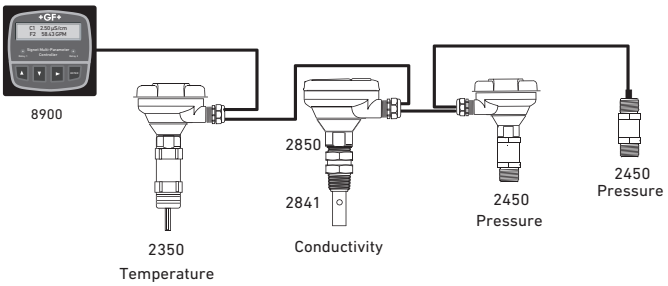

Example 3

- 8900 input module: Four inputs
- Sensors connected: Signet 2507 flow (frequency) and 2751 with 2724 pH sensors; Other manufacturers' dissolved oxygen and level sensors with 4 to 20 mA output
- External Devices: Signet 8058 signal converter - 4 to 20 mA to digital (S^3L)
- Wiring configuration: Combination of point-to-point and daisy-chain

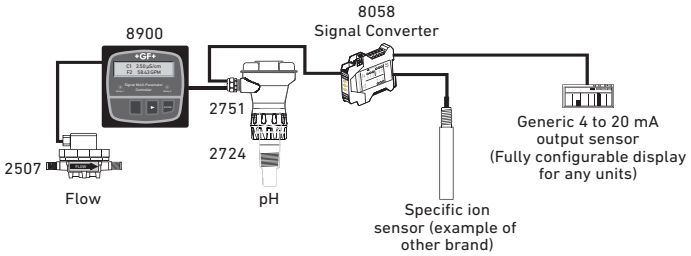

Example 4

- 8900 input module: Six inputs
- Sensors connected: Signet 2350 temperature sensor, 2850 with 2840 conductivity, 2450 pressure, 2751 with 2724 pH, and 515 and 2536 flow (frequency) sensors
- External Devices: Signet 8059 external relay module
- Wiring configuration: Combination of point-to-point and Multi-drop

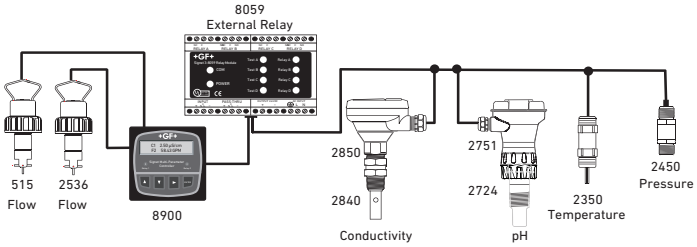

Wiring Options

- **Point-to-point** wiring is direct wiring of individual devices into the controller. This wiring topology is applicable for all inputs.
- **Daisy-chain** wiring allows sequential connection from one device to the next by using junction boxes. This wiring topology is applicable for digital (S^3L) inputs only.
- **Multi-drop** wiring allows drops from a single bus cable. Junction boxes can be used for the 3-way junctions that are formed with this wiring scheme. This wiring topology is applicable for digital (S^3L) inputs only.

Please refer to Wiring, Installation, and Accessories sections for more information.

Installation of Modules with the Base Unit

3-8900

One base unit is required to build a functional 8900. It is offered with a backlit LCD display. Programming the unit is done simply via the push-button keypad.

The unit can be tailored to display in English, German, French, Spanish, Italian, and Portuguese. The two line display allows for easy programming, navigation, and viewing of each channel.

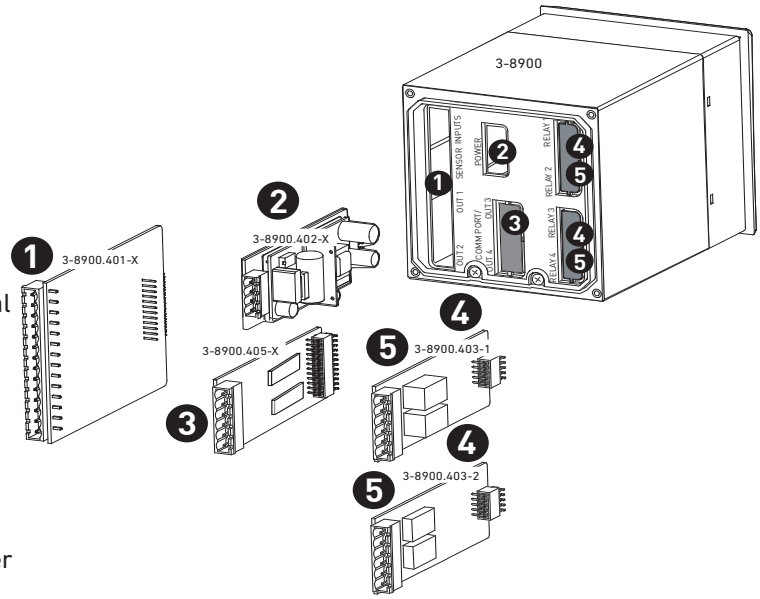

1. I/O Module

One I/O module is required to build a functional 8900. I/O modules are offered for 4 or 6 sensor inputs with or without two mA or voltage outputs. Users can select two additional outputs via the output module.

2. Power Module

One power module is required to build a functional 8900. The power module is offered for universal 100/240 VAC or 12 to 24 VDC (This module can be powered by optional external relays (see ordering information for more details).

3. Output Module

Output modules are optional when building an 8900. This module can be used in addition to other outputs that are available in the I/O modules. Active current is powered by the 8900. Passive outputs require an external 12 to 24 VDC power supply. All outputs are assignable to any input channel.

4 & 5 Relay Modules

Relay modules are optional when building an 8900. Relay modes of operation include off, low, high, window, USP, totalizer volume, advanced, proportional pulse, pulse width modulation, volumetric pulse, % reject, % recovery and % passage. The advanced relay option for "AND/OR" logic is used for up to 3 conditions. For instance, a relay will go to high/low if "a" is true and "b" or "c" is false. One or two relay modules can be installed into the 8900. One additional external relay module can also be used at the same time (See optional external relay ordering information.) All relays are assignable to any input channel.

Installation of Modules:

Modules simply plug in by sliding into the base unit on rails. They are held securely in place by the rear cover. Changes and upgrades can be made in the field at any time.

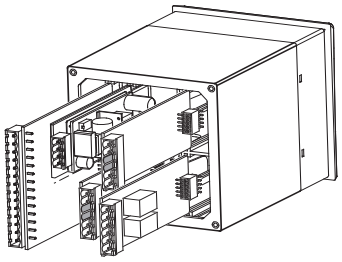

Ordering Notes

1) Building a functional unit requires a base unit, I/O module, and power module.
2) Output options are available on I/O modules and additional output modules can be used. The 8900 can support up to four outputs.
3) The 8900 can support up to eight relays. Up to two internal relay modules can be used simultaneously; additional external relays can also be used.
4) A maximum total of two frequency sensors can be used with any input card.
5) A total of six digit inputs or four digital inputs with two frequency inputs can be used.
6) The 8900 boards are field replaceable.
7) The 8900 can be reconfigured with new sensor types by simple reprogramming.

Ordering Information

To build a functional 8900 controller, choose the base unit, power module, and input/output (I/O) module. Additional outputs and relays are available, if needed.

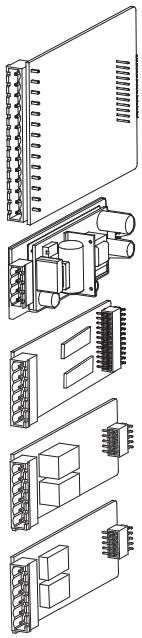

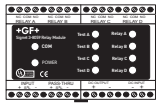

Base Units, Required		
3-8900	**159 000 868**	Base unit with back-lit LCD
I/O (input/output) Modules, Required; Choose One		
3-8900.401-5	**159 000 874**	Quad (4) Input (no outputs)
3-8900.401-6	**159 000 875**	Quad (4) Input with Two Passive* Loop Outputs
3-8900.401-7	**159 000 876**	Quad (4) Input with Two Active Loop Outputs
3-8900.401-8	**159 000 877**	Quad (4) Input with Two Voltage Outputs
3-8900.401-9	**159 000 968**	(6) Inputs (no outputs)
3-8900.401-11	**159 000 970**	(6) Inputs with Two Active Loop Outputs
Power Modules, Required; Choose One		
3-8900.402-1	**159 000 878**	110/220 VAC Power Module, ±10%, regulated
3-8900.402-2	**159 000 879**	12 to 24 VDC Power Module, ±10%, regulated
Optional Output Modules - Choose One		
3-8900.405-1	**159 000 883**	(2) Passive* Current Loop Outputs
3-8900.405-2	**159 000 884**	(2) Active Current Loop Outputs
Optional Relay Modules - Choose One or Two		
3-8900.403-1	**159 000 880**	Two Dry Contact Relays
3-8900.403-2	**159 000 881**	Two Solid State Relays
Optional External Relays - Choose One**		
3-8059-4	**159 000 772**	(4) dry-contact relays; requires 12 to 24 VDC ±10%, regulated
3-8059-4AC	**159 000 773**	(4) dry-contact relays; requires 100 to 240 VAC ±10%, regulated; supplies power to the 12 to 24 VDC ±10%, regulated power host device

* Passive outputs require an external power source
** See individual product page for the 8059 External Relay Modules.

Accessories and Replacement Parts

Mfr. Part No.	Code	Description
Mounting		
3-8050.392	**159 000 640**	¼ DIN retrofit adapter
3-8050.395	**159 000 186**	Splashproof rear cover
3-0000.596-1	**159 000 892**	¼ DIN wall mount bracket, 6½ in. (use if no rear cover is installed)
3-0000.596-2	**159 000 893**	¼ DIN wall mount bracket, 9 in. (use if rear cover is installed)
3-5000.399	**198 840 224**	Panel adapter, 5 x 5 in. to ¼ DIN
3-5000.598	**198 840 225**	Surface mount bracket
3-9900.396	**159 001 701**	Angle adjustment adapter kit
Power Supplies		
7310-1024	**159 873 004**	24 VDC Power Supply, 10W, 0.42 A
7310-2024	**159 873 005**	24 VDC Power Supply, 24W, 1.0 A
7310-4024	**159 873 006**	24 VDC Power Supply, 40W, 1.7 A
7310-6024	**159 873 007**	24 VDC Power Supply, 60W, 2.5 A
7310-7024	**159 873 008**	24 VDC Power Supply, 96W, 4.0 A
Miscellaneous		
3-8050.396	**159 000 617**	RC Filter Kit (for relay use), 2 per kit with inductive loads

Signet i-Go® 8058 Signal Converter

3-8058-1

3-8058-2

3-8058-3

The Signet i-Go® 8058 Signal Converter accepts any 4 to 20 mA signal and converts it into the Signet digital (S^3L) format, the serial data format used by the Signet 8900, 9900 instruments and Profibus Concentrator. When used with the 8900 Multi-Parameter Controller, 9900 Transmitter or the Profibus Concentrator, the measurement type and operating range are defined in the setup menu. When used with level, temperature and pressure ProcessPro transmitters, the 8058 is configured at the factory to the user's specifications. **If connecting an 8058-2 to a 9900 Transmitter or Profibus Concentrator, use Channel 1 only.**

The wire-mount single-channel version is easily mounted anywhere in the interconnecting wiring between the sensor and the instrument.

The DIN rail mounted dual-channel version can convert one or two separate 4 to 20 mA inputs into a digital (S^3L) output.

Features

- **Connects with level, temperature, pressure and Multi-Parameter Signet instruments**
- **Up to two 4 to 20 mA sensor inputs with -2**
- **Connects additional measurement parameters to Signet Multi-Parameter instruments**
- **In-line wire or DIN rail mountable**

Applications

- **Dissolved Oxygen Monitoring and Control in Wastewater**
- **Chlorine Dioxide for Disinfection**
- **Specific Ion**
- **BOD**
- **TOC**
- **Alkalinity**
- **Ozone Monitoring**
- **Conductivity**
- **Chlorine Injection Control**
- **Tank Level Monitoring**

Specifications

General			
Input		4 to 20 mA current loop, passive (external power required)	
Input Range		3.6 to 22.1 mA	
Output		Digital (S^3L) output	
Accuracy		± 32 µA @ 25 °C	
Resolution		< 16 µA	
Update Rate		500 mS	
Temp. Drift		± 1 µA per °C, max.	
Electrical			
Power Requirement		4.5 to 6.5 VDC < 3.0 mA	
Max. Voltage		35 VDC	
Max. Current		40 mA	
Isolation		Up to 48 VAC/DC	
Voltage Drop		5 VDC max.	
		Reverse polarity protected	
Cable			
	3-8058-1	400 mm (15 in.) input, 200 mm (8 in.) output	
	3-8058-2	No cable provided (customer supplied)	
	3-8058-3	Special order	
Max. Recommended Cable Extensions			
	Loop in	305 m (1000 ft)	
	Digital (S^3L) out	per Digital (S^3L) guidelines	
Environmental			
Operating Ambient Temperature		-10 °C to 55 °C	14 °F to 131 °F
Storage Temperature		-20 °C to 85 °C	-4 °F to 185 °F
Relative Humidity		3-8058-1: 0 to 100%, condensing	
		3-8058-2: 0 to 90%, non-condensing	
		3-8058-3: 0 to 100%, condensing	
Shipping Weight			
		3-8058-1	0.09 kg	0.20 lb
		3-8058-2	0.11 kg	0.25 lb
		3-8058-3	0.09 kg	0.20 lb
Standards and Approvals			
		CE, FCC	
		RoHS compliant, China RoHS	

Dimensions

3-8058-2 DIN Rail mount

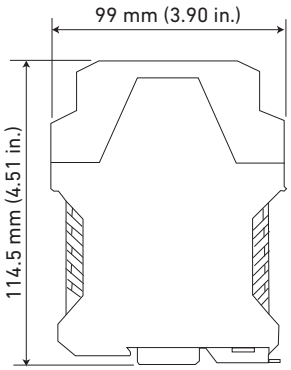

Front View

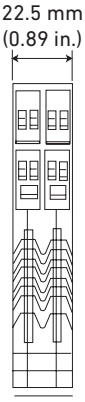

Side View

System Overview

Panel Mount	Pipe, Tank, Wall Mount	Automation System
Signet Instruments 8900 9900 9950	Signet Instruments 9900 9950 with 3-8050 Universal Mount Kit	0486 Profibus Concentrator and Customer Supplied Programmable Logic Controller or Programmable Automation Controller
 **OR** 	 **OR**  **+** 	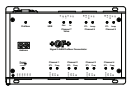 **+** 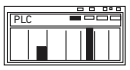

Signet
i-Go® 8058
Signal Converter

OR

OR

Any transmitter or other device with 4 to 20 mA output

All sold separately

Ordering Information

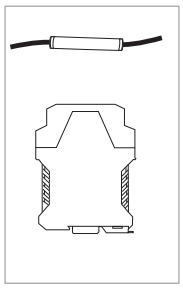

Mfr. Part No.	Code	Options
4 to 20 mA output converted to a digital (S^3L) output		
3-8058-1	**159 000 966**	Single input wire-mount converter with short cable; for use with the 8900, 9900 or Profibus Concentrator
3-8058-2	**159 000 967**	Two input DIN rail mount converter (customer supplied cable) for use with the 8900
3-8058-3	**Special order**	Special order. Level System orders when ordering with GF Level Transmitter, and 9900 or 9950. Contact factory for details

Accessories and Replacement Parts

Mfr. Part No.	Code	Description
6205-0002	**159 000 858**	1-meter length DIN rail
6205-0003	**159 000 859**	End clip for DIN rail
5523-0222	**159 000 392**	Cable (per foot), 2 cond. w/shield, 22 AWG
5523-0322	**159 000 761**	Sensor cable (per ft), 3 cond. plus shield, 22 AWG

8900 Multi-Parameter and Customized Instrument Enclosures

These enclosures offer a simple solution for the customer who doesn't have time to install Signet meters into panels. Whether it's a display monitor or controller, these panels make installation easy. Just mount the instrument enclosure on the wall using the integral mounting points, and wire the sensor inputs and outputs to the DIN rail terminal blocks.

With the optional DIN rail mounted power supply and optional power cord, the enclosure is simply plug-and-play. Use the easy part-number configurator to customize the enclosure to your application. Standard enclosure choices include four different sizes and either a solid or clear hinged door.

The Signet instrument is mounted through the solid door or behind a clear door. Both enclosure styles are equipped with stainless steel hinges and padlockable latches. The enclosure can be configured with multiple conduit ports for easy field wiring; a simplified wiring diagram is included. Each prewired instrument enclosure is factory-tested before shipping. No other industrial piping systems manufacturer offers the product quality and efficiency as GF Piping Systems.

Features

- **Wall-mount gray fiberglass enclosure with hinged door**
- **Four enclosure sizes with two door options (solid or clear)**
- **NEMA 4X or NEMA4X rating, depending on door option**
- **Stainless steel latches and hinges**
- **Lockable latches for added security**
- **Controller pre-wired to terminal blocks**
- **DIN rail grounding and wiring terminals, 16–22 AWG**
- **Terminal layout wiring diagram provided for ease of installation**
- **2, 4, or 6 pre-drilled wire entries with liquid tight cord grips**
- **Controller installed on a metal hinged faceplate behind a clear door (clear door option)**
- **Optional USB type data loggers**
- **Optional 8' grounded power cord**
- **Optional 4–20 mA adapters available for non GF sensors**
- **Ease of installation for hassle-free system integration**
- **Customized enclosures are quoted upon request**

Dimensions

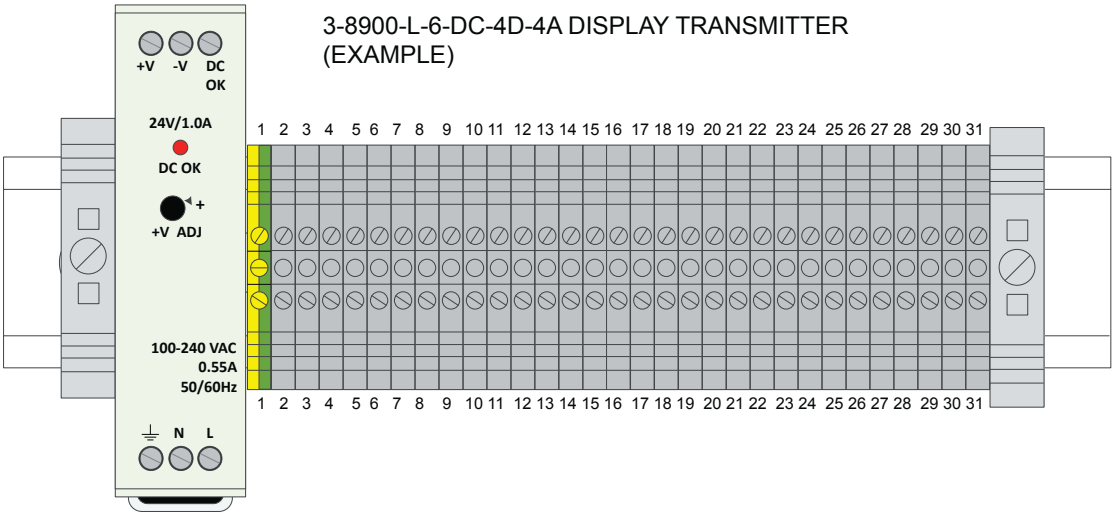

1. EARTH GROUND
2. + 5VDC (freq input 1 black)
3. Freq Input 1 (red)
4. GND (freq input 1 shield)
5. + 5VDC (freq input 2 black)
6. Freq Input 2 (red)
7. S3L Input 2 (red)
8. GND (freq input 2 white/shield)
9. + 5VDC (freq input 2 black)
10. S3L Input 1 (red)
11. GND (freq input 2 white/shield)
12. Analog Output 1 +
13. Analog Output 1 -
14. Analog Output 2 +
15. Analog Output 2 -
16. Analog Output 3 +
17. Analog Output 3 -
18. Analog Output 4 +
19. Analog Output 4 -
20. Relay 1 Common
21. Relay 1 N.O.
22. Relay 1 N.C.
23. Relay 2 Common
24. Relay 2 N.O.
25. Relay 2 N.C.
26. Relay 3 Common
27. Relay 3 N.O.
28. Relay 3 N.C.
29. Relay 4 Common
30. Relay 4 N.O.
31. Relay 4 N.C.

Ordering Information

CP Encloser Part Number	Enclosure Sizes (inch)		Door Type & NEMA Rating		Cord Grips with Hole Cutouts		Power Cable	
	Order	Description	Order	Description	Order	Description	Order	Description
3-8900-XXXX	1	12x10x7	1	Solid fiberglass (NEMA 4)	2	2	0	NO
	2	14x12x8			4	4	1	120 VAC
	3	18x12x7	2	Fiberglass with clear polycarbonate inlay (NEMA 4X)	6	6	2	240 VAC
	4	18x16x8						

Example Needed Item

CP Encloser Part Number	Enclosure Sizes	Door Type & NEMA Rating	Cord Grips and Hole	Power Cable
3-8900-4160	4	1	6	0

Custom enclosures are available, contact your area sales manager or your local GF sales office.

Signet 0486 Profibus Concentrator

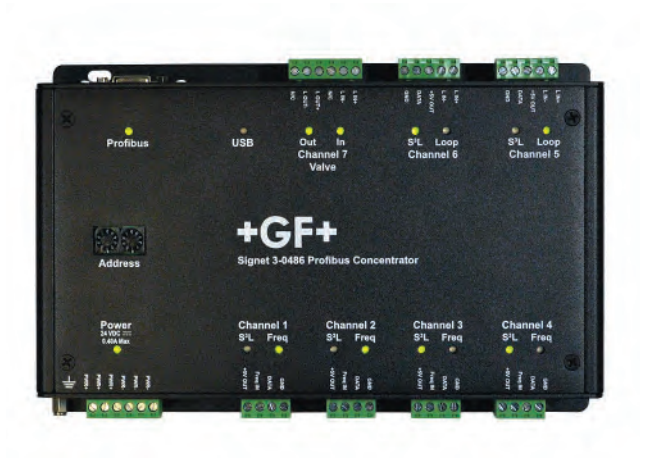

The Signet 0486 Profibus Concentrator allows for simplified connection of Signet sensors to a PROFIBUS network. The 0486 supports six sensor interfaces and a 4 to 20 mA current loop proportional valve interface. The 0486 supports PROFIBUS DPV1 and is available with either DB9 or M12 network connectors.

The 0486 sensor interfaces are multifunctional. All six inputs are compatible with Signet digital (S^3L) sensors, four inputs are compatible with frequency output flow sensors, and two inputs are compatible with 4 to 20 mA current loops. The 0486 PLC interface allows for complete control of the Signet sensors. The programmer is able to configure the sensor for the specific needs of their application, read measurements in engineering units, and gather diagnostic data to ensure accuracy and correctness of readings.

In addition to interfacing to Signet sensors the six (S^3L) inputs will also support the 8059 four channel relay module allowing for on/off control of GF valves or other devices. Up to six 8059 can be connected to a single 0486 giving the user the ability to control 24 on/off devices.

The proportional valve interface is designed to interface with Georg Fischer electric and pneumatic actuators offering proportional valve positioning control or other 4 to 20 mA current loop devices. The interface will send a 4 to 20 mA current loop to the proportional interface, and read back a 4 to 20 mA current loop signal from the valve to ensure proper valve positioning.

Fail-safe control of valves is built into the 0486. The programmer is able to configure the state of each individual relay, off or on, and the current level of the proportional valve interface in case of communications disruption. This will ensure that the system will fail in a safe, known state.

The 0486 supports diagnostic messaging for the sensors; the programmer can read the state of each sensor to ensure control is based on accurate readings. Mis-wiring, probe failure, or other events will be reported back to the PLC for proper handling and alerting.

Features

- **Interface six Signet sensor or relay modules and a proportional valve to a PROFIBUS network with a single service**
- **Four channels support (S^3L) or flow frequency devices**
- **Two channels support (S^3L) or 4 to 20 mA current loops**
- **One channel for dedicated 4 to 20 mA current loop input and output, ideal for proportional valve control or other current loop uses**
- **Support for PROFIBUS DP V1 and DP V0**
  - **Supports 9.6K to 12M bits/second network speeds**
  - **System and sensor diagnostic support (DP V1)**
  - **Fail-safe for 8059 Relay Modules and proportional valve outputs on communication failure**
- **Simplifies the programming of sensors, saving programming time and reducing errors**
- **Convenient DIN Rail or surface mountable enclosure**

Applications

- **Automation Upgrades**
- **Filter and RO Skids**
- **Neutralization Systems**
- **Water and Wastewater Treatment**
- **Pool and Spa Control**
- **Aquatic Animal Life Support Systems and Aquaculture**

Specifications

General	
Channels	4 channels digital (S^3L) or frequency input (open collector or sinusoidal)
	2 channels digital (S^3L) or 4 to 20 mA current loop
	1 channel 4 to 20 mA current loop input/output for valve positioning or current loop uses
Accuracy	Frequency, accuracy ± 0.5% of reading max error @ 25 °C, resolution 1 uS
	4 to 20 mA current loop input, accuracy ± 32 uA @ 25 °C, Resolution 16 uA
	4 to 20 mA current loop output, accuracy ± 32 uA @ 25 °C, resolution 6 uA
Terminal Plug Type	Pluggable screw types, 24 to 12 AWG
Enclosure	
Material	Aluminum 6063 T3 and 5052 H32 powder coated
Mounting	Surface (not included)
	35 mm DIN rail mounts (included)
Input Power	
DC	24 VDC ±10% @ 10 W max., 0.40 A max.
Input Specifications	
Digital (S^3L)	Channels 1, 2, 3, 4, 5 and 6
Output Power	5 VDC regulated @ 20 mA
Overcurrent Protected	Each channel independently protected
	A short on a channel will not impair the other channels
Frequency	Channels 1, 2, 3 and 4
Range	1 to 1300 Hz
4 to 20 mA Current Loop Input	Channels 5, 6 and 7
Maximum Voltage	40 VDC
Maximum Current	40 mA
Maximum Voltage Drop	5 VDC
Min. Update Rate	100 mS
Reverse Voltage and Over Current Protected	
Output Specifications	
4 to 20 mA Current Output	Channel 7
Max. Excitation Voltage	24 VDC
Min. Excitation Voltage	12 VDC
Max. Resistance	250 Ω @ 12 VDC
	500 Ω @ 18 VDC
	750 Ω @ 24 VDC
Min. Update Rate	100 mS
Environmental	
Operating Temperature	-10 °C to 70 °C (14 °F to 158 °F)
Storage Temperature	-20 °C to 85 °C (-4 °F to 185 °F)
Relative Humidity	5 to 95% non-condensing

Profibus		
Output Signal	Profibus-DP V1 according to IEC 61158-2	
DP Function	Slave	
Transfer Rates	9.6 kbps to 12 Mbps	
Signal Coding	NRZ Code	
Physical Layer	RS 485	
Connection 3-0486-D	9-pin D-sub female connector	
Connection 3-0486-M	M12 connector (Special order)	
Shipping Weight		
	1.4 kg	3.0 lb
Standard and Approvals		
	RoHS compliant, China RoHS, Made in USA from US and Imported Parts	
	Profibus Certified	
	Manufactured under ISO 9001 for Quality	
	Safety: UL 61010-1, CAN/CAS-C22.2 No. 61010-1, IEC 61010-1:2010	
	EMC: EN 61000-6-3:2007+A1, IEC 61000-6-3:2006+A1, FCC 15.107 Class B, FCC 15.109 Class B, FCC 15.109(g) Class B, EN 61000-6-2	

Dimensions

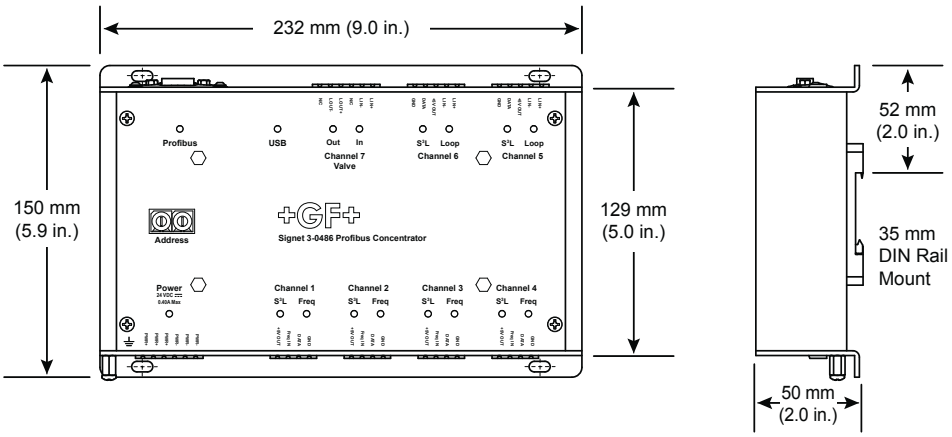

Support

- 2250 Hydrostatic Level
- 2350 Temperature
- 2450 Pressure or Hydrostatic Level
- 515, 525, 2536, 2540, 2000, 2507, 2100, 2551 or 2552 Flow
- 2610-51 Dissolved Oxygen
- 2751 pH/ORP Smart Sensor Electronics
- 2850 Conductivity
- 8058 iGo Signal Converter
- 8059 Relay Module
- PA11, 21, 30 - 90 Pneumatic Actuators Pilot Valve and 5-Series DIASTAR Pneumatically Actuated Diaphragm Valves On/Off Control (requires 8059)
- EA15 - 250 Electric Actuator On/Off Control and Type 104 Electrically Actuated Ball Valves (requires 8059)
- DSR 500 -1, -2, or -3 Pneumatic Valve Positioner
- EA15 - 250 with Electric Valve Positioner

Ordering Information

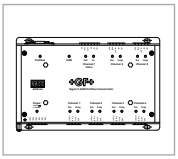

Mfr. Part No.	Code	Description
3-0486-D	**159 001 839**	DB9 Profibus Concentrator

Special Order Options - Please consult the factory

3-0486-M Profibus Concentrator with M12 connector

Accessories and Replacement Parts

Mfr. Part No.	Code	Description
6682-1104	**159 001 712**	Loop power plug, 4-pos, right angle
6682-0051	**159 866 089**	Terminal block plug, 5-pos
6682-0061	**159 866 090**	Terminal block plug, 6-pos
3-0486.390	**159 310 266**	Profibus DIN mount kit (two DIN mount plates and six screws)

Signet 8059 External Relay Modules

Signet 8059 External Relay Modules supplement the output capabilities of certain host instruments such as the Signet 8900 Multi-Parameter Controllers or Profibus Concentrator. AC-powered versions accept universal line voltage, and also provide 24 VDC output that can be used to power the host instrument or other device(s).

The host instrument controls relay operation by way of a single digital (S^3L) connection. The compact plastic housing is DIN rail mountable and includes LED annunciators for each relay, plus one each for power-on and data transfer or test mode.

Features

- **External relays controlled by host instrument**
- **AC and DC powered versions**
- **DC power output (AC versions)**
- **DC power pass-through (DC versions) to simplify wiring**
- **Digital (S^3L) pass-through to simplify sensor wiring**
- **Red LED annunciators for each relay**
- **Green LED indicators for power and digital (S^3L) data transfer**
- **Relay can be tested locally, and also via the host instrument**

LISTED
MEASURING EQUIPMENT
77CJ

Specifications

General			
Input		Digital (S^3L) via host instrument	
Type		DIN rail mountable	
Terminals		Standard screw-type	
Material			
Enclosure		Noryl® UL 94 V-O	
Electrical			
Power Requirements			
	8059-4 AC	100-240 VAC ±10% regulated, 50/60 Hz, 20 VA	
	8059-4	12 to 24 VDC ±10% regulated	
DC Output			
	8059-4 AC	24 VDC regulated, 300 mA	
Isolation		> 5,000 Vrms	
Relays			
	Type	SPDT 250 VAC/30 VDC/5 A	
	Resolution	2 ms (in pulse mode)	
	Response Time	< 100 ms	
	Annunciators	Red LED, 1 per relay	
Environmental			
Operating Temperature		-10 °C to 55 °C	14 °F to 131 °F
Storage Temperature		-20 °C to 85 °C	-4 °F to 185 °F
Relative Humidity		0 to 90% (non-condensing)	
Maximum Altitude		2,000 m (6,561 ft)	
Shipping Weight			
		0.37 kg	0.8 lb
Standards and Approvals			
		CE, FCC, UL, CUL	
		China RoHS	
		Manufactured under ISO 9001 for Quality and ISO 14001 for Environmental Management and OHSAS 18001 for Occupational Health and Safety	

Dimensions

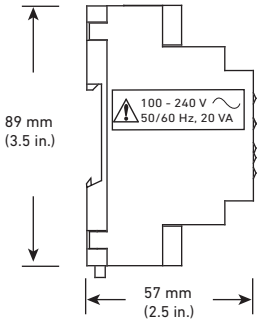

Side View

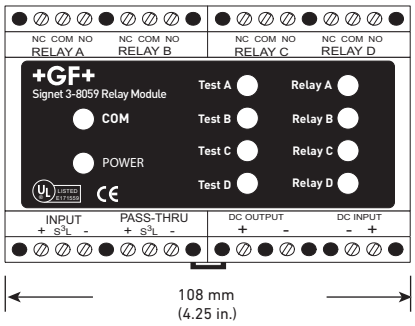

Face View (3-8059-4 shown)

Noryl® is a registered trademark of SABIC Innovative Plastics

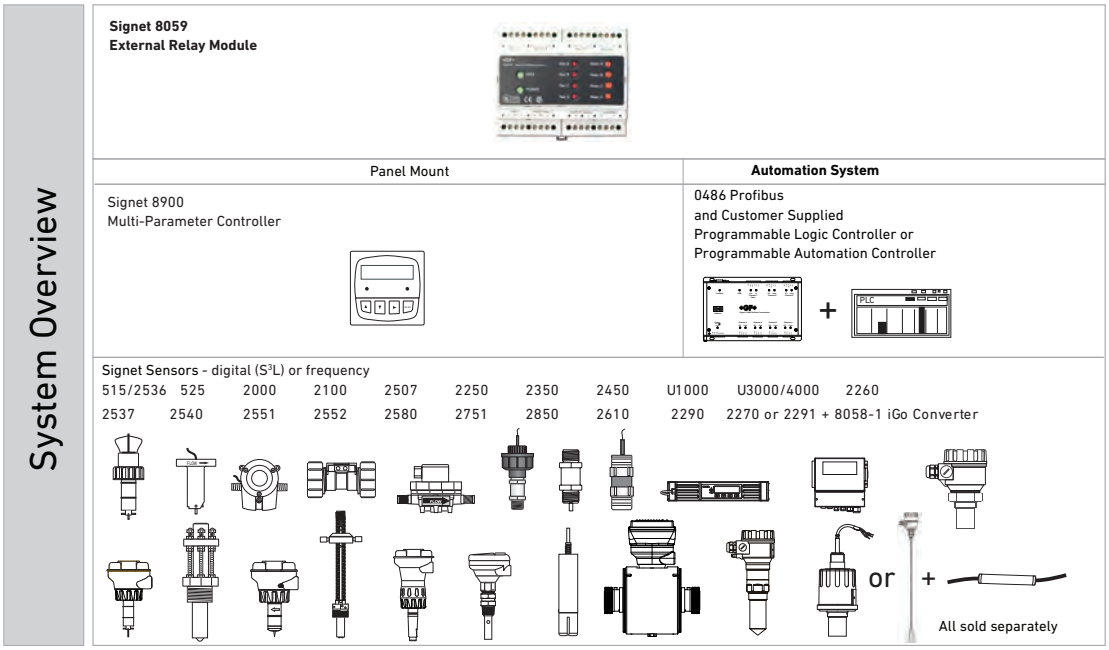

Ordering Notes

1) Use an RC filter kit to protect relays from voltage spikes associated with inductive loads.
2) DIN railing and clips are available for mounting a relay module.
3) The -AC version will supply enough voltage to power the 8900 when using the 12-24 VDC power module.

Please refer to Wiring, Installation, and Accessories sections for more information.

Ordering Information

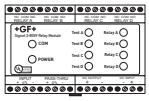

Mfr. Part No.	Code	Power Input and Output Options
External Relay Module		
4 Relay module		
3-8059-4	**159 000 772**	12 to 24 VDC ±10% regulated with pass-through DC output (minus 0.7 volts)
3-8059-4AC	**159 000 773**	100 to 240 VAC with 24 VDC output ±10% regulated

Accessories and Replacement Parts

Mfr. Part No.	Code	Description
3-8050.396	**159 000 617**	RC Filter Kit for relay use (2 per kit) with inductive loads
6205-0002	**159 000 858**	DIN rail, 1-meter
6205-0003	**159 000 859**	End clip, DIN rail

Signet Flow Sensor Specification Matrix

		2580	2551	2552	2536	515	2537	2540
Sensor Style		Full Bore Plastic Magmeter	Insertion Magmeter	Insertion Metal Magmeter	Insertion Paddlewheel	Insertion Paddlewheel	Insertion Paddlewheel	Insertion Paddlewheel
Operating Range m/s (ft/s)		0.02 to 10 (0.07 to 33)	0.05 to 10 m/s (0.15 to 33 ft/s)		0.1 to 6 (0.3 to 20)	0.3 to 6 (1 to 20)	0.1 to 6 (0.3 to 20)	
Installation Mounting Styles		Union ends/nuts, flanges/gaskets	Signet fittings offered in various plastic and metal for sizes 1/2 - 12 inches. Above 12 inches special order.	Customer supplied threaded fittings	Signet fittings offered in various plastic and metal for sizes 1/2 - 12 inches. Above 12 inches special order.			Customer supplied threaded saddle/ weld-on fittings
Pipe Size Range		1", 2", 4"	DN15 to DN900 (½ to 36 in.)	DN50 to DN2550 (2 to 102 in.)	DN15 to DN900 (½ to 36 in.)	DN15 to DN900 (½ to 36 in.)	DN50 to DN200 (½ to 8 in.)	DN40 to DN900 (1½ to 36 in.)
Wetted Materials	**Sensor Body**	PVC	PP or PVDF	316L SS	PP, PVDF or PVC	PP or PVDF		316 SS
	Rotor	N/A			PVDF or ETFE			17-4PH-1 Stainless Steel
	Rotor Pin (choice of)	N/A		Tungsten Carbide GRP 1, 316 SS	Titanium, Tantalum, Stainless Steel, Ceramic, Hastelloy-C, or PVDF			Tungsten Carbide GRP 1, 316 SS
	O-ring	FKM	FKM or EPR (EPDM) or FFKM	FKM	FKM or EPR (EPDM) or FFKM	FKM or EPR (EPDM) or FFKM	FKM or EPR (EPDM) or FFKM	FKM or EPR (EPDM)
	Other	Titanium (grade 2) electrodes	316L SS Hastelloy-C, or Titanium	PVDF insulator	None			Carbon Fiber reinforced PTFE (bearings)
* **Fluid Temperature (°C) Fluid Temperature (°F)**		0 °C to 60 °C (32 °F to 140 °F)	0 °C to 85 °C 32 °F to 185 °F	-15 °C to 85 °C (5 °F to 185 °F)	-18 °C to 85 °C 0 °F to 185 °F	-18 °C to 100 °C 0 °F to 212 °F	-18 °C to 85 °C 0 °F to 185 °F	-18 °C to 100 °C (0 °F to 212 °F)
** **Max. Operating Pressure**		10 bar (145 psi) @ 23 °C (73 °F)	10.3 bar (150 psi)	20.7 bar (300 psi) @ 25 °C (77 °F)	14 bar (200 psi)		12.5 bar (180 psi)	17 bar (250 psi)
Standards and Approvals		CE, FCC, CUL Recognized Component, NSF (Pending) RoHS compliant, China RoHS, NEMA-4X (enclosure)	CE, FCC, UL (display version only), CUL, RoHS compliant, China RoHS, NSF, NEMA-4X (enclosure)	CE, FCC, RoHS compliant, China RoHS	CE, FCC, RoHS compliant, China RoHS, NSF	RoHS compliant, China RoHS, Lloyd's Register, NSF	CE, FCC, UL, RoHS compliant, China RoHS, NSF, NEMA-4X (enclosure)	CE, FCC, RoHS compliant, China RoHS
Power Requirements		24 VDC, Max 24W (12 to 24 VDC)	5 to 24, 24 VDC, ±10%, regulated	5 to 24, 24 VDC, ±10%, regulated	5 to 24 VDC, ±10%, regulated	None	5 to 24 VDC, ±10%, regulated	
Output		Frequency or digital, and 4 to 20 mA output	Frequency, digital (S^3L), 4 to 20 mA output or relay	Frequency, digital, or 4 to 20 mA output	Open collector	AC frequency	Open collector, 4 to 20 mA, digital (S^3L), AC Relay, Solid State Relay	Open Collector
Compatible Signet Flow Instruments		All except 8150				All	All except 8150	
Comments		Partially filled pipe detection, on-the-fly configuration with bluetooth app	Features empty pipe detection, bi-directional flow, optional multi-language display	Features empty pipe detection, hot-tap version available, bi-directional flow	General Purpose Sensor with installation fittings for many materials		Various output versions available to suit application needs	Steel sensor, low flow capability requires no custom fittings
Moving Parts		No	No	No	Yes			
Suitable for High Purity Applications		No, (>20 µS/cm)	for >20 µS	No	Yes			No

*** Derated by Pressure and Materials**
**** Derated by Temperature and Materials**







525	220/330	U1000	U3000-U4000	2000	2507	2100
Insertion Paddlewheel	Portable Ultrasonic	Ultrasonic	Ultrasonic	In-line Rotor		In-line Turbine
0.5 to 6 (1.6 to 20)	0.1 to 20 m/s (0.32 to 65.62 f/s)	0.1 to 10 m/s (0.33 to 33 f/s)	0.1 to 20 m/s (0.32 to 65.62 f/s)	0.11 to 12.11 (lpm) (0.03 to 3.2) (gpm)	0.1 to 12 (lpm) (0.026 to 3.170) (gpm)	0.38 to 38 (lpm) (0.10 to 10) (gpm)
Metalex installation fittings for metal pipe	Strap-on, Flexible guide rails	Fixed clamp-on	Clamp-on, Flexible guide rails	¼ in. threads		Socket, flare end, or hose barb fittings
DN15 to DN300 (½ to 12 in.)	Type PF220 - 13 mm to 1000 mm (0.5 in. to 39 in.) Type PF330 - 13 mm to 2000 mm (0.5 in. to 78 in.)	d22 mm to d180 mm (3/4 in. to 6 in.)	13 mm to 2000 mm (0.5 in. to 78 in.)	¼ in. tubing		DN8, DN10, DN15 (1/4 in., 3/8 in., 1/2 in.)
316 SS	N/A			PPS	PVDF	
17-4PH-1 Stainless Steel	N/A			PEEK®	PVDF	
Tungsten Carbide GRP 1, 316 SS	N/A					
N/A				FKM		FKM or EPR (EPDM)
Carbon Fiber reinforced PTFE (bearings), Klinger sil C-4401 (gasket)	Applicable pipe materials: PVDF-SYGEF, PP-PROGEF, PE-ELGEF, PB-INSTAFLEX, ABS, PVC-U/PVC-C, Mild Steel, Ductile Iron, Stainless Steel 316, Copper Applicable pipe linings: Rubber, Glass, Concrete, Epoxy, Steel	Applicable pipe materials: PVDF-SYGEF, PP-PROGEF, PE-ELGEF, PB-INSTAFLEX, ABS, PVC-U/PVC-C, Mild Steel, Ductile Iron, Stainless Steel 316	Applicable pipe materials: PVDF-SYGEF, PP-PROGEF, PE-ELGEF, PB-INSTAFLEX, ABS, PVC-U/PVC-C, Mild Steel, Ductile Iron, Stainless Steel 316, Copper Applicable pipe linings: Rubber, Glass, Concrete, Epoxy, Steel	N/A	PTFE	Ceramic
-18 °C to 149 °C (0 °F to 300 °F)	-20 °C to 135 °C (-4 °F to 275 °F)	0 °C to 85 °C (32 °F to 185 °F)	-20 °C to 135 °C (-4 °F to 275 °F)	0 °C to 80 °C (32 °F to 176 °F)	-30 °C to 120 °C (-22 °F to 248 °F)	-20 °C to 70 °C (-4 °F to 158 °F)
103 bar (1500 psi @ safety factor 1.5)	N/A			5.5 bar (80 psi)		9.3 bar (130 psi)
RoHS compliant, China RoHS	CE, RoHS compliant Safety: BS EN 61010 EMC: BS EN 61326 - 1:2006, BS EN 61326-2-3:2006 Power supply: EN61204 - 3 UL, CUL, TUV, CB, CE	CE, RoHS compliant Safety: BS EN 61010-1:2001 EMC: BS EN 61326 - 1:2006, BS EN 61326-2-3:2006 Environmental: BS EN 60068-1:1995,BS EN 60068-2-1:2007, BS EN 60068-2-2:2007		N/A	CE, FCC, RoHS compliant, China RoHS	
None	Battery Powered. Input charger voltage is 90-264 VAC	12 to 24 V AC or DC	12 to 24 V AC or DC; 86 to 264 V AC (47Hz to 63Hz)	5 to 24 VDC, ±10%, regulated		
AC frequency	Analog output, pulse output, USB interface (PF 330), RS232 Interface (PF 330)	Analog output, pulse output	Analog output, pulse output, alarm output, USB interface (U4000), RS232 Interface (U4000)	Open collector output		
All	N/A	8900, 9900	N/A	All except 5090, 8150		
For high pressure, high temperature applications	Non-invasive measurement of liquid flow			Lowest flow range: 110 mL/min. PPS body for tough service, good chemical resistance	Excellent chemical resistance, note significant pressure drop.	Excellent chemical resistance, replaceable electronics, affordable package
Yes	No		No	Yes		
No	Yes		Yes	No	Yes	

Signet 2580 FlowtraMag™ Meter

(Smart Phone not included)

The Signet 2580 FlowtraMag is a full-bore plastic in-line style magnetic flow meter. The PVC body with titanium electrodes has no moving parts, and is two to three times lighter in weight compared to traditional metal magmeters on the market. It is designed for high accuracy flow measurement in short pipe runs, making it an ideal solution for industrial applications where performance and simplicity are important.

The FlowtraMag design is factory calibrated with certificate at ±1% of reading accuracy. It is offered in corrosion resistant materials to provide long-term reliability with minimal maintenance costs. The LED indicators show at-a-glance system status, including normal operation, zero flow and partially filled pipe detection.

The flow meter provides three different outputs; field selectable frequency or digital (S^3L) as well as analog 4 to 20 mA. The FlowtraMag is capable of temperature readings of the media using the Signet 0252 Configuration Tool or GF Config Tool Bluetooth® app. The GF Config Tool Bluetooth® app supports iOS and Android for simple on-the-fly user configuration.

These versatile, easy-to-install meters deliver accurate flow measurement in pipe sizes of 1", 2" and 4", optimized for performance in short pipe runs often associated with final effluent lines, well heads and water treatment skids.

Download on the App Store

ANDROID APP ON Google play

Features

- **No moving parts**
- **Lighter in weight compared to traditional metal magmeters**
- **Reduced straight run requirements, ideal for final effluent lines, wellheads and skids**
- **Factory calibrated with certificate (±1% of reading accuracy)**
- **Partially filled pipe detection status indicator**
- **Visual LED indicators make sensor status clear and easy to read**
- **Reverse flow direction configurable with 0252 Configuration Tool or GF Config Tool Bluetooth® App**
- **Capable of temperature readings of the media using the 0252 Configuration Tool or GF Config Tool Bluetooth® App**
- **One device with three different outputs: field selectable Frequency or Digital (S^3L), and analog 4 to 20 mA**
- **On-the-fly configuration with GF Config Tool Bluetooth® App**
- **Bluetooth® 4.2 capable, support iOS and Android for simple user configuration**

Applications

- **Chemical Processing/Production**
- **Cooling Tower**
- **Filtration Systems**
- **Water and Wastewater Treatment**
- **Municipal and Industrial Water Distribution**
- **Pool and Aquatics**
- **Process Control, Water Process Flow**
- **Reverse Osmosis**
- **Scrubber Systems**
- **Metal Recovery and Landfill Leachate**
- **Mining**

U.S. and International Patents Pending

Specifications

General			
Pipe Size Range		1 in., 2 in., 4 in. (ASTM only). Inquire for other sizes	
Flow Range		0.02 to 10 m/s	0.07 to 33 ft/s
3-2580-P-T-010		0.53 LPM to 266.35 LPM	0.14 to 70.36 GPM
3-2580-P-T-020		2.23 LPM to 1112.60 LPM	0.59 to 293.92 GPM
3-2580-P-T-040		8.72 LPM to 4357.83 LPM	2.30 to 1151.22 GPM
Minimum Conductivity		20 µS/cm – water based	
Power Cable Wire		7.6 m (25 ft) 2-conductor shielded	
Output Cable Wire		7.6 m (25 ft) 5-conductor shielded	
Cable wires may be extended up to 305 m (1000 ft), field splice or special order only			
Wetted Materials			
Flow Tube Body		PVC	
Electrode		Titanium	
O-rings		FKM seal	
Performance			
Accuracy		± 1% of reading plus ± 0.01 m/s (0.033 ft/s), reference condition 50 µS/cm and water based	
Repeatability		± 0.5% of reading @ 25 °C (77 °F)	
Low Flow Cutoff		0.02 m/s (0.07 ft/s) (adjustable via 0252 Configuration Tool or GF Config Tool App)	
Electrical			
DC Power (Functional Rating)		24 VDC, max 24 W (12 to 32 VDC)	
Reverse Polarity Protected		Up to 35 VDC	
Over-Voltage Maximum Rating		35 VDC	
Current Output			
Passive (low power)		4 to 20 mA per ANSI-ISA 50.00.01 Class H	
Active Output		4 to 20 mA	
Passive Loop Voltage		12 to 32 VDC	
Loop Accuracy		±32 µA (@ 25 °C @ 24 VDC)	
Loop Resolution		5 µA	
Loop Span		3.8 mA to 21 mA	
Error Condition		None, 3.6 mA or 22 mA	
Max. Cable		305 m (1000 ft)	
Max. Loop Resistance		600 Ω @ 24 VDC	
		Compatible with PLC, PC or similar equipment	
Frequency Output			
Frequency		5 to 24 VDC, 50 mA max.	
Frequency Range		0 to 1500 Hz	
Max. Pull-up Voltage		30 VDC, 10k pull-up recommended	
		Compatible with Signet 8900, 9900, 9950, and 0486 Profibus Concentrator	
Digital (S^3L) Output			
Digital (S^3L)		4.5 to 5.5 VDC	
		Serial ASCII, TTL level 9600 bps Compatible with Signet 8900, 9900, 9950 and 0486 Profibus Concentrator	
Max. Cable Length		Application dependent	
Environmental Requirements			
Enclosure		NEMA 4X / IP65	
Relative Humidity		0 to 95% non-condensing	
Storage Temperature		-10 °C to 60 °C (14 °F to 140 °F)	
Operating Temperature			
	Ambient	-10 °C to 60 °C	14 °F to 140 °F
	Media	0 °C to 60 °C	32 °F to 140 °F
UL Environmental Rating		UL 50, Type 6P Storage	
Altitude		4,000 m	13,123 ft
Pressure/Temperature Ratings			
Maximum Operating Pressure		10 bar @ 23 °C (145 psi @ 73 °F)	
1" and 2"		3.5 bar @ 60 °C (51 psi @ 140 °F)	
4"		2.27 bar @ 60 °C (33 psi @ 140 °F)	
Shipping Weight			
3-2580-P-T-010		3.4 kg	7.5 lbs
3-2580-P-T-020		4.46 kg	9.83 lbs
3-2580-P-T-040		8.3 kg	18.28 lbs
Standards and Approvals			
		CE, FCC, NSF pending	
		UL, CUL Recognized Component	
		RoHS compliant, China RoHS	
		Manufactured under ISO 9001 for Quality, ISO 14001 for Environmental Management and OHSAS 18001 for Occupational Health and Safety.	

Dimensions

1 in.

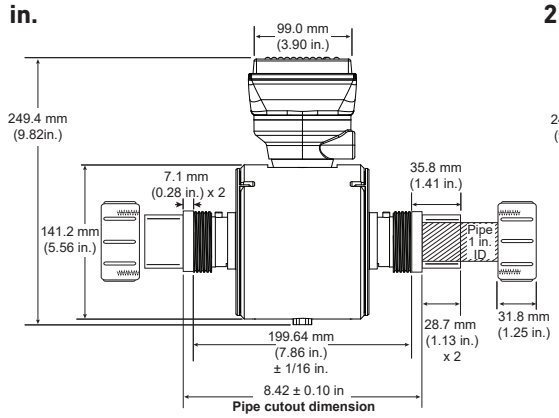

2 in.

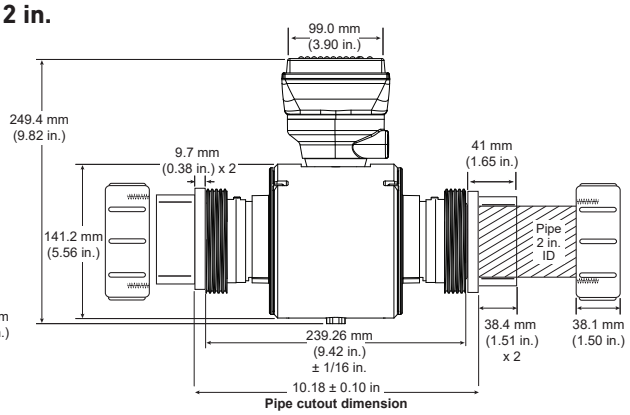

4 in.

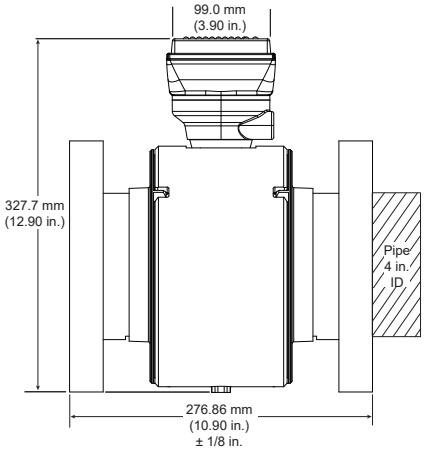

Signet Model D100 DeviceLink

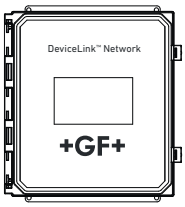

System Overview

Stand-Alone	Panel Mount	Pipe, Tank, Wall Mount	4 to 20 Output	Automation System
Signet Model 2580 FlowtraMag	Signet Instruments 8900 9950 9900 9900-1BC	Signet Instruments 9900-1P 9900-1BC with Rear Enclosure	Customer Supplied Chart Recorder, Programmable Logic Controller or Programmable Automation Controller	0486 Profibus Concentrator and Customer Supplied Programmable Logic Controller or Programmable Automation Controller

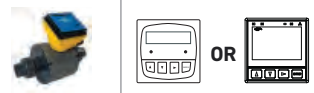

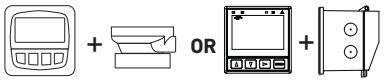

Signet Model 2580 FlowtraMag

3-2580-P-T-010

3-2580-P-T-020

3-2580-P-T-040

Temperature/Pressure Graph

Note:
The pressure/temperature graphs are specifically for the Signet sensor. During system design the specifications of all components must be considered. In the case of a metal piping system, a plastic sensor will reduce the system specification.

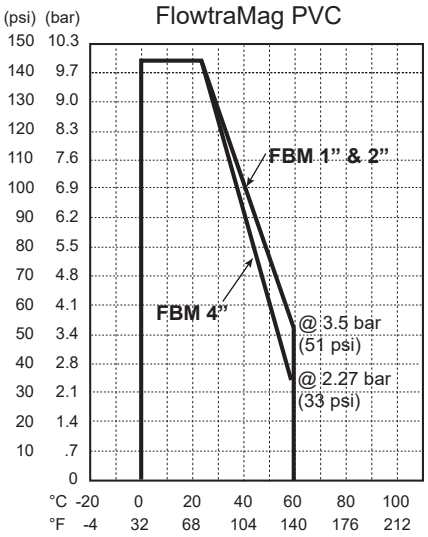

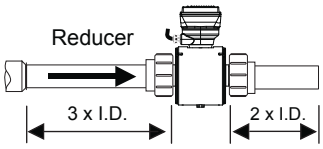

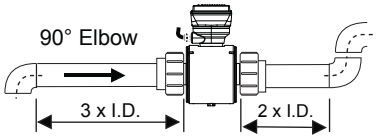

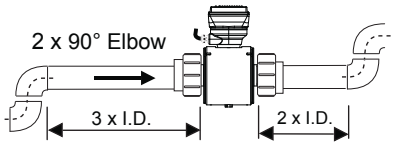

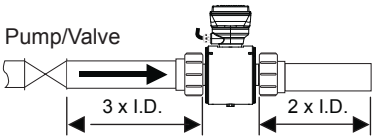

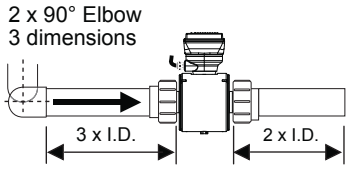

Ordering Information

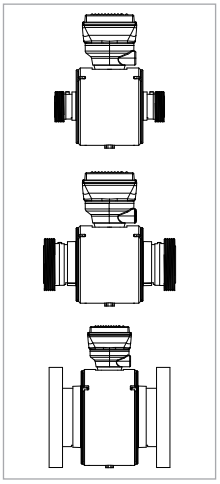

Mfr. Part No.	Code	Description
3-2580-P-T-010	**159 001 874**	FlowtraMag Blind, PVC Union, FKM (1 in.)
3-2580-P-T-020	**159 001 875**	FlowtraMag Blind, PVC Union, FKM (2 in.)
3-2580-P-T-040	**159 001 876**	FlowtraMag Blind, PVC Flange, FKM (4 in.)

Inquire for other sizes

Accessories and Replacement Parts

Mfr. Part No.	Code	Description
3-0252	**159 001 808**	Configuration Tool
854-040	-	4 inch SCH 80 Van Stone Flange
37X002009	-	4 inch EPR (EPDM) Full Face Flange Gasket - 150# ANSI bolt pattern
37X002118	-	4 inch FKM Full Face Flange Gasket - 150# ANSI bolt pattern
37Z000069	-	4 inch Van Stone Flange Bolt Kit 316 SS - 150# (UNC bolts, SAE washers and nuts)

Signet 2551 Magmeter Flow Sensor

Available in a variety of wetted materials and ideal for pipe sizes up to DN900 (36 in.)

The Signet 2551 Magmeter is an insertion style magnetic flow sensor that features no moving parts. The patented* sensor design is available in corrosion-resistant materials to provide long-term reliability with minimal maintenance costs. Material options include PP with stainless steel, PVDF with Hastelloy-C, or PVDF with Titanium. Utilizing the comprehensive line of Signet installation fittings, sensor alignment and insertion depth is automatic. These versatile, simple-to-install sensors deliver accurate flow measurement over a wide dynamic range in pipe sizes ranging from DN15 to DN900 (½ to 36 inches), satisfying the requirements of many diverse applications.

Signet 2551 Magmeters offer many output options of frequency/digital (S^3L) or 4 to 20 mA which are available on both the blind and display versions. The frequency or digital (S^3L) sensor output can be used with Signet's extensive line of flow instruments while the 4 to 20 mA output can be used for a direct input to PLCs, chart recorders, etc. Both the 4 to 20 mA output and digital (S^3L) sensor interface is available for long distance signal transmission. An additional benefit is the empty pipe detection which features a zero flow output when the sensors are not completely wetted. Also, the frequency output is bi-directional while the 4 to 20 mA output can be set for uni- or bi-directional flow using the display or the 3-0252 USB to Digital (S^3L) Configuration/Diagnostic setup tool which connects to PCs for programming capabilities.

In addition, the display version of the 2551 Magmeter is available with relays and features permanent and resettable totalizer values, which can be stored and seen on the display. Also, the display contains multi-languages with English, Spanish, German, French, Italian and Portuguese menu options.

Features

- **Test certificate included for -X0, -X1**
- **Patented Magmeter technology***
- **No moving parts**
- **Bi-directional flow**
- **Empty pipe detection**
- **Installs into pipe sizes DN15 to DN900 (0.5 to 36 in.)**
- **Operating range 0.05 to 10 m/s (0.15 to 33 ft/s)**
- **Accurate measurement even in dirty liquids**
- **Polypropylene and PVDF retaining nuts standard, Valox optional**
- **4 to 20 mA, digital (S^3L), frequency, relay output (Display only)**
- **No pressure drop**
- **Corrosion resistant materials; PP or PVDF with SS, Hastelloy-C, or Titanium**
- **Multi-language display menu available**

(3-2551-PX-XX version only)

Applications

- **Chemical Processing**
- **Water and Wastewater Monitoring**
- **Metal Recovery and Landfill Leachate**
- **Commercial Pools, Spas, and Aquariums**
- **HVAC**
- **Irrigation**
- **Scrubber Control**
- **Neutralization Systems**
- **Industrial Water Distribution**

* U.S. Patent No: 7,055,396 B1

Specifications

General			
Operating Range	0.05 to 10 m/s	0.15 to 33 ft/s	
Pipe Size Range	DN15 to DN900	½ in. to 36 in.	
Linearity	±1% of reading plus 0.1% of full scale		
Repeatability	±0.5% of reading @ 25 °C (77 °F)		
Minimum Conductivity	20 µS/cm		
Minimum Reynolds Number	4500		
Wetted Materials			
Sensor Body/Electrodes and Grounding Ring	-P0, -P1, -P2: PP/316L SS		
	-T0, -T1, -T2: PVDF/Titanium		
	-V0, -V1, -V2: PVDF/Hastelloy-C		
O-rings	FKM (standard) EPR (EPDM), FFKM (optional)		
Case	PBT		
Display Window	Polyamide (transparent nylon)		
Protection Rating	NEMA 4X/IP65		
Electrical			
Power Requirements	4 to 20 mA	24 VDC ±10%, regulated, 22.1 mA max.	
	Frequency	5 to 24 VDC ±10%, regulated, 15 mA max.	
	Digital (S^3L)	5 to 6.5 VDC, 15 mA max.	
Auxiliary (only required for units with relays)		9 to 24 VDC, 0.4 A max.	
Reverse Polarity and Short Circuit Protected			
Current Output 4 to 20 mA	Loop Accuracy	32 µA max. error (25 °C @ 24 VDC)	
	Isolation	Low voltage < 48 VAC/DC from electrodes and auxiliary power	
	Maximum Cable	300 m (1000 ft)	
	Error condition	22.1 mA	
	Max. Loop Resistance	300 Ω	
	Compatible with PLC, PC or similar equipment		
	4 to 20 mA load needed		
Frequency Output	Output Modes	Freq., or Mirror Relay (display version only)	
	Max. Pull-up Voltage	30 VDC	
	Max. Current Sink	50 mA, current limited	
	Maximum Cable	300 m (1000 ft)	
	Compatible with Signet Model 8900, 9900, 9900-1BC, 9950		
Digital (S^3L) Output	Serial ASCII, TTL level 9600 bps		
	Compatible with Model Signet 8900, 9900, 9950, 0486		
Relay Specifications (Optional with Display Version)			
#1, #2 Type	Mechanical SPDT		
Rating	5 A @ 30 VDC max., 5 A @ 250 VDC max.		
#3 Type	Solid State		
	50 mA @ 30 VDC, 50 mA @ 42 VAC		
Hysteresis	User adjustable for exiting alarm condition		
Alarm On Trigger Delay	Adjustable (0 to 9999.9 sec.)		
Relay Modes	Off, Low, High, Window, and Proportional Pulse		
Relay Source	Flow Rate, Resettable Totalizer		
Error Condition	Selectable; Fail Open or Closed		
Display			
Characters		2 x 16	
Contrast		User-set in four levels	
Backlighting (only on relay versions)		Requires external 9-24 VDC, 0.4 mA max.	
Max. Temperature/Pressure Rating			
Storage Temperature		-20 °C to 70 °C	-4 °F to 158 °F
Relative Humidity		0 to 95% (non-condensing)	
Operating Temperature	Ambient	-10 °C to 70 °C	14 °F to 158 °F
	Media	0 °C to 85 °C	32 °F to 185 °F
Maximum Operating Pressure		10.3 bar @ 25 °C	150 psi @ 77 °F
		1.4 bar @ 85 °C	20 psi @ 185 °F
Environmental			
	NEMA 4X / IP65 Enclosure (with cap installed)		
Shipping Weight			
	0.680 kg	1.50 lb	
Standards and Approvals			
	CE, FCC, UL, CUL, NSF (3-2551-PX-XX version only)		
	RoHS compliant, China RoHS, Made in USA from US and Imported Parts		
	Manufactured under ISO 9001 for Quality and ISO 14001 for Environmental Management and OHSAS 18001 for Occupational Health and Safety		

See Temperature and Pressure graphs for more information.

Dimensions

Pipe Range	
1/2 to 4 in.	-X0 = 58 mm (2.3 in.)
5 to 8 in.	-X1 = 91 mm (3.6 in.)
10 to 36 in.	-X2 = 167 mm (6.6 in.)

X = Sensor Body P, T, or V

Blind version

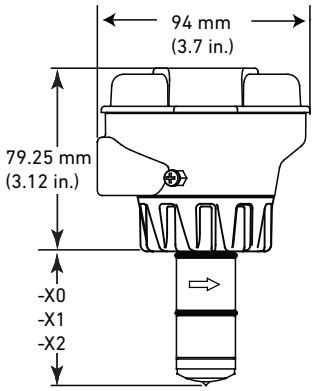

Display version

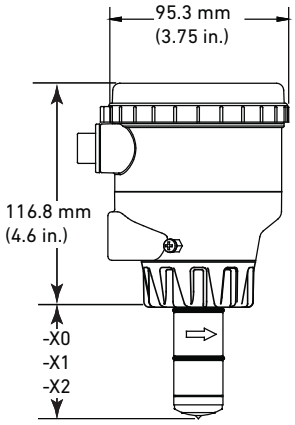

Signet Model D100 DeviceLink

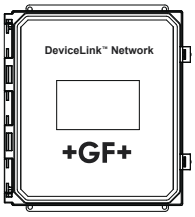

System Overview

Stand-Alone	Panel Mount	Pipe, Tank, Wall Mount	4 to 20 Output	Automation System
Signet Model 2551 Magmeter	Signet Instruments 8900 9900 9900-1BC 9950	Signet Instruments 9900-1P 9900-1BC with Rear Enclosure	Customer Supplied Chart Recorder, Programmable Logic Controller, or Programmable Automation Controller	0486 Profibus Concentrator and Customer Supplied Programmable Logic Controller or Programmable Automation Controller

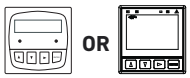

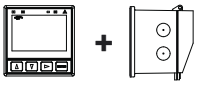

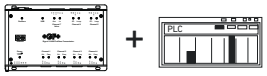

Signet 2551 Magmeter

Signet Fittings

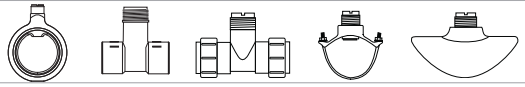

All sold separately

Temperature/Pressure Graphs

Note:
The pressure/temperature graphs are specifically for the Signet sensor. During system design the specifications of all components must be considered. In the case of a metal piping system, a plastic sensor will reduce the system specification. When using a PVDF sensor in a PVC piping system, the fitting will reduce the system specification.

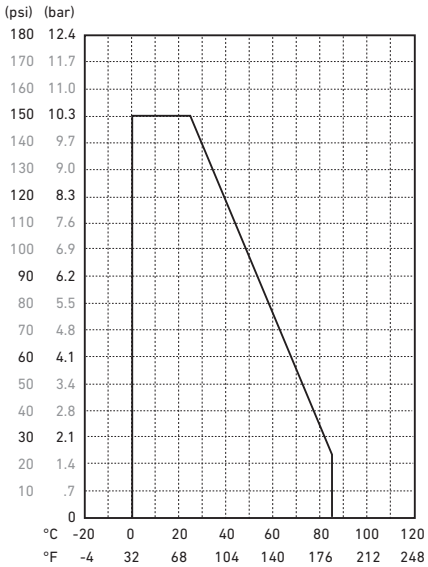

Application Tips
- Note minimum process liquid conductivity requirement is 20 µs/cm
- Install sensor using standard Signet installation fittings only
- Sensor is capable of retrofitting into existing 515 and 2536 fittings

Please refer to Wiring, Installation, and Accessories sections for more information.

Ordering Information

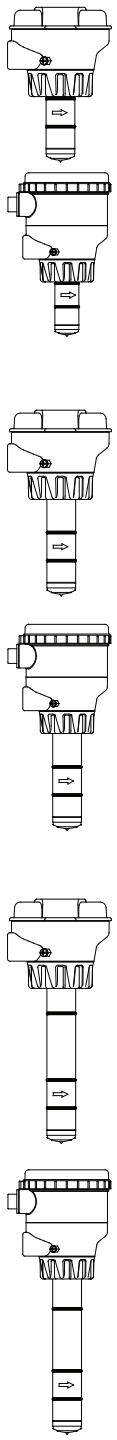

Pipe Size	Mfr. Part No.	Code	Sensor Body
Frequency or Digital (S^3L) output programmable open collector for use with any Signet Flow Instrument or the 8900 or 9900 Instruments**			
DN15 to DN100 (½ to 4 in.)			
No Display			
	3-2551-P0-11	**159 001 105**	Polypropylene and 316L SS
	3-2551-T0-11	**159 001 108**	PVDF and Titanium
	3-2551-V0-11	**159 001 257**	PVDF and Hastelloy-C
with Display, two SPDT relays, one solid state relay			
	3-2551-P0-21	**159 001 267**	Polypropylene and 316L SS
	3-2551-T0-21	**159 001 436**	PVDF and Titanium
	3-2551-V0-21	**159 001 269**	PVDF and Hastelloy-C
with Display			
	3-2551-P0-41	**159 001 261**	Polypropylene and 316L SS
	3-2551-T0-41	**159 001 433**	PVDF and Titanium
	3-2551-V0-41	**159 001 263**	PVDF and Hastelloy-C
DN125 to DN200 (5 to 8 in.)			
No Display			
	3-2551-P1-11	**159 001 106**	Polypropylene and 316L SS
	3-2551-T1-11	**159 001 109**	PVDF and Titanium
	3-2551-V1-11	**159 001 258**	PVDF and Hastelloy-C
with Display, two SPDT relays, one solid state relay			
	3-2551-P1-21	**159 001 268**	Polypropylene and 316L SS
	3-2551-T1-21	**159 001 437**	PVDF and Titanium
	3-2551-V1-21	**159 001 270**	PVDF and Hastelloy-C
with Display			
	3-2551-P1-41	**159 001 262**	Polypropylene and 316L SS
	3-2551-T1-41	**159 001 434**	PVDF and Titanium
	3-2551-V1-41	**159 001 264**	PVDF and Hastelloy-C
DN250 to DN900 (10 to 36 in.)			
No Display			
	3-2551-P2-11	**159 001 107**	Polypropylene and 316L SS
	3-2551-T2-11	**159 001 448**	PVDF and Titanium
	3-2551-V2-11	**159 001 450**	PVDF and Hastelloy-C
with Display, two SPDT relays, one solid state relay			
	3-2551-P2-21	**159 001 435**	Polypropylene and 316L SS
	3-2551-T2-21	**159 001 454**	PVDF and Titanium
	3-2551-V2-21	**159 001 456**	PVDF and Hastelloy-C
with Display			
	3-2551-P2-41	**159 001 432**	Polypropylene and 316L SS
	3-2551-T2-41	**159 001 460**	PVDF and Titanium
	3-2551-V2-41	**159 001 462**	PVDF and Hastelloy-C

**This option is a programmable open collector output that is available with display versions only.

Ordering Information (continued)

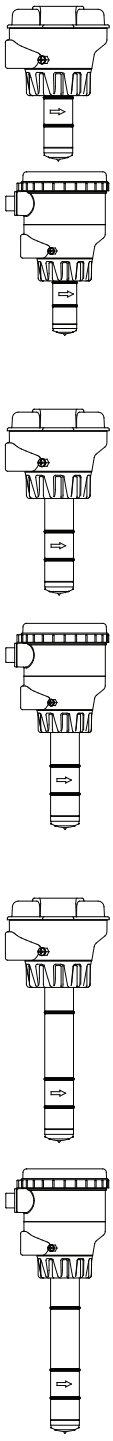

Pipe Size	Mfr. Part No.	Code	Sensor Body
4 to 20 mA output for use with PLC, PC or similar equipment			
DN15 to DN100 (½ to 4 in.)			
No Display			
	3-2551-P0-12	**159 001 110**	Polypropylene and 316L SS
	3-2551-T0-12	**159 001 113**	PVDF and Titanium
	3-2551-V0-12	**159 001 259**	PVDF and Hastelloy-C
with Display, two SPDT relays, one solid state relay			
	3-2551-P0-22	**159 001 273**	Polypropylene and 316L SS
	3-2551-T0-22	**159 001 439**	PVDF and Titanium
	3-2551-V0-22	**159 001 275**	PVDF and Hastelloy-C
with Display			
	3-2551-P0-42	**159 001 279**	Polypropylene and 316L SS
	3-2551-T0-42	**159 001 442**	PVDF and Titanium
	3-2551-V0-42	**159 001 281**	PVDF and Hastelloy-C
DN125 to DN200 (5 to 8 in.)			
No Display			
	3-2551-P1-12	**159 001 111**	Polypropylene and 316L SS
	3-2551-T1-12	**159 001 114**	PVDF and Titanium
	3-2551-V1-12	**159 001 260**	PVDF and Hastelloy-C
with Display, two SPDT relays, one solid state relay			
	3-2551-P1-22	**159 001 274**	Polypropylene and 316L SS
	3-2551-T1-22	**159 001 440**	PVDF and Titanium
	3-2551-V1-22	**159 001 276**	PVDF and Hastelloy-C
with Display			
	3-2551-P1-42	**159 001 280**	Polypropylene and 316L SS
	3-2551-T1-42	**159 001 443**	PVDF and Titanium
	3-2551-V1-42	**159 001 282**	PVDF and Hastelloy-C
DN250 to DN900 (10 to 36 in.)			
No Display			
	3-2551-P2-12	**159 001 112**	Polypropylene and 316L SS
	3-2551-T2-12	**159 001 449**	PVDF and Titanium
	3-2551-V2-12	**159 001 451**	PVDF and Hastelloy-C
with Display, two SPDT relays, one solid state relay			
	3-2551-P2-22	**159 001 438**	Polypropylene and 316L SS
	3-2551-T2-22	**159 001 455**	PVDF and Titanium
	3-2551-V2-22	**159 001 457**	PVDF and Hastelloy-C
with Display			
	3-2551-P2-42	**159 001 441**	Polypropylene and 316L SS
	3-2551-T2-42	**159 001 461**	PVDF and Titanium
	3-2551-V2-42	**159 001 463**	PVDF and Hastelloy-C

Accessories and Replacement Parts

Mfr. Part No.	Code	Description
O-rings		
1220-0021	**198 801 000**	O-ring, FKM (2 required per sensor)
1224-0021	**198 820 006**	O-ring, EPR (EPDM) (2 required per sensor)
1228-0021	**198 820 007**	O-ring, FFKM (2 required per sensor)
1223-0151	**159 000 236**	O-ring EPR (EPDM) -151 .103W 2.987ID
Replacement Transducers		
3-2551-P0	**159 001 211**	PP/316L SS, DN15 to DN100 (½ to 4 in.) pipe
3-2551-P1	**159 001 212**	PP/316L SS, DN125 to DN200 (5 to 8 in.) pipe
3-2551-P2	**159 001 444**	PP/316L SS, DN250 to DN900 (10 to 36 in.) pipe
3-2551-T0	**159 001 213**	PVDF/Titanium, DN15 to DN100 (½ to 4 in.) pipe
3-2551-T1	**159 001 214**	PVDF/Titanium, DN125 to DN200 (5 to 8 in.) pipe
3-2551-T2	**159 001 445**	PVDF/Titanium, DN250 to DN900 (10 to 36 in.) pipe
3-2551-V0	**159 001 376**	PVDF/Hastelloy-C, DN15 to DN100 (½ to 4 in.) pipe
3-2551-V1	**159 001 377**	PVDF/Hastelloy-C, DN125 to DN200 (5 to 8 in.) pipe
3-2551-V2	**159 001 446**	PVDF/Hastelloy-C, DN250 to DN900 (10 to 36 in.) pipe
Replacement Electronics Module		
3-2551-11	**159 001 215**	Magmeter electronics, frequency or digital (S^3L) output
3-2551-12	**159 001 216**	Magmeter electronics, 4 to 20 mA output
3-2551-21	**159 001 372**	Magmeter display electronics, frequency or digital (S^3L) output, with relays
3-2551-22	**159 001 373**	Magmeter display electronics, 4 to 20 mA output w/relays
3-2551-41	**159 001 374**	Magmeter display electronics, frequency or digital (S^3L) output
3-2551-42	**159 001 375**	Magmeter display electronics, 4 to 20 mA output
Other		
P31536	**198 840 201**	Sensor plug, Polypropylene
7310-1024	**159 873 004**	24 VDC Power Supply, 10W, 0.42 A
7310-2024	**159 873 005**	24 VDC Power Supply, 24W, 1.0 A
7310-4024	**159 873 006**	24 VDC Power Supply, 40W, 1.7 A
7310-6024	**159 873 007**	24 VDC Power Supply, 60W, 2.5 A
7310-7024	**159 873 008**	24 VDC Power Supply, 96W, 4.0 A
3-8050.390-1	**159 001 702**	Retaining nut replacement kit, NPT, Valox
3-8050.390-3	**159 310 116**	Retaining nut replacement kit, NPT, PP
3-8050.390-4	**159 310 117**	Retaining nut replacement kit, NPT, PVDF
3-8551.521	**159 001 378**	Clear plastic cap for display
1222-0042	**159 001 379**	O-ring for clear plastic cap, EPR (EPDM)
3-0252	**159 001 808**	Configuration Tool (Blind version only)
3-9900.392-1	**159 000 839**	Liquid Tight Connector Kit, NPT (1 pc.)
3-8050.396	**159 000 617**	RC Filter Kit (for relay use), 2 per kit with inductive loads
1223-0151	**159 000 236**	O-ring EPR (EPDM) -151 .103W 2.987ID
3-2551.395	**159 310 096**	2551 display with relay LEDS replacement displays
3-2551.395-1	**159 310 097**	2551 display only

Signet 2552 Metal Magmeter Flow Sensors

The Signet 2552 Metal Magmeter from Georg Fischer features all-stainless steel construction. The PVDF nosepiece and FKM O-rings are the only other wetted materials. The 2552 installs quickly into standard 1¼ in. or 1½ in. pipe outlets, and is adjustable to fit pipes from DN50 to DN2550 (2 to 102 inches). Two sensor lengths allow maximum flexibility to accommodate a variety of hardware configurations, including ball valves for hot-tap installations.

When equipped with the frequency output, the 2552 is compatible with any externally powered Signet flow instrument, while the digital (S^3L) output enables multi-channel compatibility with the Signet 8900 Multi-Parameter Controller. Select the blind 4 to 20 mA current output to interface directly with data loggers, PLCs or telemetry systems. Key features include Empty Pipe Detection, LED-assisted troubleshooting, and -bi-directional span capability (in 4 to 20 mA models).

The Signet 3-0252 USB to Digital (S^3L) Configuration/ Diagnostic Tool is available to customize every performance feature in the 2552 so it can be adapted to the user's application requirements.

Features

- **NIST test certificate included**
- **Award winning hot-tap magnetic flow sensor up to DN2550 (102 in.) (external fittings such as Saddles and Weldolets)**
- **Patented Magmeter technology***
- **Operating range 0.05 to 10 m/s (0.15 to 33 ft/s)**
- **Reliable operation in harsh environments**
- **Repeatable: ±0.5% of reading @ 25 °C**
- **Three output options: 4 to 20 mA, Frequency, Digital (S^3L)**
- **ISO or NPT Threads**

Applications

- **Municipal Water Distribution**
- **Process and Coolant Flow**
- **Chemical Processing**
- **Wastewater**
- **Mining Applications**
- **Water Process Flow**
- **HVAC**

* U.S. Patent No: 7,055,396 B1

Specifications

General				
Operating Range	Minimum		0.05 m/s	0.15 ft/s
	Maximum	pipes to DN1200 (48 in.)	10 m/s	33 ft/s
		pipes over DN1200 (48 in.)	3 m/s	10 ft/s
Pipe Size Range	DN50 to DN2550		2 in. to 102 in.	
Linearity	±1% of reading plus 0.1% of full scale			
Repeatability	±0.5% of reading @ 25 °C			
Accuracy	±2% of measured value*			
Minimum Reynolds Number	4500			
*In reference conditions where the fluid is water at ambient temperature, the sensor is inserted at the correct depth and there is a fully developed flow profile which is in compliance with ISO 7145-1982 (BS 1042 section 2.2)				
Minimum Conductivity	20 µs/cm			
Wetted Materials				
Body and Electrodes	316L stainless steel			
Insulator	PVDF			
O-rings	FKM			
Cable	4-cond + shield, PVC jacket (Fixed cable models) or Water-resistant rubber cable assembly with Turck® NEMA 6P connector			
Power Requirements				
4 to 20 mA	24 VDC ±10%, regulated, 22.1 mA maximum			
Frequency	5 to 24 VDC ±10%, regulated, 15 mA maximum			
Digital (S^3L)	5 to 6.5 VDC 15 mA maximum			
Reverse Polarity and Short Circuit Protected				
Cable Options				
Fixed cable	7.6 m		25 ft	
Detachable water tight sensor cable with Turck® connector (sold separately) two lengths: 4 m (13 ft) or 6 m (19.5 ft)				
Electrical				
Current Output (4 to 20 mA)	Programmable and Reversible			
	Loop Accuracy		32 µA max. error (@ 25 °C @ 24 VDC)	
	Temperature Drift		±1 µA per °C max.	
	Power Supply Rejection		±1 µA per V	
	Isolation		Low voltage < 48 VAC/DC from electrodes and auxiliary power	
	Maximum Cable		300 m	1000 ft
	Max. Loop Resistance		300 Ω	
	Error Condition		22.1 mA	
Frequency Output	Compatible with		Signet 8900, 9900 and 9900-1BC, 9950	
	Max. Pull-up Voltage		30 VDC	
	Short Circuit Protected		≤30 V @ 0 Ω pull-up for one hour	
	Reverse Polarity Protected		to -40 V for 1 hour	
	Over-voltage Protected to +40 V for 1 hour			
	Max. Current Sink		50 mA, current limited	
	Maximum Cable		300 m	1,000 ft
Digital (S^3L) Output	Compatible with		Signet 8900, 9900, 9950	
	Serial ASCII, TTL level 9600 bps			
	Maximum Cable		Application dependent (See 8900 manual) in non-icing conditions	
Operating Temp.	Ambient (non-icing conditions)		-15 °C to 70 °C	5 °F to 158 °F
	Media		-15 °C to 85 °C	5 °F to 185 °F
Max. Operating Pressure	20.7 bar @ 25 °C		300 psi @ 77 °F	
Hot-Tap Installation Requirements				
Maximum Installation Pressure			20.7 bar	300 psi
Maximum Installation Temp (Insertion/Removal)			40 °C	104 °F
Do not use hot-tap installation where temperatures will exceed 40 °C or if hazardous liquids are present.				
Shipping Weights				
3-2552-2X-A-11/A-12	2.50 kg	5.51 lb		
3-2552-2X-B-11/B-12	2.30 kg	5.07 lb		
3-2552-3X-A-11/B-11/A-12/B-12	4.00 kg	8.81 lb		
Standards and Approvals				
	CE, FCC			
	RoHS compliant, China RoHS, Made in USA from US and Imported Parts			
	NEMA 4 (IP65)	Fixed cable models		
	NEMA 6P (IP68)	Submersible cable models only. Signet recommends maximum 3 m (10 ft) submersion depth for maximum 10 days continuous submersion.		
	Manufactured under ISO 9001 for Quality and ISO 14001 for Environmental Management and OHSAS 18001 for Occupational Health and Safety			

Dimensions

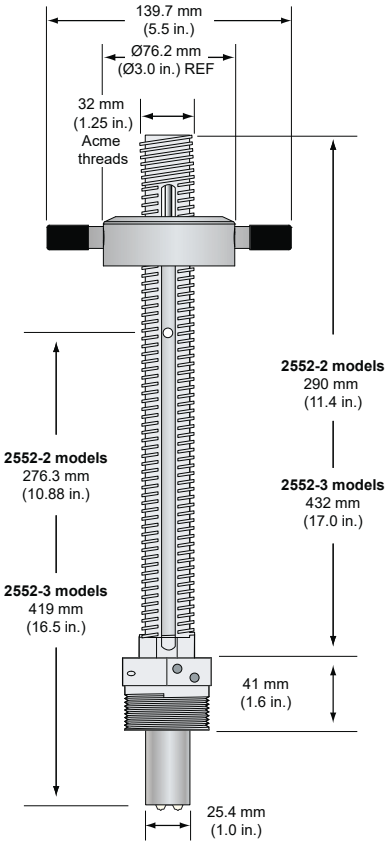

Signet Model D100 DeviceLink

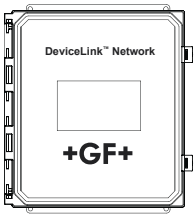

In-Line Installation

System Overview

Panel Mount	Pipe, Tank, Wall Mount	4 to 20 Output	Automation System
Signet Instruments 8900 9900 9900-1BC 9950	Signet Instruments 9900 with 3-8050 Universal Mount Kit 9900-1P 9900-1BC with Rear Enclosure 9950	Customer Supplied Chart Recorder, Programmable Logic Controller, or Programmable Automation Controller	0486 Profibus Concentrator and Customer Supplied Programmable Logic Controller or Programmable Automation Controller

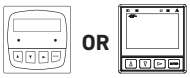

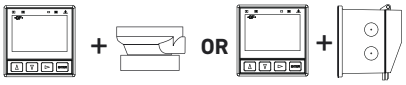

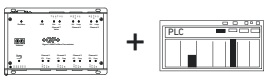

Signet 2552 Magmeter (Standard or Hot-Tap)

ball or gate valve
1¼" or 1½"

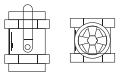

nipple
1¼" or 1½"

Weld-on weldolet
1¼" or 1½" outlet

Iron strap-on saddle
1¼" or 1½" outlet

All sold separately

Sensor Selection Guide

The 2552 Magmeter can be installed into a variety of pipe sizes. Follow the steps below to ensure that you choose the right sensor for your application.

Step 1: Determine how the sensor will be installed

A. For standard (non Hot-Tap) installations:

The height of the weldolet (threadolet) and pipe adapter(s) should be determined before the sensor is purchased.

- For retrofit installations, the stack height, or "A" dimension (see Fig. 1), is the overall height from the top of the pipe to the highest point of the stack.
- Sensor tip must be positioned at 10% of pipe ID
- For new installations, Signet recommends a weldolet (threadolet) and an adapter to accommodate the 1¼ in. (or 1½ in. for 2552-3) sensor process threads. The stack height, or "A" dimension (see Fig. 1), is the overall height from the top of the pipe to the highest point of the stack before the sensor is connected

B. For Hot-Tap installations:

The stack height of the ball valve, nipple weldolet (threadolet) and pipe adapters should be determined before the sensor is purchased.

- For retrofit installations, the ball valve must be at least a 1¼ in. (or 1½ in. for 2552-3) valve. The stack height, or "A" dimension (see Fig. 2), is the overall height from the top of the pipe to the top of the ball valve.
- Sensor tip base must be positioned at 10% of pipe ID
- For new installations, Signet recommends a 1¼ in. or 1½ in. full port ball valve, a short nipple and a weldolet (threadolet). The stack height or "A" dimension (see Fig. 2) is the overall height from the top of the pipe to the top of the ball valve before the sensor is connected.

Fig. 1
Standard installation with "A" dimension using a weldolet (threadolet)

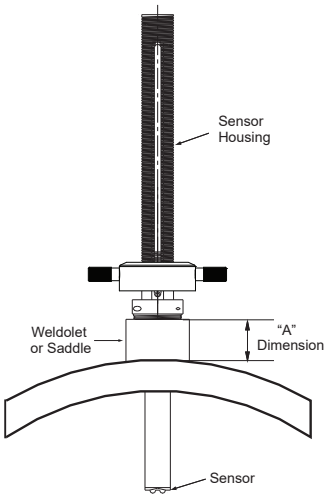

Fig. 2
Hot-Tap installation with "A" dimension using a ball valve, short nipple and weldolet (threadolet)

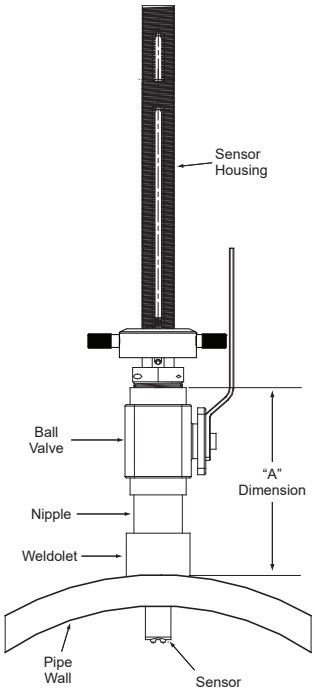

Step 2: Determine how the sensor will be installed

Once the "A" dimension is determined, go to the sensor selection table and find your "A" dimension on the left column. Next, find the appropriate pipe size at the top of the chart. To determine the correct sensor size locate where the pipe size column meets the max "A" dimension row.

			Pipe Size																									
		inches	2	2.5	3 to 3 ½	4	5	6 to 8	10	12 to 14	16	18	20	22	24	26 to 28	30 to 32	34	36 to 38	40 to 42	48	54	60	66	72	78	84	102
		DN	50	65	80 to 90	100	125	150 to 200	250	300 to 350	400	450	500	550	600	650 to 700	750 to 800	850	900 to 950	1000 to 1100	1200	1400	1500	1700	1800	2000	2100	2.58 m
Max. "A" Dim	**mm**	**inches**																										
	50.8	2	2	2	2	2	2	2	2	2	2	2	2	2	2	2	2	2	2	2	2	2	3	3	3	3	3	3
	63.5	2.5	2	2	2	2	2	2	2	2	2	2	2	2	2	2	2	2	2	2	2	2	3	3	3	3	3	3
	76.2	3	2	2	2	2	2	2	2	2	2	2	2	2	2	2	2	2	2	2	2	2	3	3	3	3	3	3
	88.9	3.5	2	2	2	2	2	2	2	2	2	2	2	2	2	2	2	2	2	2	2	2	3	3	3	3	3	3
	101.6	4	2	2	2	2	2	2	2	2	2	2	2	2	2	2	2	2	2	2	2	2	3	3	3	3	3	3
	114.3	4.5	2	2	2	2	2	2	2	2	2	2	2	2	2	2	2	2	2	2	2	2	3	3	3	3	3	
	127	5	2	2	2	2	2	2	2	2	2	2	2	2	2	2	2	2	2	2	2	2	3	3	3	3	3	
	139.7	5.5	2	2	2	2	2	2	2	2	2	2	2	2	2	2	2	2	2	2	2	2	3	3	3	3	3	
	152.4	6	2	2	2	2	2	2	2	2	2	2	2	2	2	3	3	2	3	3	3	3	3	3	3	3	3	
	165.1	6.5	2	2	2	2	2	2	2	2	2	2	3	3	3	3	3	3	3	3	3	3	3	3	3	3		
	177.8	7	2	2	2	2	2	2	2	2	2	3	3	3	3	3	3	3	3	3	3	3	3	3	3			
	190.5	7.5	2	2	2	2	2	2	2	2	3	3	3	3	3	3	3	3	3	3	3	3	3	3				
	228.6	9	2	3	3	3	3	3	3	3	3	3	3	3	3	3	3	3	3	3	3	3						
	241.3	9.5	3	3	3	3	3	3	3	3	3	3	3	3	3	3	3	3	3	3	3							
	254	10	3	3	3	3	3	3	3	3	3	3	3	3	3	3	3	3	3	3								
	266.7	10.5	3	3	3	3	3	3	3	3	3	3	3	3	3	3	3	3	3									
	279.4	11	3	3	3	3	3	3	3	3	3	3	3	3		3	3	3										
	292.1	11.5	3	3	3	3	3	3	3	3	3	3	3			3												
	304.8	12	3	3	3	3	3	3	3	3	3	3																
	317.5	12.5	3	3	3	3	3	3	3	3																		
	330.2	13	3	3	3	3	3	3	3																			
	342.9	13.5	3	3	3	3	3	3																				
	355.6	14	3	3	3	3	3																					
	375.9	14.8	3	3																								
	381	15																										

Legend:
2: Use 3-2552-2, max. insertion = 236 mm (9.3 in.)
3: Use 3-2552-3, max. insertion = 368 mm (14.8 in)

This chart is based on the thickest commonly available pipe.

Step 3: Refer to Ordering Information to select corresponding part numbers

Ordering Notes

1) Sensor insertion depth is the distance from the bottom of the sensor housing to the tip of the sensor.
2) Hot-Tap installations require a 1¼ in. or 1½ in. ball valve.
3) See Sensor Selection Guide on previous page to determine the sensor length required.

Application Tips

- Minimum process liquid conductivity requirement is 20 µS/cm.
- 1½ x 1¼ inch and 2 x 1¼ inch (2552-2 only) retrofit adapters are available for replacement installations of Signet 2552 and 2540 sensors.

Ordering Information

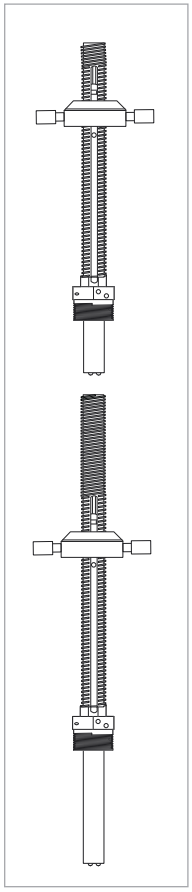

Mfr. Part No.	Code	Sensor Insertion Depth	Process Connection Thread Options
Frequency or Digital (S^3L) output for use with any Signet Flow or Multi-Parameter Instruments			
Fixed cable, 7.6 m (25 ft); no connector			
3-2552-21-A-11	**159 001 513**	9.3 inches*	1¼ inch NPT**
3-2552-22-A-11	**159 001 517**	9.3 inches*	1¼ inch ISO**
3-2552-33-A-11	**159 001 521**	14.8 inches*	1½ inch NPT**
3-2552-34-A-11	**159 001 522**	14.8 inches*	1½ inch ISO**
Watertight sensor connector; cable sold separately			
3-2552-21-B-11	**159 001 515**	9.3 inches*	1¼ inch NPT**
3-2552-22-B-11	**159 001 519**	9.3 inches*	1¼ inch ISO**
3-2552-33-B-11	**159 001 523**	14.8 inches*	1½ inch NPT**
3-2552-34-B-11	**159 001 524**	14.8 inches*	1½ inch ISO**
4 to 20 mA output			
Fixed cable, 7.6 m (25 ft); no connector			
3-2552-21-A-12	**159 001 514**	9.3 inches*	1¼ inch NPT**
3-2552-22-A-12	**159 001 518**	9.3 inches*	1¼ inch ISO**
3-2552-33-A-12	**159 001 525**	14.8 inches*	1½ inch NPT**
3-2552-34-A-12	**159 001 526**	14.8 inches*	1½ inch ISO**
Watertight sensor connector; cable sold separately			
3-2552-21-B-12	**159 001 516**	9.3 inches*	1¼ inch NPT**
3-2552-22-B-12	**159 001 520**	9.3 inches*	1¼ inch ISO**
3-2552-33-B-12	**159 001 527**	14.8 inches*	1½ inch NPT**
3-2552-34-B-12	**159 001 528**	14.8 inches*	1½ inch ISO**

* Customer must determine stack height (ball valve, nipple, weldolet, etc.). Refer to Sensor Selection on previous page to determine "A" dimension. Sensor tip must be positioned at 10% of pipe ID.

** 1¼ inch process connection is the standard thread size on the 3-2552-2X-X-XX: For the 2552-3 the 1½ inch process connection is standard and the 1¼ inch is available as a special order.

Accessories and Replacement Parts

Mfr. Part No.	Code	Description
2120-1512	**159 001 425**	1½ x 1¼ inch NPT adapter for retrofitting 2540 installation to 2552 - 316 SS
2120-2012	**159 001 426**	2 x 1¼ inch NPT adapter for retrofitting 2550 installation to 2552 - 316 SS
3-2552.392	**159 001 530**	1¼ inch NPT full port stainless steel ball valve and nipple kit
3-2552.393	**159 001 531**	1¼ inch NPT full port brass ball valve & nipple kit
3-2552.394	**159 001 532**	1½ inch NPT conduit adapter, aluminum for -1 and -2 units
4301-2125	**159 001 533**	1¼ inch NPT full port ball valve - brass
4301-3125	**159 001 387**	1¼ inch NPT full port ball valve - stainless steel
4301-3150		1-1/2 inch NPT full port SS ball valve and nipple Kit
5541-4184	**159 001 388**	4-conductor cable assembly with water-tight connector, 4 m (13 ft) for "B" series 2552
5541-4186	**159 001 389**	4-conductor cable assembly with water-tight connector, 6 m (19.5 ft) for "B" series 2552
special order	**special order**	4-conductor cable assembly with water-tight connector, cable length in 25 ft increments for "B" series 2552 see page 114
special order	**special order**	1¼ in. NPT or ISO process connection threads to replace 1½ in. NPT or ISO threads
3-0252	**159 001 808**	Configuration Tool

Signet 2536 Rotor-X Paddlewheel Flow Sensors

PVC Sensor (gray body and cap) | Standard Sensor (blue cap) | Integral Sensor | Wet-Tap Sensor

Simple to install with time-honored reliable performance, Signet 2536 Rotor-X Paddlewheel Flow Sensors are highly repeatable, rugged sensors that offer exceptional value with little or no maintenance. The Model 2536 has a process-ready open collector signal with a wide dynamic flow range of 0.1 to 6 m/s (0.3 to 20 ft/s). The sensor measures liquid flow rates in full pipes and can be used in low pressure systems.

The Signet 2536 sensors are offered in a variety of materials for a wide range of pipe sizes and insertion configurations. The many material choices including PP and PVDF make this model highly versatile and chemically compatible to many liquid process solutions.

Sensors can be installed in DN15 to DN900 (½ to 36 in.) pipes (except the 2536 PVC versions, which can be installed in DN15 to DN100 (½ to 4 in.) pipes), using Signet's comprehensive line of custom fittings. These custom fittings, which include tees, saddles, and weldolets, seat the sensor to the proper insertion depth into the process flow. The sensors are also offered in configurations for wet-tap installation requirements.

Features

- **Operating range 0.1 to 6 m/s (0.3 to 20 ft/s)**
- **Wide turndown ratio of 66:1**
- **Open-collector output**
- **Highly repeatable output**
- **Simple, economical design**
- **Installs into pipe sizes DN15 to DN900 (½ to 36 in.)**
- **PVC 2536 version DN15 to DN100 (½ to 4 in.) for concentrated Sodium Hypochlorite 12.5% applications**
- **High resolution and noise immunity**
- **Test certificate included for -X0, -X1**
- **Chemically resistant materials**

Certified to NSF/ANSI 61 & 372

(3-2536-PX version only)

Applications

- **Pure Water Production**
- **Filtration Systems**
- **Chemical Production**
- **Liquid Delivery Systems**
- **Pump Protection**
- **Scrubber/Gas Stacks**
- **Gravity Feed Lines**
- **Not suitable for gas**
- **Sodium Hypochlorite transfer/ injection/batching (3-2536-U0)**

Specifications

General			
Operating Range		0.1 to 6 m/s	0.3 to 20 ft/s
Pipe Size Range		DN15 to DN900	½ to 36 in.
	PVC	DN15 to DN100	½ to 4 in.
Linearity		±1% of max. range @ 25 °C (77 °F)	
Repeatability		±0.5% of max. range @ 25 °C (77 °F)	
Min. Reynolds Number Required		4500	
Wetted Materials			
Sensor Body		Glass-filled PP (black), PVDF (natural) or PVC (gray)	
O-rings		FKM (std) optional EPR (EPDM) or FFKM	
Rotor Pin		Titanium, Hastelloy-C or PVDF; optional Ceramic, Tantalum or Stainless Steel	
Rotor		Black PVDF or Natural PVDF; optional ETFE, with or w/o carbon fiber reinforced PTFE sleeve for rotor pin	
Electrical			
Frequency		49 Hz per m/s nominal	15 Hz per ft/s nominal
Supply Voltage		5 to 24 VDC ±10%, regulated	
Supply Current		<1.5 mA @ 3.3 to 6 VDC	<20 mA @ 6 to 24 VDC
Output Type		Open collector, sinking 10 mA max.	
Cable Type		2-conductor twisted pair with shield, 22 AWG	
Cable Length		7.6 m (25 ft) can be extended up to 305 m (1000 ft) maximum	
Max. Temperature/Pressure Rating - Standard and Integral Sensor			
	PP	12.5 bar @ 20 °C	180 psi @ 68 °F
		1.7 bar @ 85 °C	25 psi @185°F
	PVDF	14 bar @ 20 °C	200 psi @ 68 °F
		1.7 bar @ 85 °C	25 psi @ 185 °F
	PVC	12.5 bar @ 20 °C	180 psi @ 68 °F
		6.9 bar @ 60 °C	100 psi @ 140 °F
Operating Temperature			
	PP	-18 °C to 85 °C	0 °F to 185 °F
	PVDF	-18 °C to 85 °C	0 °F to 185 °F
	PVC	0 °C to 50 °C	32 °F to 122 °F
Max. Temperature/Pressure Rating - Wet-Tap Sensor			
	PP	7 bar @ 20 °C	100 psi @ 68 °F
		1.4 bar @ 60 °C	20 psi @ 140 °F
Operating Temperature		-18 °C to 60 °C	0 °F to 140 °F
Max. Wet-Tap Sensor Removal Rating		1.7 bar @ 22 °C	25 psi @ 72 °F
Shipping Weight			
	3-2536-X0	0.454 kg	1.00 lb
	3-2536-X1	0.476 kg	1.05 lb
	3-2536-X2	0.680 kg	1.50 lb
	3-2536-X3	0.780 kg	1.72 lb
	3-2536-X4	0.800 kg	1.76 lb
	3-2536-X5	0.880 kg	1.94 lb
	3-8512-X0	0.35 kg	0.77 lb
	3-8512-X1	0.37 kg	0.81 lb
Standards and Approvals			
	CE, FCC, NSF (3-2536-PX only)		
	RoHS compliant, China RoHS, Made in USA from US and Imported Parts		
	Manufactured under ISO 9001 for Quality and ISO 14001 for Environmental Management and OHSAS 18001 for Occupational Health and Safety		

See Temperature and Pressure Graphs for more information

Dimensions

Standard Mount

PVC Mount
(0.5 to 4 in. pipe range only)

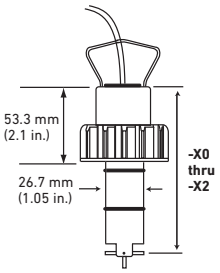

Pipe range	
0.5 to 4 in.	-X0 = 104 mm (4.1 in.)
5 to 8 in.	-X1 = 137 mm (5.4 in.)
10 in. and up	-X2 = 213 mm (8.4 in.)

Integral Mount
(shown with Transmitter sold separately)

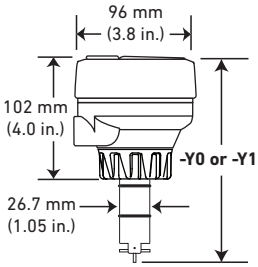

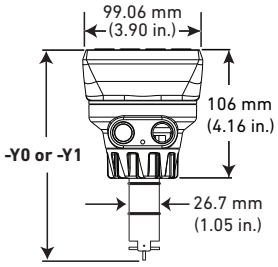

Pipe range	
0.5 to 4 in.	-Y0 = 152 mm (6.0 in.)
5 to 8 in.	-Y1 = 185 mm (7.3 in.)

Wet-Tap Mount Sensor with 3519 Wet-Tap Valve
(See 3519 product page for more information).

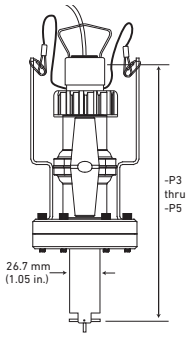

Pipe range	
0.5 to 4 in.	-P3 = 297 mm (11.7 in.)
5 to 8 in.	-P4 = 333 mm (13.1 in.)
10 in. and up	-P5 = 409 mm (16.1 in.)

Signet Model D100 DeviceLink

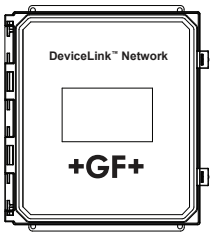

System Overview

Panel Mount	Pipe, Tank, Wall Mount	Field (Integral) Mount	Automation System
Signet Instruments 8900 9900 9900-1BC 9950	Signet Instruments 9900-1P 9900-1BC with Rear Enclosure 9950	Signet Instruments 9900 with 3-8051-X Integral Mount Kit	0486 Profibus Concentrator and Customer Supplied Programmable Logic Controller or Programmable Automation Controller

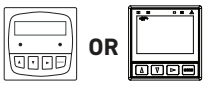

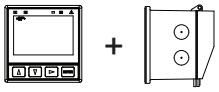

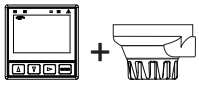

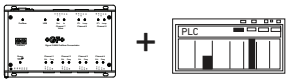

Signet 2536 PVC, Standard, Wet-Tap or 8512 Integral Mount Flow Sensors

Signet Fittings

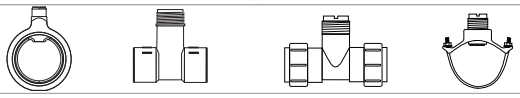

All sold separately

For overview of Wet-Tap System, see 3519 product page

Application Tips

- Use the Conduit Adapter Kit to protect the cable-to-sensor connection when used in outdoor environments. See Accessories section for more information.
- Use a sleeved rotor in abrasive liquids to reduce wear.
- Sensor plug can be used to plug installation fitting after extraction of sensor from pipe.
- For liquids containing ferrous particles, use Signet Magmeters.
- For systems with components of more than one material, the maximum temperature/pressure specification must always be referenced to the component with the lowest rating.

Temperature/Pressure Graphs

Note:
The pressure/temperature graphs are specifically for the Signet sensor. During system design the specifications of all components must be considered. In the case of a metal piping system, a plastic sensor will reduce the system specification. When using a PVDF sensor in a PVC piping system, the fitting will reduce the system specification.

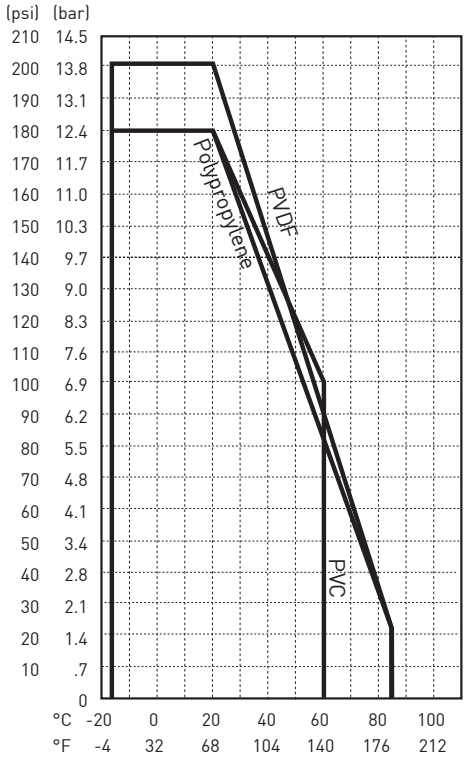

Ordering Notes

1) Most common part number combinations shown. For all other combinations contact factory.

2) Other rotor and pin materials are available for purchase from the factory and can be easily replaced in the field. See Accessories section.

Ordering Information

Model 2536 Standard Mount Paddlewheel
When choosing this style of sensor, the instrument can be mounted nearby on a pipe or wall or in a remote location up to 305 m (1000 ft) by connecting the sensor through a standard 3-8050-1 universal junction box. Standard cable length is 7.6 m (25 ft). Use Signet fittings for proper seating of the sensor into the process flow.

Mfr. Part No.	Code	Body	Rotor	Pin Material
Flow Sensor for use with remote mount instrument				
DN15 to DN100 - ½ to 4 in.				
3-2536-P0	**198 840 143**	Polypropylene	Black PVDF	Titanium
3-2536-T0	**198 840 149**	Natural PVDF	Natural PVDF	Natural PVDF
3-2536-U0	**159 001 843**	PVC	Sleeved ETFE	Titanium
3-2536-V0	**198 840 146**	Natural PVDF	Natural PVDF	Hastelloy-C
DN125 to DN 200 - 5 to 8 in				
3-2536-P1	**198 840 144**	Polypropylene	Black PVDF	Titanium
3-2536-V1	**198 840 147**	Natural PVDF	Natural PVDF	Hastelloy-C
DN250 - DN900 - 10 to 36 in.				
3-2536-P2	**198 840 145**	Polypropylene	Black PVDF	Titanium

Ordering Information (continued)

Model 2536 Integral Mount Paddlewheel

When choosing this style of sensor, the instrument is mounted directly onto the sensor for a local display. See guidelines below for instructions.

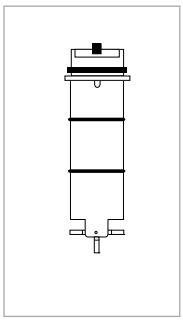

Mfr. Part No.	Code	Body	Rotor	Pin Material
Flow sensor for integral mounting on the 8150 instrument using the 3-8051-X Flow Sensor Integral Mount Kit (sold separately)				
DN15 to DN100 - ½ to 4 in.				
3-8512-P0	**198 864 513**	Polypropylene	Black PVDF	Titanium
3-8512-T0	**198 864 518**	Natural PVDF**	Natural PVDF	Natural PVDF
3-8512-V0	**198 864 516**	Natural PVDF**	Natural PVDF	Hastelloy-C
DN125 to DN200 - 5 to 8 in. (PP only)				
3-8512-P1	**198 864 514**	Polypropylene	Black PVDF	Titanium

**Natural PVDF available ½ in. to 4 in. only

Guidelines: Combining a 2536 integral mount flow sensor with an integrally mounted instrument

Once an integral mount sensor is chosen, it can be mounted directly to a field mount transmitter by following these guidelines:

a) Order the 3-8051-X flow sensor integral mounting kit (sold separately) to connect the sensor to an instrument.

b) Order a field mount transmitter (sold separately). The following part numbers are compatible: 3-9900-1.

c) Assembling the sensor with the integral adapter and instrument is quick and simple.

Model 2536 Wet-Tap Mount Paddlewheel Flow Sensor

When choosing this style of sensor, the instrument can be mounted nearby on a pipe or wall or in a remote location up to 305 m (1000 ft) by connecting the sensor through a standard 3-8050-1 universal junction box. Standard cable length is 7.6 m (25 ft). This style of sensor uses the 3519 Wet-Tap valve only (see individual product page for more information).

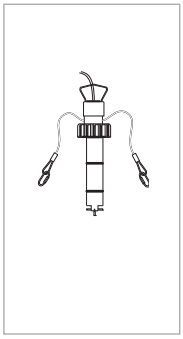

Mfr. Part No.	Code	Body	Rotor	Pin Material
Flow Sensor for wet-tap mounting with the 3519 Wet-Tap Valve (sold separately)				
DN15 to DN100 - ½ to 4 in.				
3-2536-P3	**159 000 758**	Polypropylene	Black PVDF	Titanium
DN125 to DN200 - 5 to 8 in.				
3-2536-P4	**159 000 759**	Polypropylene	Black PVDF	Titanium
DN250 to DN900 - 10 to 36 in.				
3-2536-P5	**159 000 760**	Polypropylene	Black PVDF	Titanium

Guideline: Combining a 2536 Wet-Tap Sensor with a 3519 Wet-Tap Valve

a) Once a sensor is chosen, it can be mounted in a 3519 Wet-Tap Valve (sold separately)
b) Assembling a sensor with a 3519 Wet-Tap valve is quick and simple. These parts can also be ordered as complete assemblies. See 3519 product page.

Model 2536 Ordering Notes

1) Other rotor and pin materials are available for purchase from the factory and can be easily replaced in the field. See Accessories section.

Please refer to Wiring, Installation, Accessories and Fittings sections for more information.

Accessories and Replacement Parts

Mfr. Part No.	Code	Description
Rotors		
3-2536.320-1	**198 820 052**	Rotor, PVDF Black
3-2536.320-2	**159 000 272**	Rotor, PVDF Natural
3-2536.320-3	**159 000 273**	Rotor, ETFE
3-2536.322-1	**198 820 056**	Sleeved rotor, PVDF Black
3-2536.322-2	**198 820 057**	Sleeved rotor, PVDF Natural
3-2536.322-3	**198 820 058**	Sleeved rotor, ETFE
Rotor Pins		
M1546-1	**198 801 182**	Pin, Titanium
M1546-2	**198 801 183**	Pin, Hastelloy-C
M1546-3	**198 820 014**	Pin, Tantalum
M1546-4	**198 820 015**	Pin, Stainless Steel
P51545	**198 820 016**	Pin, Ceramic
O-Rings		
1220-0021	**198 801 000**	O-ring, FKM (2 required per sensor)
1224-0021	**198 820 006**	O-ring, EPR (EPDM) (2 required per sensor)
1228-0021	**198 820 007**	O-ring, FFKM (2 required per sensor)
Miscellaneous		
P31536	**198 840 201**	Sensor plug, Polypropylene
P31542-3	**159 000 464**	Sensor cap, Blue
3-2536.555	**159 500 532**	Sensor cap, Gray
P31934	**159 000 466**	Conduit cap
P51589	**159 000 476**	Conduit Adapter Kit
5523-0222	**159 000 392**	Cable (per foot), 2 cond. w/shield, 22 AWG
3-2536.321	**198 820 054**	PVDF Natural, Rotor kit (rotor and pin)
3-8050	**159 000 184**	Universal Mount Kit
3-8050-1	**159 000 753**	Universal Junction Box
3-8050.390-1	**159 001 702**	Retaining nut replacement kit, NPT, Valox (for use with 8510 and 8512)
3-8050.390-3	**159 310 116**	Retaining nut replacement kit, NPT, PP (for use with 8510 and 8512)
3-8050.390-4	**159 310 117**	Retaining nut replacement kit, NPT, PVDF (for use with 8510 and 8512)
3-8051	**159 000 187**	Transmitter integral adapter (for use with 8510 and 8512)
3-8051-1	**159 001 755**	Transmitter integral mounting kit, NPT, PP (for use with 8510 and 8512)
3-8051-2	**159 001 756**	Transmitter integral mounting kit, NPT, PVDF (for use with 8510 and 8512)

Signet 515 Rotor-X Paddlewheel Flow Sensors

Standard Sensor (with red cap) | Integral Sensor | Wet-Tap Sensor

Simple to install with time-honored reliable performance, Signet 515 Rotor-X Paddlewheel Flow Sensors are highly repeatable, rugged sensors that offer exceptional value with little or no maintenance. The wide dynamic flow range of 0.3 to 6 m/s (1 to 20 ft/s) allows the sensor to measure liquid flow rates in full pipes and can be used in low pressure systems.

The Model 515 sensors are offered in a variety of materials for a wide range of pipe sizes and insertion configurations. The many material choices including PP and PVDF make this model highly versatile and chemically compatible to many liquid process solutions. Sensors can be installed in up to DN900 (36 in.) pipes using Signet's comprehensive line of custom fittings. These custom fittings, which include tees, saddles, and weldolets, seat the sensor to the proper insertion depth into the process flow. The sensors are also offered in configurations for wet-tap installation requirements.

Features

- **Operating range 0.3 to 6 m/s (1 to 20 ft/s)**
- **Wide turndown ratio of 20:1**
- **Highly repeatable output**
- **Simple, economical design**
- **Installs into pipe sizes DN15 to DN900 (½ to 36 in.)**
- **Self-powered/no external power required**
- **Test certificate included for -X0, -X1**
- **Chemically resistant materials**

Certified to NSF/ANSI 61 & 372

(P51530-PX version only)

Applications

- **Pure Water Production**
- **Filtration Systems**
- **Chemical Production**
- **Liquid Delivery Systems**
- **Pump Protection**
- **Scrubber Systems**
- **Water Monitoring**
- **Not suitable for gases**

Specifications

General			
Operating Range		0.3 to 6 m/s	1 to 20 ft/s
Pipe Size Range		DN15 to DN900	½ to 36 in.
Linearity		±1% of max. range @ 25 °C (77 °F)	
Repeatability		±0.5% of max. range @ 25 °C (77 °F)	
Min. Reynolds Number Required		4500	
Wetted Materials			
Sensor Body		Glass-filled PP (black) or PVDF (natural)	
O-rings		FKM (std), optional EPR (EPDM) or FFKM	
Rotor Pin		Titanium, Hastelloy-C or PVDF; optional Ceramic, Tantalum, or Stainless Steel	
Rotor		Black PVDF or Natural PVDF; optional ETFE, with or without carbon fiber reinforced PTFE sleeve	
Electrical			
Frequency		19.7 Hz per m/s nominal	6 Hz per ft/s sinusoidal
Amplitude		3.3 V p/p per m/s nominal	1 V p/p per ft/s
Source Impedance		8 KΩ	
Cable Type		2-conductor twisted pair with shield, 22 AWG	
Cable Length		7.6 m (25 ft) can be extended up to 60 m (200 ft) maximum	
Max. Temperature/Pressure Rating - Standard and Integral Sensor			
	PP	12.5 bar @ 20 °C	181 psi @ 68 °F
		1.7 bar @ 90 °C	25 psi @ 194 °F
	PVDF	14 bar @ 20 °C	203 psi @ 68 °F
		1.4 bar @ 100 °C	20 psi @ 212 °F
Operating Temperature			
	PP	-18 °C to 90 °C	0°F to 194 °F
	PVDF	-18 °C to 100 °C	0 °F to 212 °F
Max. Temperature/Pressure Rating - Wet-Tap Sensor			
	PP	7 bar @ 20 °C	102 psi @ 68 °F
		1.4 bar @ 66 °C	20 psi @ 150 °F
Operating Temperature			
		-18 °C to 66 °C	0 °F to 150 °F
Max. Wet-Tap Sensor Removal Rating			
		1.7 bar @ 22 °C	25 psi @ 72 °F
Shipping Weight			
	P51530-X0	0.454 kg	1.00 lb
	P51530-X1	0.476 kg	1.05 lb
	P51530-X2	0.680 kg	1.50 lb
	P51530-X3	0.780 kg	1.72 lb
	P51530-X4	0.800 kg	1.76 lb
	P51530-X5	0.880 kg	1.94 lb
	3-8510-X0	0.23 kg	0.50 lb
	3-8510-X1	0.23 kg	0.50 lb
Standards and Approvals			
		RoHS compliant, China RoHS, Made in USA from US and Imported Parts	
		Lloyd's Register Type Approval , NSF (P51530-PX version only)	
		Manufactured under ISO 9001 for Quality and ISO 14001 for Environmental Management and OHSAS 18001 for Occupational Health and Safety	

See Temperature and Pressure Graphs for more information

Dimensions

Standard Mount

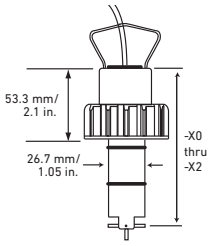

Pipe range	
0.5 to 4 in.	-X0 = 104 mm (4.1 in.)
5 to 8 in.	-X1 = 137 mm (5.4 in.)
10 in. and up	-X2 = 213 mm (8.4 in.)

Field (Integral) Mount
(shown with Transmitter sold separately)

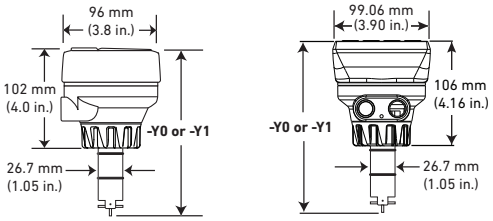

Pipe range	
0.5 to 4 in.	-Y0 = 152 mm (6.0 in.)
5 to 8 in.	-Y1 = 185 mm (7.3 in.)

Wet-Tap Mount Sensor with 3519 Wet-Tap Valve
(See 3519 product page for more information).

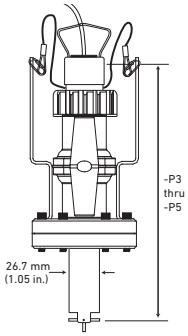

Pipe range	
0.5 to 4 in.	-P3 = 297 mm (11.7 in.)
5 to 8 in.	-P4 = 333 mm (13.1 in.)
10 in. and up	-P5 = 409 mm (16.1 in.)

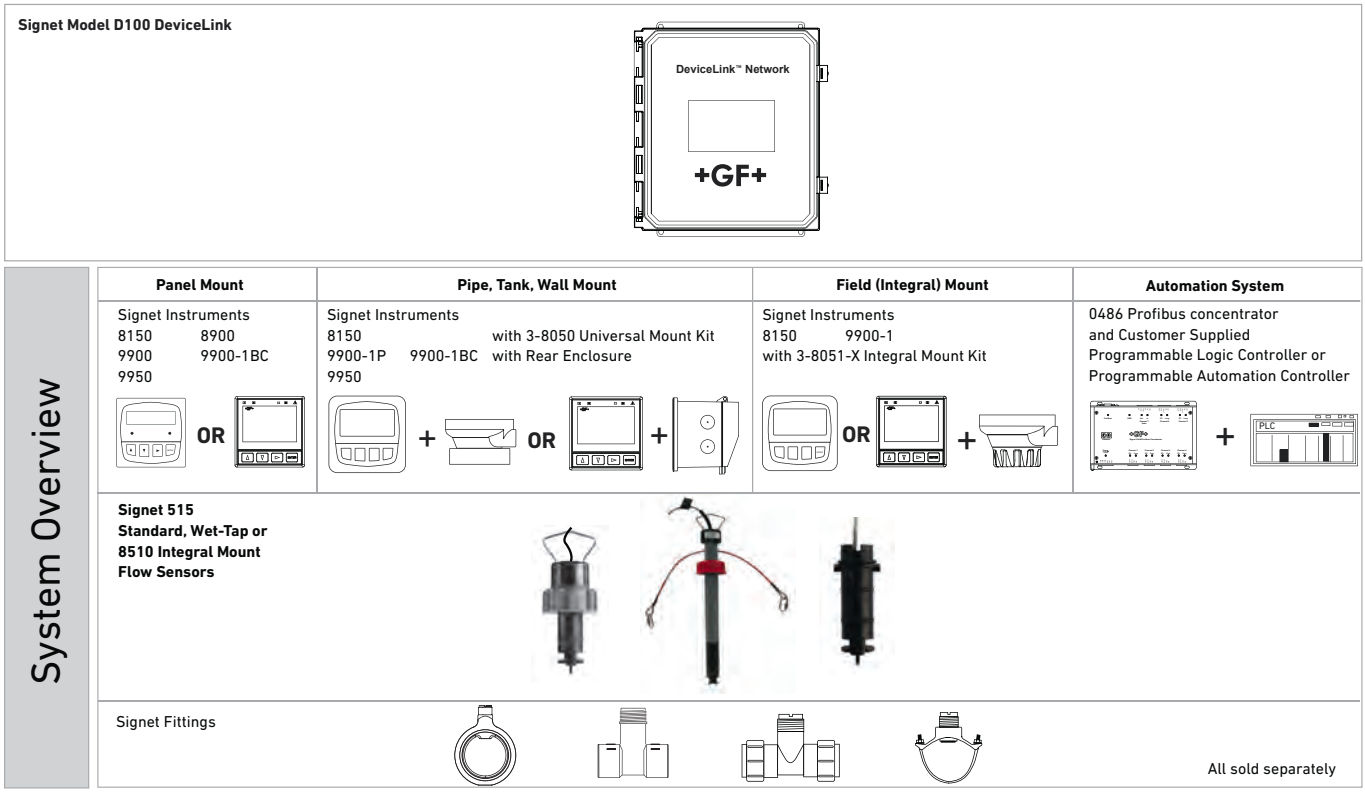

For overview of Wet-Tap System, see 3519 product page

Application Tips

- Use the Conduit Adapter Kit to protect the cable-to-sensor connection when used in outdoor environments. See Accessories section for more information.
- Use a sleeved rotor in abrasive liquids to reduce wear.
- Sensor plug can be used to plug installation fitting after extraction of sensor from pipe.
- For liquids containing ferrous particles, use Signet Magmeters.
- For systems with components of more than one material, the maximum temperature/pressure specification must always be referenced to the component with the lowest rating.

Temperature/Pressure Graphs

Note:
The pressure/temperature graphs are specifically for the Signet sensor. During system design the specifications of all components must be considered. In the case of a metal piping system, a plastic sensor will reduce the system specification. When using a PVDF sensor in a PVC piping system, the fitting will reduce the system specification.

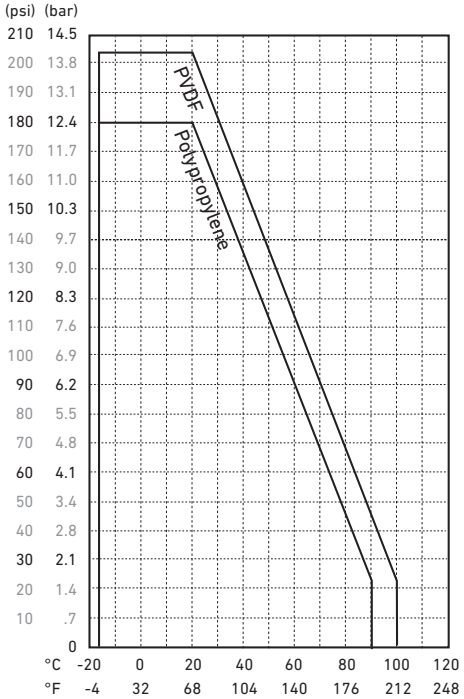

Ordering Notes

1) Most common part number combinations shown. For all other combinations contact factory.

2) Other rotor and pin materials are available for purchase from the factory and can be easily replaced in the field. See Accessories section.

Ordering Information

Model 515 Standard Mount Paddlewheel
When choosing this style of sensor, the instrument can be mounted nearby on a pipe or wall or in a remote location up to 61 m (200 ft) by connecting the sensor through a standard 3-8050-1 universal junction box. Standard cable length is 7.6 m (25 ft). Use Signet fittings for proper seating of the sensor into the process flow.

Mfr. Part No.	Code	Body	Rotor	Pin Material
Paddlewheel Flow Sensor for use with remote mount instrument				
Pipe size DN15 to DN100 - ½ to 4 in.				
P51530-H0	**198 801 659**	Polypropylene	Black PVDF	Hastelloy-C
P51530-P0	**198 801 620**	Polypropylene	Black PVDF	Titanium
P51530-S0	**198 801 661**	Polypropylene	Black PVDF	Natural PVDF
P51530-T0	**198 801 663**	Natural PVDF	Natural PVDF	Natural PVDF
P51530-V0	**198 801 623**	Natural PVDF	Natural PVDF	Hastelloy-C
Pipe size DN125 to DN200 - 5 to 8 in.				
P51530-P1	**198 801 621**	Polypropylene	Black PVDF	Titanium
P51530-T1	**198 801 664**	Natural PVDF	Natural PVDF	Natural PVDF
P51530-V1	**198 801 624**	Natural PVDF	Natural PVDF	Hastelloy-C
Pipe size DN250 - DN900 - 10 to 36 in.				
P51530-P2	**198 801 622**	Polypropylene	Black PVDF	Titanium
P51530-V2	**198 801 625**	Natural PVDF	Natural PVDF	Hastelloy-C

Ordering Information (continued)

Model 515 Integral Mount Paddlewheel
When choosing this style of sensor, the instrument is mounted directly onto the sensor for a local display. See guideline below for instructions.

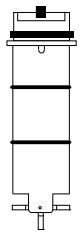

Mfr. Part No.	Code	Body	Rotor	Pin Material
Flow sensor for integral mounting on the 8150 or 9900 instrument using the 3-8051-X flow sensor integral mounting kit (sold separately)				
DN15 to DN100 - ½ to 4 in.				
3-8510-P0	**198 864 504**	Polypropylene	Black PVDF	Titanium
3-8510-T0	**159 000 622**	Natural PVDF	Natural PVDF	Natural PVDF**
3-8510-V0	**198 864 506**	Natural PVDF	Natural PVDF**	Hastelloy-C**
DN125 to DN200 - 5 to 8 in.				
3-8510-P1	**198 864 505**	Polypropylene	Black PVDF	Titanium

**PVDF available ½ in. to 4 in. only

Combining a 515 Integral mount flow sensor with an integrally mounted instrument

Once an integral mount sensor is chosen, it can be mounted directly to a field mount transmitter by following these guidelines:

a) Order the 3-8051-X flow sensor integral mounting kit (sold separately) to connect the sensor to an instrument.
b) Order a field mount transmitter (sold separately). The following part numbers are compatible: 3-8150-1, 3-9900-1.
c) Assembling the sensor with the integral adapter and instrument is quick and simple.

Model 515 Wet-Tap Mount Paddlewheel Flow Sensor
When choosing this style of sensor, the instrument can be mounted nearby on a pipe or wall or in a remote location up to 61 m (200 ft) by connecting the sensor through a standard 3-8050-1 universal junction box. Standard cable length is 7.6 m (25 ft). This style of sensor uses the 3519 Wet-Tap valve only (see individual product page for more information).

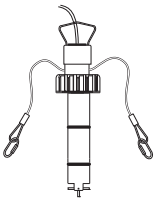

Mfr. Part No.	Code	Body	Rotor	Pin Material
Flow Sensor for wet-tap mounting with the 3519 Wet-Tap Valve (sold separately)				
DN15 to DN100 - ½ to 4 in.				
P51530-P3	**198 840 310**	Polypropylene	Black PVDF	Titanium
DN125 to DN200 - 5 to 8 in.				
P51530-P4	**198 840 311**	Polypropylene	Black PVDF	Titanium
DN250 to DN900 - 10 to 36 in.				
P51530-P5	**198 840 312**	Polypropylene	Black PVDF	Titanium

Combining a 515 Wet-Tap Sensor with a 3519 Wet-Tap Valve

a) Sensor can be mounted in a 3519 Wet-Tap Valve (sold separately)
b) Assembling a sensor with a 3519 Wet-Tap valve is quick and simple. These parts can also be ordered as complete assemblies. See 3519 product page.

Please refer to Wiring, Installation, Accessories and Fittings sections for more information.

Accessories and Replacement Parts

Mfr. Part No.	Code	Description
M1538-2	**198 801 181**	Rotor, PVDF Black
M1538-4	**198 820 018**	Rotor, ETFE
3-0515.322-1	**198 820 059**	Sleeved rotor, PVDF Black
3-0515.322-2	**198 820 060**	Sleeved rotor, PVDF Natural
3-0515.322-3	**198 820 017**	Sleeved rotor, ETFE
Rotor Pins		
M1546-1	**198 801 182**	Pin, Titanium
M1546-2	**198 801 183**	Pin, Hastelloy-C
M1546-3	**198 820 014**	Pin, Tantalum
M1546-4	**198 820 015**	Pin, Stainless Steel
P51545	**198 820 016**	Pin, Ceramic
O-rings		
1220-0021	**198 801 000**	O-ring, FKM (2 required per sensor)
1224-0021	**198 820 006**	O-ring, EPR (EPDM) (2 required per sensor)
1228-0021	**198 820 007**	O-ring, FFKM (2 required per sensor)
Miscellaneous		
P31536	**198 840 201**	Sensor plug, Polypropylene
P31542	**198 801 630**	Sensor cap, Red
P31934	**159 000 466**	Conduit cap
P51550-3	**198 820 043**	Rotor kit, PVDF Natural (rotor and pin)
P51589	**159 000 476**	Conduit adapter kit
5523-0222	**159 000 392**	Cable (per foot), 2 cond. w/shield, 22 AWG
3-8050	**159 000 184**	Universal Mounting Kit
3-8051-1	**159 001 755**	Transmitter integral mounting kit, NPT, PP (for use with 8510 and 8512)
3-8051-2	**159 001 756**	Transmitter integral mounting kit, NPT, PVDF (for use with 8510 and 8512)
3-8050.390-1	**159 001 702**	Retaining nut replacement kit, NPT, Valox (for use with 8510 and 8512)
3-8050.390-3	**159 310 116**	Retaining nut replacement kit, NPT, PP (for use with 8510 and 8512)
3-8050.390-4	**159 310 117**	Retaining nut replacement kit, NPT, PVDF (for use with 8510 and 8512)
3-8051	**159 000 187**	Transmitter integral mount kit (for use with 8510 and 8512)
3-8050-1	**159 000 753**	Universal mount junction box

Signet 2537 Paddlewheel Flowmeter

The Signet 2537 Flowmeter is the next generation in fluid measurement technology from the inventor of the original paddlewheel flowmeter. This sensor is an improvement on what's already an industry standard. It has the added functionality of various output options including flow switch, multi-functional pulse, digital (S^3L) or 4 to 20 mA. Additionally, it offers low flow, low power and high resolution and can be configured on-site directly through the built-in user interface.

Installation is simple because the Signet 2537 utilizes the same fittings as the popular Signet 515 and 2536 Paddlewheel Sensors and fits into pipe sizes ranging from DN15 to DN200 (½ to 8 inches). Available in Polypropylene and PVDF, it is ideal for a variety of applications including chemical processing, water and wastewater monitoring and scrubber control.

Features

- **Digital (S^3L) or 4 to 20 mA outputs or (Multi-function)**
- **Allows for up to six sensors to Signet 8900 Controller**
- **Low flow capabilities down to 0.1 m/s (0.3 ft/s)**
- **Polypropylene or PVDF sensor bodies**
- **Polypropylene and PVDF retaining nuts standard, Valox optional**
- **Installs into pipe sizes DN15 to DN200 (½ to 8 in.)**
- **Test certificate included for -X0, -X1**
- **Low power and high resolution**

(3-2537-XC-PX version only)

Applications

- **Process Flow Monitoring**
- **Pump Protection**
- **Pure Water Production**
- **Filtration Systems**
- **Chemical Production**
- **Reverse Osmosis**
- **Demineralization/Regeneration**
- **Fume Scrubbers**
- **Cooling Towers**
- **Proportional Metering Pump**

Specifications

General			
Operating Range		0.1 m/s to 6 m/s	0.3 ft/s to 20 ft/s
Pipe Size Range		DN15 to DN200	½ to 8 in.
Linearity		±1% of max. range @ 25 °C (77 °F)	
Repeatability		±0.5% of max. range @ 25 °C (77 °F)	
System Response		100 ms update rate nominal	
Wetted Materials			
Sensor Body	Glass-filled PP (black) or PVDF (natural)		
O-rings	FKM (std) optional EPR (EPDM) or FFKM		
Rotor Pin	Titanium, Hastelloy-C or PVDF; optional Ceramic, Tantalum or Stainless Steel		
Rotor	Black PVDF or Natural PVDF; optional ETFE, with or w/o carbon fiber reinforced PTFE sleeve for rotor pin		
Electrical			
Multi	With Dry-Contact Relay	24 VDC nominal, ±10%, regulated, 30 mA max current	
	With Solid-State Relay	6 V to 24 VDC, ±10%, regulated, 30 mA max current	
	Digital (S^3L)	5.0 VDC min to 6.5 VDC max., 30 mA max current (1.5 mA nominal)	
	4 to 20 mA	400 mV max ripple voltage, 30 mA max current	
	Maximum Pulse Rate	300 Hz	
	Maximum Pulse Width	50 ms	
	Minimum Pulse Rate	0.5 Hz	
	Compatible with PLC, PC or similar equipment		
	Compatible with customer supplied metering pump		
Digital (S^3L) Version		5 VDC nominal, regulated, 3 mA max current	
	Type	Serial ASCII, TTL level 9600 bps	
	Max. Cable Length	Refer to Signet 8900 wiring specifications.	
	Compatible with Model Signet 8900, 9900 and 9950		
4 to 20 mA Version		12 to 32 VDC nominal, ±10%, regulated, 21 mA max current	
	Loop Accuracy	±32 µA @ 25 °C @ 24 VDC)	
	Loop Resolution	5 µA	
	Temp. Drift	±1µA per °C max.	
	Power Supply Rejection	±1µA per V	
	Max. Cable	305 m	1000 ft
	Maximum Loop Resistance	600 Ω @ 24 VDC	1 KΩ @ 32 VDC
	Load Impedance	375 Ω	
Reverse Polarity and Short Circuit Protected		Up to 40 V, 1 hour	
Over-voltage Protection		> 40 VDC over 1 hour	
Relay Specifications			
	Mechanical SPDT	5 A @ 30 VDC, 5 A @ 250 VAC	
	Solid-State Relay	100 mA @ 40 VDC, 70 mA @ 33 VAC	
	Relay Modes	Low, High	
	Time Delay	0.0 to 6400.0 seconds	
	Hysteresis	Adjustable for exiting alarm condition	
Max. Temperature/Pressure Rating			
Storage Temperature		-10 °C to 75 °C	14 °F to 167 °F
Operating Temperature		0 °C to 65 °C	32 °F to 149 °F
Relative Humidity		0 to 90%, non-condensing	
Flow Sensor/ Retaining Nut	PP	12.5 bar @ 20 °C	181 psi @ 68 °F
		1.7 bar @ 85 °C	25 psi @185 °F
	PVDF	14 bar @ 20 °C	203 psi @ 68 °F
		1.7 bar @ 85 °C	25 psi @ 185 °F
Operating Temperature			
	PP	-18 °C to 85 °C	0 °F to 185 °F
	PVDF	-18 °C to 85 °C	0 °F to 185 °F
Environmental			
Enclosure	NEMA 4X/IP65		
Shipping Weight			
	0.640 kg	1.41 lb	
Standards and Approvals			
	CE, FCC, UL, NSF (3-2537-XC-PX version only)		
	RoHS compliant, China RoHS, Made in USA from US and Imported Parts		
	Manufactured under ISO 9001 for Quality and ISO 14001 for Environmental Management and OHSAS 18001 for Occupational Health and Safety.		

Dimensions

½ in. to 4 in. pipe

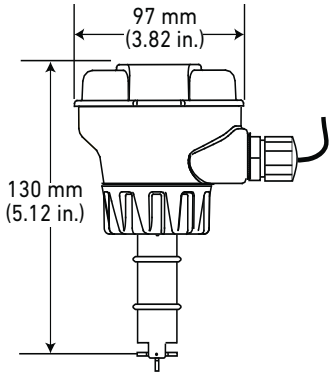

5 to 8 in. pipe

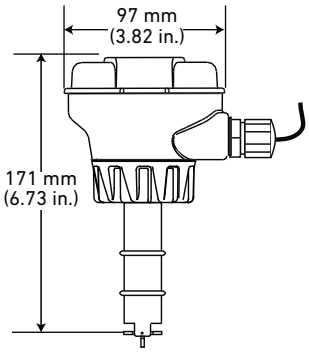

Signet Model D100 DeviceLink

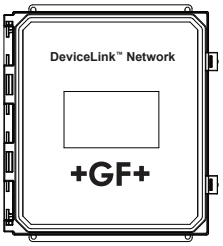

System Overview

Panel Mount	4 to 20 mA Dry Contact, Solid State	4 to 20 Output	Automation System
Signet Instruments 8900 9900 9900-1BC 9950  OR 	Customer Supplied Metering Pump 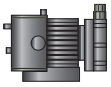	Customer Supplied Chart Recorder, Programmable Logic Controller , or Programmable Automation Controller  OR 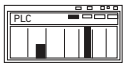	0486 Profibus Concentrator and Customer Supplied Programmable Logic Controller or Programmable Automation Controller 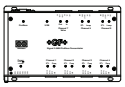 + 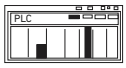

Signet 2537 Paddlewheel Flowmeter

Signet Fittings

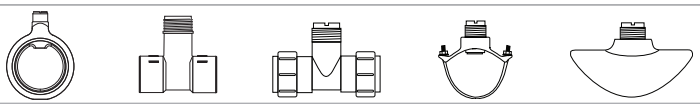

All sold separately

Application Tips

- Select PVDF Rotor Pin for use in Deionized Water.
- Use a sleeved rotor in abrasive liquids to reduce wear.
- Sensor plug is used to plug installation fitting after extraction of sensor from pipe.
- For liquids containing ferrous particles, use Signet Magmeters.
- For systems with components of more than one material, the maximum temperature/pressure specification must always be referenced to the component with the lowest rating.

Please refer to Wiring, Installation, and Accessories sections for more information.

Ordering Information

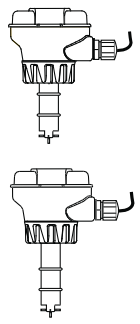

Mfr. Part No.	Code	Output
Paddlewheel Flowmeter - Integral Mount (8512 sensors)		
DN15 to DN100 - ½ to 4 in.		
Polypropylene body, black Polypropylene retaining nut, black PVDF rotor, Titanium pin, FKM O-rings		
3-2537-1C-P0	**159 001 291**	Pulse/Flow Switch DCR
3-2537-2C-P0	**159 001 292**	Pulse/Flow Switch SSR
3-2537-5C-P0	**159 001 295**	Digital (S^3L)
3-2537-6C-P0	**159 001 296**	4 to 20 mA
Natural PVDF body, natural PVDF retaining nut, rotor and pin, FKM O-rings		
3-2537-1C-T0	**159 001 315**	Pulse/Flow Switch DCR
3-2537-2C-T0	**159 001 316**	Pulse/Flow Switch SSR
3-2537-5C-T0	**159 001 319**	Digital (S^3L)
3-2537-6C-T0	**159 001 320**	4 to 20 mA
DN125 to DN200 - 5 to 8 in.*		
Polypropylene body, black Polypropylene retaining nut, black PVDF rotor, Titanium pin, FKM O-rings		
3-2537-1C-P1	**159 001 303**	Pulse/Flow Switch DCR
3-2537-2C-P1	**159 001 304**	Pulse/Flow Switch SSR
3-2537-5C-P1	**159 001 307**	Digital (S^3L)
3-2537-6C-P1	**159 001 308**	4 to 20 mA

*PVDF available ½ in. to 4 in. only

Accessories and Replacement Parts

Mfr. Part No.	Code	Description
Rotors		
3-2536.320-1	**198 820 052**	Rotor, PVDF Black
3-2536.320-2	**159 000 272**	Rotor, PVDF Natural
3-2536.320-3	**159 000 273**	Rotor, ETFE
3-2536.322-1	**198 820 056**	Sleeved rotor, PVDF Black
3-2536.322-2	**198 820 057**	Sleeved rotor, PVDF Natural
3-2536.322-3	**198 820 058**	Sleeved rotor, ETFE
Rotor Pins		
M1546-1	**198 801 182**	Pin, Titanium
M1546-2	**198 801 183**	Pin, Hastelloy-C
M1546-3	**198 820 014**	Pin, Tantalum
M1546-4	**198 820 015**	Pin, Stainless Steel
P51545	**198 820 016**	Pin, Ceramic
O-rings		
1220-0021	**198 801 000**	O-ring, FKM (2 required per sensor)
1224-0021	**198 820 006**	O-ring, EPR (EPDM) (2 required per sensor)
1228-0021	**198 820 007**	O-ring, FFKM (2 required per sensor)
1223-0151	**159 000 236**	O-ring EPR (EPDM) -151 .103W 2.987ID
Miscellaneous		
P31536	**198 840 201**	Sensor plug, Polypropylene
3-2536.321	**198 820 054**	PVDF Natural, Rotor kit (rotor and pin)
3-8050.390-1	**159 001 702**	Retaining Nut Replacement Kit, NPT, Valox
3-8050.390-3	**159 310 116**	Retaining Nut Replacement Kit, NPT, PP
3-8050.390-4	**159 310 117**	Retaining Nut Replacement Kit, NPT, PVDF
3-8050.396	**159 000 617**	RC Filter Kit (for relay use) with inductive loads
3-9000.392-1	**159 000 839**	Liquid Tight Connector Kit, NPT (1 piece)
3-9000.392-2	**159 000 841**	Liquid Tight Connector Kit, PG13.5 (1 piece)
7310-1024	**159 873 004**	24 VDC Power Supply, 10W, 0.42 A
7310-2024	**159 873 005**	24 VDC Power Supply, 24W, 1.0 A
7310-4024	**159 873 006**	24 VDC Power Supply, 40W, 1.7 A
7310-6024	**159 873 007**	24 VDC Power Supply, 60W, 2.5 A
7310-7024	**159 873 008**	24 VDC Power Supply, 96W, 4.0 A

Signet 2540 Stainless Steel High Performance Paddlewheel Flow Sensor

Standard Sensor

Hot-Tap Sensor

The Signet 2540 Paddlewheel Flow Sensor offers the strength and corrosion resistance of stainless steel for liquid applications with low velocity measurements. Unique internal circuitry eliminates the need for magnets in the process fluid, enabling flow measurement of 0.1 to 6 m/s (0.3 to 20 ft/s) while maintaining the advantages of insertion sensor design. Ultraflon 500C bearings and Tungsten Carbide pin provide exceptional wear resistance.

The Signet 2540 offers field replaceable electronics and transient voltage suppression (TVS) to provide greater immunity to large voltage disturbances (i.e. lightning) sometimes encountered in field wiring. Sensors can be installed in DN40 to DN600 (1½ to 24 inch) pipes using the 1½ inch or ISO 7/1-R 1.5 threaded process connection.

The sensors are also offered in a hot-tap configuration with a bleed valve service without process shutdown in pipes up to DN900 (36 in.). Both styles of sensors must be used in full pipes and can be used in low pressure systems.

Features

- **Operating range 0.1 to 6 m/s (0.3 to 20 ft/s)**
- **Field replaceable electronics**
- **Non-magnetic RF detection**
- **Standard NPT or ISO process connections (external fittings such as Saddles and Weldolets)**
- **Hot-tap versions for installation/service without system shutdown**
- **For pipe sizes up to DN900 (36 in.)**
- **Adjustable sensor - one size for entire pipe range**
- **7.6 m (25 ft) cable**

Applications

- **HVAC**
- **Turf Irrigation**
- **Cooling Systems**
- **Filtration Systems**
- **Water Distribution**
- **Leak Detection**
- **Pump Protection**
- **Clarified Effluent Totalization**
- **Ground Water Remediation**
- **Gravity Feed Line (full pipe)**

Specifications

General			
Operating Range	0.1 to 6 m/s	0.3 to 20 ft/s	
Pipe Size Range	Standard Version	DN40 to DN600	1½ to 24 in.
	Hot-Tap Version	DN40 to DN900	1½ to 36 in.
Sensor Fitting Options	1½ in. NPT threads	ISO 7/1-R 1.5 threads	
Linearity	±1% of full range		
Repeatability	±0.5% of full range		
Min. Reynolds Number Required	4500		
Wetted Materials			
Body	316 stainless steel (1.4401)		
Fitting	316 stainless steel (1.4401)		
Fitting O-rings	FKM, optional EPR (EPDM)		
Rotor	17-4PH-1 Stainless Steel		
Rotor Pin	Tungsten Carbide GRP 1 (standard) stainless steel (optional)		
Retainers (2)	316 stainless steel (1.4401)		
Rotor Bearings (2)	Carbon fiber reinforced PTFE		
Electrical			
Frequency	49 Hz per m/s nominal	15 Hz per ft/s nominal	
Power	5 to 24 VDC ±10%, regulated, 1.5 mA max.		
Output Type	Open collector, sinking, max 10.0 mA		
Cable Length	7.6 m (25 ft), can be extended up to 305 m (1,000 ft)		
Cable Type	2-conductor twisted-pair with shield, 22 AWG		
Max. Temperature/Pressure Rating			
Sensor with standard FKM sensor fitting O-rings	17 bar @ 82 °C	250 psi @ 180 °F	
Sensor with optional EPR (EPDM) sensor fitting O-rings	17 bar @ 100 °C	250 psi @ 212 °F	
Operating Temperature	-18 °C to 100 °C	0 °F to 212 °F	
Shipping Weight			
	3-2540-1/-2/-1S/-2S	1.79 kg	3.9 lb
	3-2540-3/-4/-3S/-4S	2.15 kg	4.7 lb
Standards and Approvals			
	CE, FCC		
	RoHS compliant, China RoHS, Made in USA from US and Imported Parts		
	Manufactured under ISO 9001 for Quality and ISO 14001 for Environmental Management and OHSAS 18001 for Occupational Health and Safety		

Dimensions

2540 High Performance Flow Sensor for 1½ to 24 in. pipes (external fittings such as Saddles and Weldolets)

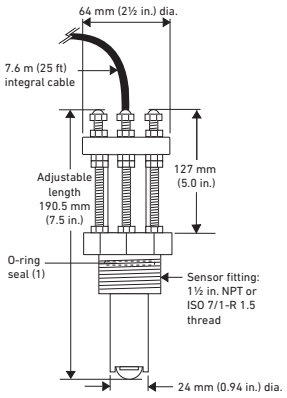

2540 Hot-Tap for 1½ to 36 in. pipes (external fittings such as Saddles and Weldolets)

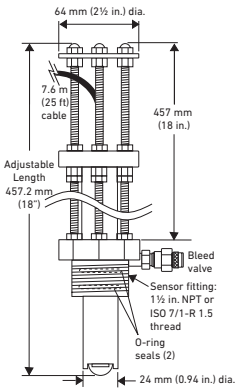

See Temperature and Pressure graphs for more information.

Signet Model D100 DeviceLink

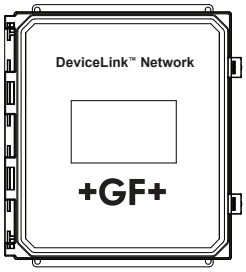

System Overview

Panel Mount	Pipe, Tank, Wall Mount	Automation System
Signet Instruments 8900 9900 9900-1BC 9950	Signet Instruments 9900-1P 9900-1BC with Rear Enclosure	0486 Profibus Concentrator and Customer Supplied Programmable Logic Controller or Programmable Automation Controller

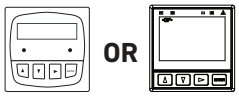

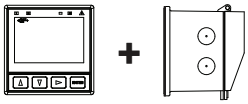

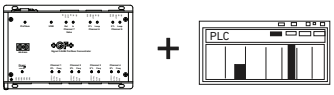

Signet 2540 Standard or Hot-tap (not shown) Flow Sensor

All sold separately

Fittings -
Customer supplied

Application Tips

- For systems with components of more than one material, the maximum temperature/pressure specification must always be referenced to the component with the lowest rating.
- Use the Conduit Adapter Kit to protect the cable-to-sensor connection when used in outdoor environments.
- Sensor electronics can be easily replaced by 3-2541.260-1 or 3-2541.260-2.

Temperature/Pressure Graphs

Note:
The pressure/temperature graphs are specifically for the Signet sensor. During system design the specifications of all components must be considered.

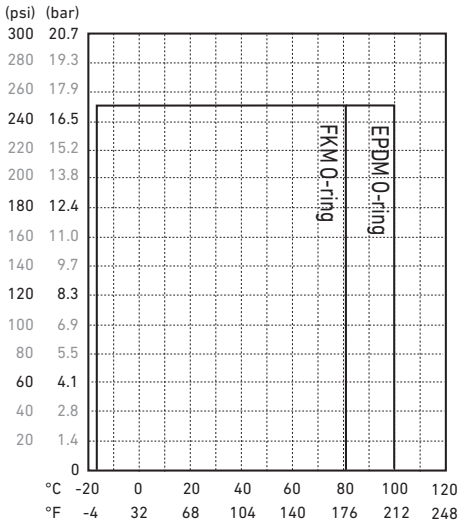

Please refer to Wiring, Installation, and Accessories sections for more information.

Ordering Information

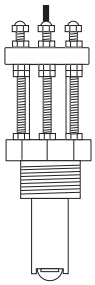

Mfr. Part No.	Code	Mounting Option	Rotor Pin Material
Stainless Steel High Performance flow sensor with removable electronics			
3-2540-1	**198 840 035**	1½ inch NPT thread	Tungsten Carbide
3-2540-2	**198 840 036**	1½ inch ISO thread	Tungsten Carbide
3-2540-3	**198 840 037**	1½ inch NPT thread, Hot-Tap design*	Tungsten Carbide
3-2540-4	**198 840 038**	1½ inch ISO thread, Hot-Tap design*	Tungsten Carbide
3-2540-1S	**159 001 501**	1½ inch NPT thread	316 Stainless Steel
3-2540-2S	**159 001 502**	1½ inch ISO thread	316 Stainless Steel
3-2540-3S	**159 001 503**	1½ inch NPT thread, Hot-Tap design*	316 Stainless Steel
3-2540-4S	**159 001 504**	1½ inch ISO thread, Hot-Tap design*	316 Stainless Steel

*Must use 3-1500.663 Hot-Tap installation tool (ordered separately)

Ordering Notes
Installation fittings and Hot-Tap valves are customer supplied.

Accessories and Replacement Parts

Mfr. Part No.	Code	Description
3-1500.663	**198 820 008**	Hot-Tap Installation Tool (see Installation for more info)
1220-0021	**198 801 000**	O-ring, FKM (2 required per sensor)
1224-0021	**198 820 006**	O-ring, EPR (EPDM) (2 required per sensor)
1228-0021	**198 820 007**	O-ring, FFKM (2 required per sensor)
3-2540.320	**198 820 040**	Rotor kit, 2540 PEEK® Bearing (old version)
3-2540.321	**159 000 623**	Rotor kit, 2540 Tungsten Carbide Pin (new version since January 1, 2000)
3-2540.322	**159 000 864**	Rotor kit, Stainless Steel pin and rotor
P52504-3	**159 000 866**	Rotor pin, Tungsten Carbide
P52504-4	**159 000 867**	Rotor pin, 316 SS
P52503	**198 820 013**	Bearing, carbon reinforced PTFE
P52527	**159 000 481**	Retainers, SS (1.4401)
3-2541.260-1	**159 000 849**	Standard replacement electronics module
3-2541.260-2	**159 000 850**	Hot-Tap replacement electronics module
5523-0222	**159 000 392**	Cable (per foot), 2 cond. w/shield, 22 AWG
P51589	**159 000 476**	Conduit adapter kit
P31934	**159 000 466**	Conduit cap

Signet 525 Metalex Paddlewheel Flow Sensor

The Signet 525 Metalex Paddlewheel Flow Sensor combines stainless steel construction with insertion paddlewheel technology. The result is a highly reliable sensor suitable for operation at extreme pressures and temperatures. The Tungsten Carbide shaft and carbon fiber reinforced PTFE bearing provides excellent wear resistance for extended service.

A comprehensive fitting program allows installation in steel lines with the mini-block for small diameters, and either the mini-tap or saddle for pipes up to DN300 (12 in.). The self-generating output signal allows use with the battery operated flow totalizer 8150.

Features

- **For up to 103 bar (1500 psi @ safety factor 1.5) pressure**
- **For up to 149 °C (300 °F) temperature**
- **DN15 to DN300 (½ to 12 in.) pipe range**
- **Simple installation**
- **Self-powered/no external power required**
- **316 SS body**
- **Tungsten Carbide or SS shaft**
- **7.6 m (25 ft) cable included**
- **Operating range 0.5 to 6 m/s (1.6 to 20 ft/s)**

Applications

- **Boiler Feedwater Monitoring**
- **HVAC**
- **Chemical Transport**
- **Heat Exchangers**
- **Reverse Osmosis**
- **Cooling Systems**
- **Not suitable for gases**

Specifications

General			
Operating Range		0.5 to 6 m/s	1.6 to 20 ft/s
Pipe Size Range		DN15 to DN300	½ to 12 in.
Linearity		±1% of max. range @ 25 °C (77 °F)	
Repeatability		±0.5% of max. range @ 25 °C (77 °F)	
Min. Reynolds Number Required		4500	
Wetted Materials			
Sensor Body		316 SS (ACI type CF-8M per ASTM A351), DIN 17440	
Rotor Material		17-4PH-1 Stainless Steel	
Rotor Pin		Tungsten Carbide GRP 1 or 316 stainless steel	
Retainers (2)		316 stainless steel (1.4401	
Rotor Bearings (2)		Carbon fiber reinforced PTFE	
Gasket		KLINGER®sil C-4401 (supplied with fitting)	
Electrical			
Frequency		39 Hz per m/s nominal	12 Hz per ft/s nominal
Amplitude		5 to 8 mV p-p per Hz	
Source Impedance		11.6 KΩ	
Cable Length		7.6 m (25 ft), can be extended up to 61 m (200 ft)	
Cable Type		Cable (per foot) 2 cond. w/shield, 22 AWG	
Max. Temperature/Pressure Rating			
Socket Weld or Weld-On Mini-Tap Fittings		103 bar (1500 psi @ safety factor 1.5) @ 149 °C (300 °F)	
Strap-on Saddle Fitting		21 bar (305 psi) @ 66 °C (151 °F)	
Operating Temperature		-18 °C to 149 °C	0 °F to 300 °F
Shipping Weight			
	P525-1/-1S	0.723 kg	1.6 lb
	P525-2/-2S	0.774 kg	1.7 lb
Standards and Approvals			
	RoHS compliant, China RoHS, Made in USA from US and Imported Parts		
	Manufactured under ISO 9001 for Quality and ISO 14001 for Environmental Management and OHSAS 18001 for Occupational Health and Safety		

See Temperature and Pressure graphs for more information.

Dimensions

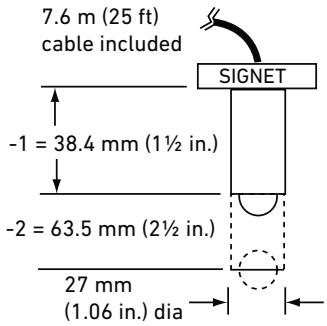

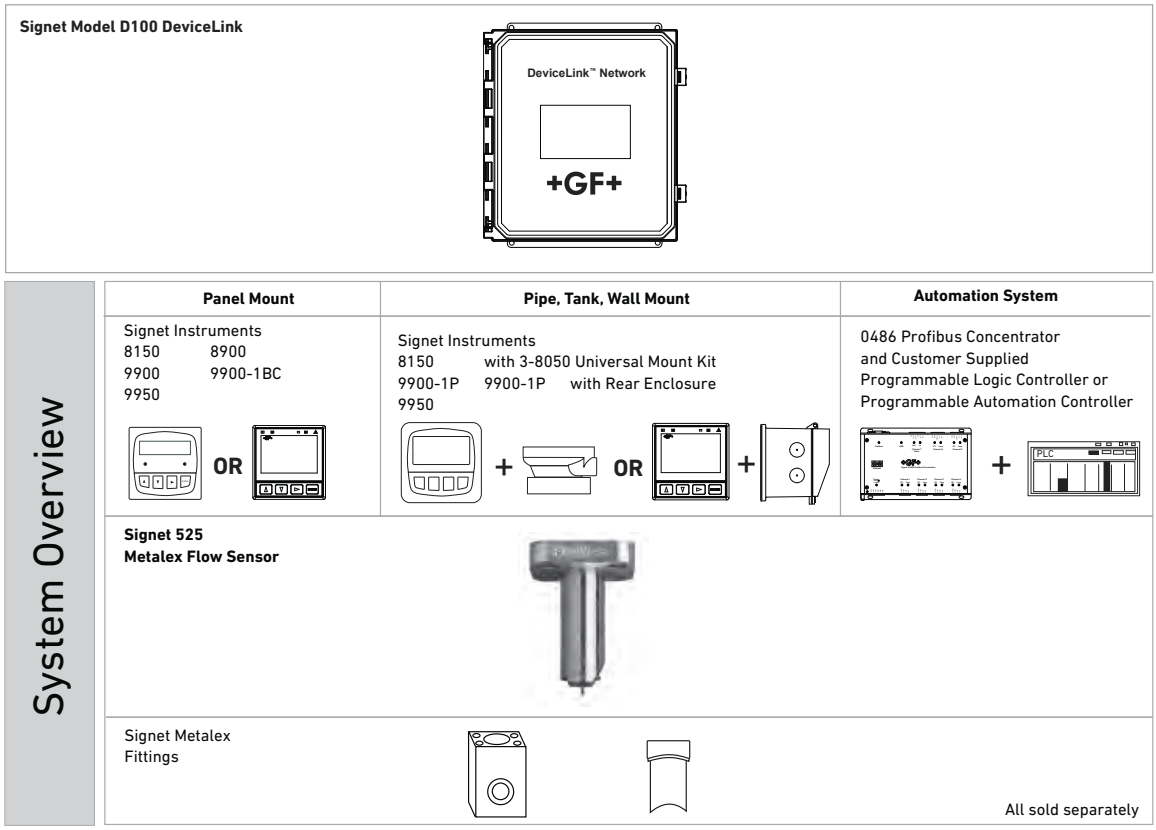

Application Tips

- Use the Conduit Adapter Kit to protect the cable-to-sensor connection when used in outdoor environments. See Accessories section.
- Use the Socket Weld or Weld-on Mini-Tap fittings for sensor installation in pressures up to 1500 psi (103 bar).

Model 525 Ordering Notes

1) Each sensor option is used with a different fitting based on pipe size.
2) Fittings must be ordered separately.
3) See fittings section for more information.

Temperature/Pressure Graphs

Note:
The pressure/temperature graphs are specifically for the Signet sensor. During system design the specifications of all components must be considered.

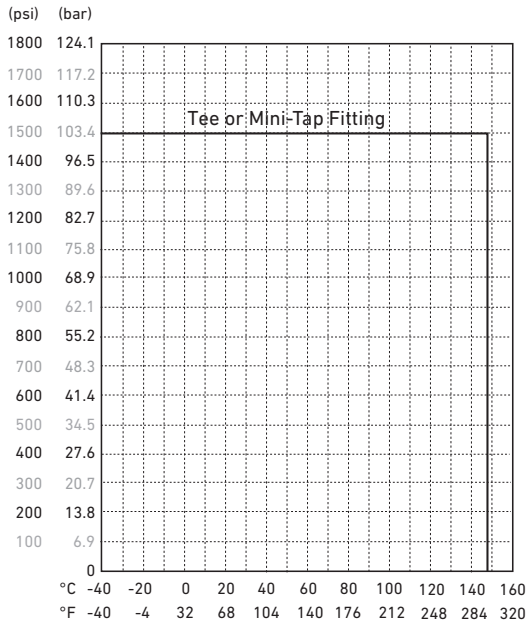

Please refer to Wiring, Installation, and Accessories sections for more information.

Ordering Information

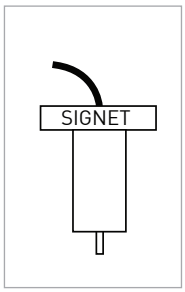

Mfr. Part No.	Code	Sensor Style	Rotor Pin Material
Metalex Flow sensor for high pressures and temperatures			
P525-1	**198 801 494**	used with ½ to 1 inch socket-weld mini-tap fittings**	Tungsten Carbide
P525-2	**198 801 495**	used with 1¼ to 12 inch weld-on mini-tap fittings**	Tungsten Carbide
P525-1S	**159 000 963**	used with ½ to 1 inch socket-weld mini-tap fittings**	316 Stainless Steel
P525-2S	**159 000 964**	used with 1¼ to 12 inch weld-on mini-tap fittings**	316 Stainless Steel

**See Fittings section

Accessories and Replacement Parts

Mfr. Part No.	Code	Description
P52509	**198 801 501**	Rotor kit (rotors, stainless steel pin, bearings, retainers)
P52509-2	**159 000 480**	Rotor kit (rotors, tungsten carbide pin, bearings, retainers)
P52504-1	**198 801 500**	Rotor pin, Stainless Steel (1.4401)
P52504-2	**198 820 023**	Rotor pin, Tungsten Carbide
P52618	**159 000 493**	Gasket (included with fitting)
P52503	**198 820 013**	Bearing, carbon fiber reinforced PTFE
P52527	**159 000 481**	Retainers, Stainless Steel
P52628	**159 000 504**	Fitting cap kit (cap and gasket)
P51589	**159 000 476**	Conduit adapter kit
5523-3222	**159 000 393**	Cable (per foot) 2 cond. w/shield, 22 AWG

Portaflow 220/330 Portable Ultrasonic Flowmeter

The Portaflow range brings simplicity to the non-invasive measurement of liquid flow. Portaflow offers the user quick and accurate flow measurement with its easy to follow menu and simple set up. Results can be achieved within minutes of opening the case. Compact, rugged and reliable, the Portaflow range has been designed to provide sustained performance in industrial environments.

Features

- **Large, easy to read graphic display with backlighting**
- **Easy to install thanks to flexible guide rails**
- **Rechargeable battery for up to 20 hours mobile operation**
- **Simple to follow dual function keypad**
- **Simple 'Quick Start' set up procedure**
- **Data logger for 198k data points (Type PF330)**
- **Analog and pulse outputs**

CE

Applications

- **Potable Water**
- **River Water**
- **Cooling Water**
- **Demineralized Water**
- **Water/Glycol Solutions**
- **Chemicals**
  - **Leak Detection**
  - **Boiler Testing**

General			
DSP Measurement Technique		Transit time	
Flow Velocity Range		0.1 m/s - 20 m/s	
Accuracy		Pipe ID >75 mm	±0.5% to ±2% of flow reading for flow rate >0.2 m/s
		Pipe ID 13 mm - 75 mm	±3% of flow reading for flow rate >0.2 m/s
		All pipe ID's	±6% of flow reading for flow rate <0.2 m/s
Repeatability		±0.5% of measured value or ±0.02 m/s whichever is the greater	
Response Time		< 500 ms depending on pipe diameter	
Selectable Flow Units		Velocity	m/sec, ft/sec.
		Volume	"l/s, l/min, l/h, gal/min, gal/h, USgals/min, USgals/h, Barrel/h, Barrel/day, m^3/s, m^3/min, m^3/h"
Selectable Total Volume Units		l, gal, USgals, Barrel, m^3	
Total Volume		12 digits	
Menu Languages		EN, DE, FR, RU, SWE, IT, SP, P, NO, DEN	
Environmental			
Operating Temperature		-20 °C to 50 °C	-4 °F to 122 °F
Storage Temperature		-25 °C to 65 °C	-13 °F to 149 °F
Pipe Wall Temperature		-20 °C to 135 °C	-4 °F to 275 °F
Operating Humidity		Max. 90% relative humidity @ 50°C (122 °F)	
Applicable Pipe Types			
Pipe Materials		PVDF-SYGEF, PP-PROGEF, PE-ELGEF, PB-INSTAFLEX, ABS, PVC-U/PVC-C, Mild Steel, Ductile Iron, Stainless Steel 316, Copper	
Pipe Dimension (OD)	Type PF220	13 mm to 1000 mm	0.5 in. to 39 in.
	Type PF330	13 mm to 2000 mm	0.5 in. to 78 in.
Pipe Wall Thickness		1 mm to 75 mm	0.04 in. to 3 in.
Pipe Lining		Applicable pipe linings include Rubber, Glass, Concrete, Epoxy, Steel	
Pipe Lining Thickness		0 mm to 10 mm	0 in. to 0.4 in.
Electrical			
Supply Voltage		9 to 24 V DC	
Power Consumption		Max. 10.5 W	
Battery			
	Technology	5-cell NiMH	
	Capacity	3.8 Ah	
	Operating Time (typical)	Typically 20 hours continuous with backlight and 4-20mA output OFF	
	Recharge Time	6.5 h	
	Service Life	>500 charge/discharge cycles	
Power supply			
Input Voltage		90 to 264 V AC (47 to 63 Hz)	
Output Voltage		12 V DC	
Output Current Max.		1.5 A	
Approvals		UL, CUL, TUV, CB, CE	
Outputs			
Analog Output	Range	4 to 20 mA, 0 to 20 mA, 0 to 16 mA	
	Resolution	0.1% of full scale	
	Load Max.	620 Ω	
	Isolation	1500 V Opto-isolated	
	Alarm Current	Adjustable between 0 to 26mA	
Pulse Output	Type	Digital MOSFET relay	
	Pulse Repetition	Max. 500 pps, user programmable	
	Pulse Width	5 - 500 ms, user programmable	
	Voltage Max.	48 V	
	Current Max.	500 mA	
	Isolation	1500 V opto isolated	
USB Interface (PF330 only)	Protocol	Supports full speed (12Mbits/sec) data connection	
	Software	USB driver software is provided with the package	
	Connector	Proprietary industrial connector	
RS-232 Interface (PF330 only)	Protocol	Serial RS-232 communication including handshaking	
	Connector	Proprietary industrial connector (GND, RxD, TxD, DTR, DSR)	

Specifications (continued)

Data Logger (PF330 only)				
Data Logged		Log application details, flow rate, total flow, unit, time stamp		
Number of Data Points		198 k		
Number of Data Sites		20		
Number of Data Points per Site		No limit (max. 198k)		
Programmable Logging Interval		5 s - 1 h		
Start / Stop		Manually or timer controlled		
Data Download		Via RS-232 / USB interface		
Transducer Sets				
Type A		Type PF220 & PF330	13 mm - 114 mm (0.51 in - 4.49 in) pipe O.D. (2MHz)	
Type B		Type PF220	50 mm - 1000 mm (1.97 in - 39.37 in) pipe O.D. (1MHz)	
		Type PF330	115 mm - 2000 mm (4.53 in - 78.74 in) pipe O.D. (1MHz)	
Enclosure and Display				
Material		ABS		
Dimensions		264 x 168 x 50 mm	10.4 x 6.6 x 2.0 inch	
Weight		1.1 kg (incl. battery)	2.45 lb	
Keypad		16 key tactile feedback membrane keypad		
Display	Type	240 x 64 pixel graphic display, high contrast black-on-white, with backlight		
	Viewing angle	Min. 30°, typically 40°		
	Active area	127 x 34 mm	5 x 1.3 inch	
IP Rating		IP 54		
Shipping Weight				
	PF330		PF220	
Box dimensions	420 x 390 x 220 mm	16.5 x 15.4 x 8.7 inch	510 x 140 x 440 mm	20 x 5.5 x 17.3 inch
Weight	7.5 kg	16.5 lb	6 kg	13.2 lb
Volumetric Weight	5.7 kg	12.5 lb	5.2 kg	11.5 lb
Standards and Approvals				
	CE, RoHS compliant, Imported from Europe			
	Safety	BS EN 61010		
	EMC	BS EN 61326 - 1:2006	BS EN 61326-2-3:2006	
	Power Supply	EN61204 - 3	UL, CUL, TUV, CB, CE	

Dimensions

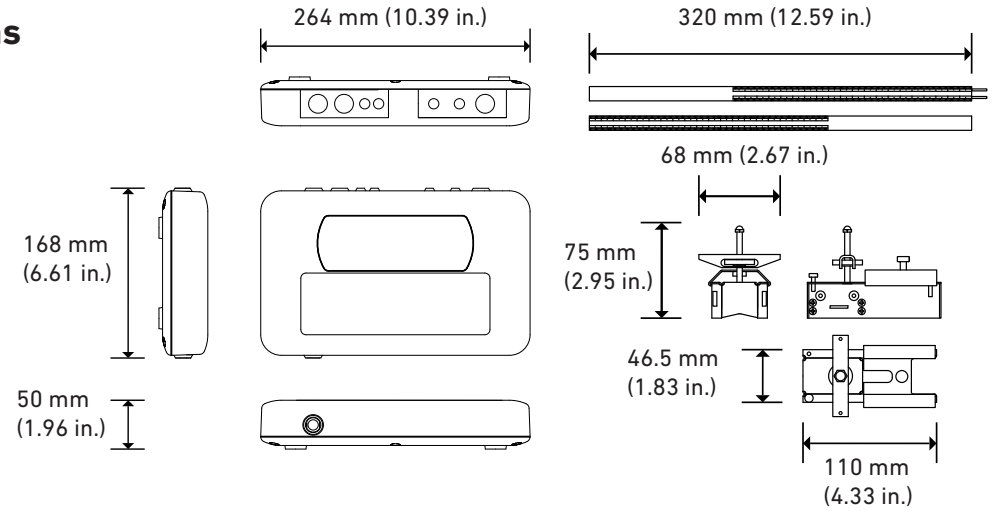

Signet Model D100 DeviceLink

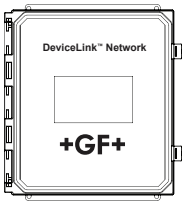

System Overview

220 Portable Ultrasonic Flowmeter

1 - Portaflow 220 instrument
2 - Ruled separation bar
3 - Transducers 'A-ST' x2 for use with pipes ranging 13mm – 114mm, or 'B-ST' x2
4 - Guide rail
5 - Chains x2 - 0.5 m long (1.65 ft) for A-ST, or 3.3 m long (10.8 ft) for B-ST type transducers
6 - Transducer cables (x2) 2 meters long
7 - Test block
8 - Acoustic couplant
9 - Output cable
10 - Power supply
11 - Manual (not shown)

The Portaflow 220 equipment is supplied in a Polypropylene carrying case fitted with a foam insert to give added protection for transportation.

Signet Model D100 DeviceLink

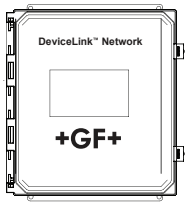

System Overview

330 Portable Ultrasonic Flowmeter

1 - Portaflow 330 instrument with backlit graphic display
2 - Ruled separation bar
3 - Transducers 'A-ST' x2 for use with pipes ranging 13mm – 114mm
4 - Transducers 'B-ST' x2 for use with pipes ranging 115mm – 2000mm
5 - Guide Rail
6 - Chains x2 3.3 m long (10.8 ft)
7 - Transducer cables (x2) 2 meters long
8 - Test block
9 - Acoustic couplant
10 - Output cable
11 - RS-232 cable
12 - USB cable
13 - Power supply
14 - Manual (not shown)

The Portaflow 330 equipment is supplied in a rugged IP67 carrying case fitted with a foam insert to give added protection for transportation.

Ordering Information

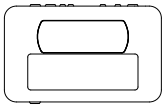

Mfr. Part No.	Code	Description
Standard		
PF 220 A	**159 300 002**	Portaflow PF220, for pipe OD 13 mm - 114 mm (0.51 in - 4.49 in)
PF 220 B	**159 300 003**	Portaflow PF220, type B transducers for pipe OD 50 mm - 1000 mm (1.97 in - 39.37 in)
PF 330 A+B	**159 300 001**	Portaflow PF330, type A and B transducers for pipe OD 13 mm - 2000 mm (4.53 in - 78.74 in), data logger

U1000 V2 Ultrasonic Flowmeter

The U1000 V2 is an ultrasonic permanent clamp-on flow metering solution for measuring flow rate. This cost effective device can either be used as a stand-alone meter or as an integral part of a control loop.

The U1000 V2 is very simple to install – clamp it on to the pipe, connect it to power and enter the pipe diameter. No expertise or special tools are required.

The "clamp-on" concept makes the installation of the sensors in running systems possible. The pipe does not have to be opened. Compact, robust and reliable – the U1000 V2 was designed for long-term use in industrial applications.

Features

- **Large, easy to read graphic display with backlighting**
- **Easy to install without special tools**
- **"Clamp-on" design**
- **Expanded size range (¾ inch to 6 inch)**
- **Simple to follow programming menu**
- **Simple quick-start set up procedure**
- **Compact integral design**

Applications

- **Ultrapure water measurement**
- **Flow measurement for heat metering**
- **Chilled water metering**
- **Flow measurement for energy metering**
- **Monitoring of manufacturing processes**
- **New Water / Glycol Measurement**

Specifications

General			
Measuring Method		Ultrasonic runtime measurement	
Flow Range		0.1 m/s – 10 m/s (0.3 ft/s - 33 ft/s), bi-directional	
Accuracy		± 3 % of the flow value with a flow rate > 0.3 m/s (1.0 ft/s)	
Repeatability		±0.5 % of measured value	
Response Time		< 500 ms	
Selectable Flow Units		Velocity	m/sec, ft/sec.
		Volume	l/s, l/min, gal/s, gal/min, USgal/s, USgal/min, m3/min, m3/hr
Selectable Totalizer Units		l, m3, gals, USgals	
Menu Languages		EN	
Environmental			
Operating Temperature		0 °C to 50 °C	-32 °F to 122 °F
Storage Temperature		-10 °C to +60 °C	-14 °F to 140 °F
Temperature of Pipe Wall		0 °C to 85 °C	-32 °F to 185 °F
Humidity During Operation		Max. 90 % relative humidity at +50 °C (122 °F)	
Suitable Pipe Types			
Pipe Materials		PVDF, PP-H, PE, PB, ABS, UPVC, CPVC, construction steel, iron, stainless steel 316	
Pipe Diameter (d)		d22 - d180 mm*	0.86 - 7 inch* (¾ inch to 6 inch)
Electronics			
Power Supply		12 to 24 V AC/DC	
Power Consumption		Max. 7 VA	
Outputs			
Analog Output	Range	4 to 20 mA	
	Resolution	0.1 % of measurement range	
	Load Max.	620 Ω	
	Insulation	1500 V optically isolated	
	Alarm Current	3.5 mA	
Pulse Output	Type	Opto-isolated MOSFET volt free contact (NO/NC)	
	Pulse Sequence	1 – 166 pps user-programmable frequency mode max. 200 Hz	
	Pulse Width	25 ms standard value, 3 – 99 ms user-programmable	
	Max. Voltage	48 V AC	
	Max. Current	500 mA	
	Insulation	2500 V optically isolated	
Housing and Display			
Material		Polycarbonate	
Dimensions		250 x 48 x 90 mm	9.85 x 1.9 x 3.55 inch
Weight		0.5 kg	1.1 lb
Keyboard		Keypad with 4 buttons	
Display	Type	LCD, 2 lines x 16 characters	
	Viewing Angle	Min. 30°, Max. 40°	
	Active Area	83 x 18.6 mm	3.3 x 0.73 inch
Protection class		IP 54	
Shipping Information			
Packet dimensions		290 x 280 x 100 mm	11.4 x 11 x 4 inch
Weight		1.4 kg	0.05 lb
Volume Weight		1.4 kg	0.05 lb
Standards and Approvals			
	CE, conforms to RoHS		
	Security	BS EN 61010-1:2001	
	EMV	BS EN 61326-1:2006	BS EN 61326-2-3:2006
	Environment	BS EN 60068-1:1995	
		BS EN 60068-2-1:2007	BS EN 60068-2-2:2007

* Measurable pipe sizes are dependent on pipe material and inner pipe diameter.

Dimensions

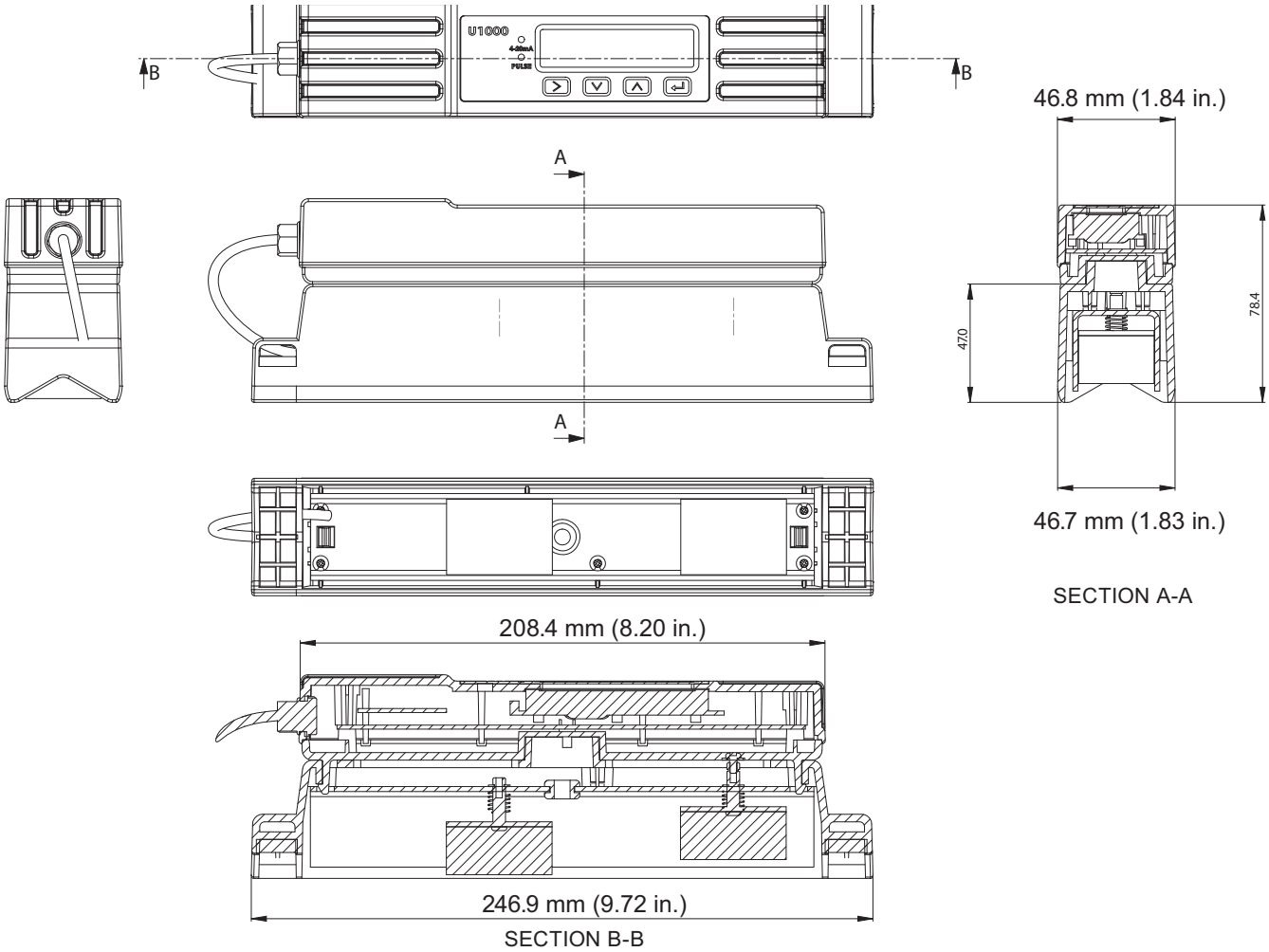

Function

The U1000 V2 functions, as do all current ultrasonic flow meters, according to the path-time principle of ultrasonic waves.

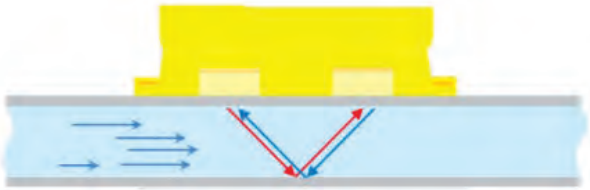

The device is installed directly on a pipe surface and transmits ultrasonic waves back and forth between the two sound transducers. Depending on the flow, a small time difference arises between the two ultrasonic signals – this is proportional to the flow speed.

The U1000 V2 is especially configured for pure water and can be used on PVDF-ABS, PVC, PP, PE, PB-Instaflex, iron and steel pipes. Processes can be monitored directly by a higher-level system via 4 to 20 mA, Modbus, pulse or frequency output

Technical data

No.	Description
1	Power supply (AC/DC)
2	Pipe bracket
3	Electronics module
4	Guide rail
5	User interface
6	Pipe

Ordering Information

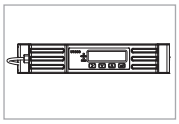

Mfr. Part No.	Code	Description
U1000 V2	**159 300 300**	U1000 V2, 4 to 20 mA & Frequency, d22 - d115 (¾ in. to 4 in.)
U1000 V2	**159 300 301**	U1000 V2, 4 to 20 mA & Frequency, d125 - d180 (5 in. to 6 in.)
U1000 V2	**159 300 302**	U1000 V2, Modbus & Frequency, d22 - d115 (¾ in. to 4 in.)
U1000 V2	**159 300 303**	U1000 V2, Modbus & Frequency, d125 - d180 (5 in. to 6 in.)

Ultraflow U3000 / U4000 Ultrasonic Flowsensor

The Ultraflow brings simplicity to the non-invasive measurement of liquid flow, offering the user quick and accurate flow measurement with its easy to follow menu and simple set up. Dry servicing, providing minimum downtime and maximum availability, even in a continuously running system. Compact, rugged and reliable, the Ultraflow has been designed to provide sustained performance in industrial environments.

Features

- **Large, easy to read graphic display**
- **Easy to install**
- **Clamp-on sensors for dry servicing**
- **Simple to follow programming menu**
- **Simple 'Quick Start' set up procedure**
- **Data logger for 198 k data points (Type U4000)**
- **Analog, pulse and alarm outputs**
- **Reynolds number correction**

CE

Applications

- **HVAC & Energy System Audits**
- **Pump Verification**
- **Process Control**
- **Chemical Addition**
- **Hydraulic Systems**
- **Fire Systems**
- **Leak Detection**
- **Boiler Testing**

Specifications

General		
DSP Measurement Technique	Transit time	
Flow Velocity Range	0.1 m/s - 20 m/s (0.33 f/s - 66 f/s)	
Accuracy	Pipe ID >75 mm	±0.5% to ±3% of flow reading for flow rate >0.2 m/s (0.66 f/s)
	Pipe ID 13 mm - 75 mm	±3% of flow reading for flow rate >0.2 m/s (0.66 f/s)
Repeatability	±0.5% of measured value or ±0.02 m/s (0.066 f/s) whichever is the greater	
Response Time	< 500 ms depending on pipe diameter.	
Selectable Flow Units	Velocity	m/sec, ft/sec.
	Volume	l/s, l/min, l/h, gal/min, gal/h, USgals/min, USgals/h, Barrel/h, Barrel/day, m^3/s, m^3/min, m^3/h.
Selectable Total Volume Units	liters, m^3, gallons, US gallons, barrels	
Total Volume	12 Digits	
Menu Languages	EN, DE, FR, RU, SWE, IT, SP, P, NO, DEN	
Environmental		
Operating Temperature	-20 °C to 50 °C	-4 °F to 122 °F
Storage Temperature	-25 °C to 75 °C	-13 °F to 167 °F
Pipe Wall Temperature	-20 °C to 135 °C	-4 °F to 275 °F
Operating Humidity	Max. 90% relative humidity @ 50 °C (122 °F)	
Applicable Pipe Types		
Pipe Materials	PVDF-SYGEF, PP-PROGEF, PE-ELGEF, PB-INSTAFLEX, ABS, PVC-U/PVC-C, Mild Steel, Ductile Iron, Stainless Steel 316, Copper	
Pipe Dimension (OD)	13 mm to 2000 mm	0.5 in. to 78 in.
Pipe Wall Thickness	1 mm to 75 mm	0.04 in. to 3 in.
Pipe Lining	Applicable pipe linings include Rubber, Glass, Concrete, Epoxy, Steel	
Pipe Lining Thickness	0 mm to 25 mm	0 in. to 1 in.
Electrical		
Supply Voltage	12 - 24 V AC or DC; 86 - 264 V AC (47Hz to 63Hz)	
Power Consumption	Max. 10.5 W	
Outputs		
Analog Output	Range	4 to 20 mA, 0 to 20 mA, 0 to 16 mA
	Resolution	0.1% of full scale
	Load Max.	620 Ω
	Isolation	1500 V Opto-isolated
	Alarm Current	Adjustable between 0–26 mA
Pulse Output	Type	Digital MOSFET relay
	Pulse Repetition	1 to 250 pps, user programmable
	Pulse Width	2 to 500 ms, user programmable
	Voltage Max.	48 V
	Current Max.	500 mA
	Isolation	1500 V opto isolated
Alarm Outputs	Type	2 x MOSFET relays
	Voltage Max.	48 V
	Current Max.	500 mA
	Isolation	1500 V opto isolated
	Alarm Function	High / Low flow rate, flow volume or signal error
USB Interface (U4000 only)	Protocol	Supports full speed (12Mbits/sec) data connection
	Software	USB driver software is provided with the package
	Connector	Mini USB
RS-232 Interface (U4000 only)	Protocol	"Serial RS-232 communication including XON/XOFF handshaking"
	Terminal Block	GND, RxD, TxD

Specifications continued

Data Logger (U4000 only)			
Data Logged		Log application details, flow rate, unit, time stamp	
Number of Data Points		198 k	
Number of Data Sites		20	
Number of Data Points per Site		No limit (max. 198k)	
Programmable Logging Interval		5 s - 1 h	
Start / Stop		Manually or timer controlled	
Data Download		Via RS232 / USB interface	
Transducer sets			
	Type A	13 - 114 mm pipe O.D. (2 MHz)	
	Type B	115 - 2000 mm pipe O.D. (1 MHz)	
Enclosure and Display			
Material		ABS and aluminium	
Dimensions		230 x 180 x 120 mm	9.0 x 7.1 x 4.7 inch
Weight		1.2 kg	2.65 lb
Keypad		"15 key tactile feedback membrane keypad"	
Display	Type	240 x 64 pixel graphic display, high contrast black-on-white, with backlight.	
	Viewing Angle	Min. 30°, typically 40°	
	Active Area	127 x 34 mm	5 x 1.3 inch
IP Rating		IP 65	
Shipping Weight			
Box Dimensions		480 x 320 x 230 mm	19 x 12.5 x 9 inch
Weight		4.8 kg	10.6 lb
Volumetric Weight		5.8 kg	12.8 lb
Standards and Approvals			
	CE, RoHS compliant, Imported from Europe		
	EMC	BS EN 61326-1:2006	BS EN 61326-2-3:2006
	Safety	BS EN 61010-1:2001	
	Environmental	BS EN 60068-1:1995	BS EN 60068-2-1:2007
		BS EN 60068-2-2:2007	

Dimensions

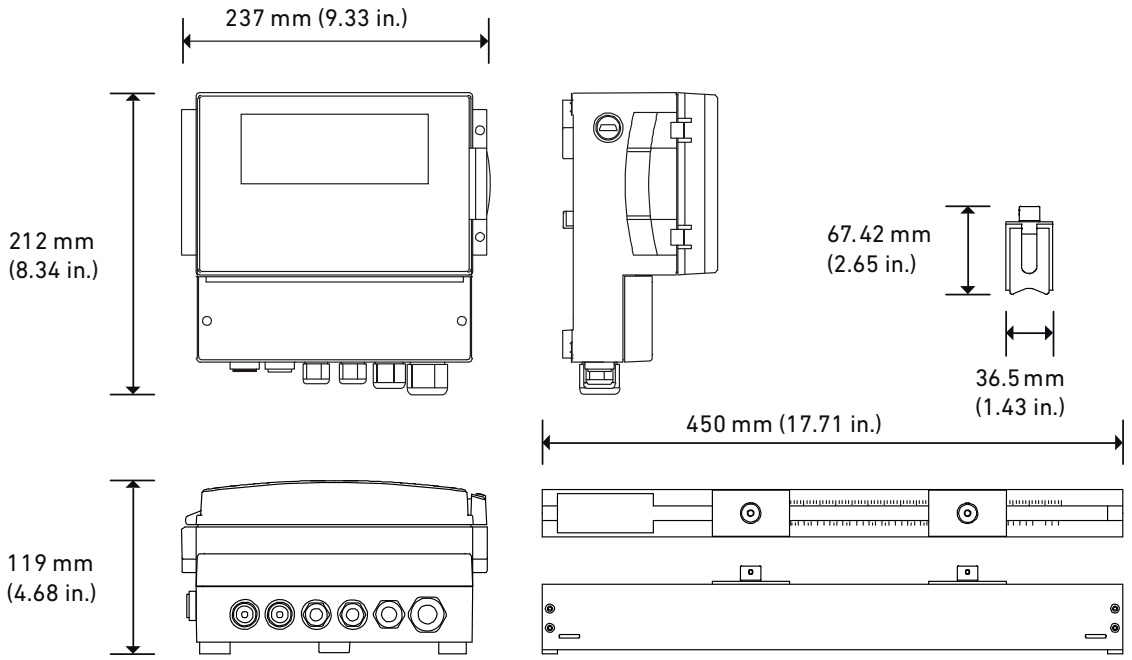

Signet Model D100 DeviceLink

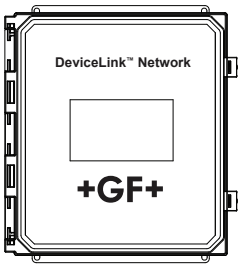

System Overview

1 - Instrument with backlit graphic display
2 - Guide rail for use with 'A' or 'B' transducers
3 - Steel bands used to secure the transducer guide rails to the pipe
4 - Transducers 'A-ST' x2 (U3000/U4000A) for use with pipes ranging 13 mm – 114 mm
5 - Transducers 'B-ST' x2 (U3000/U4000B) for use with pipes ranging 115 mm – 2000 mm
6 - User documentation
7 - Acoustic couplant
8 - USB cable and RS232-C cable (U4000)
9 - Transducer cables (x2) 10 meters long

Ordering Information

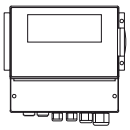

Mfr. Part No.	Code	Description
Supply Voltage 230 V AC		
U3000A d13-114	**159 300 004**	Ultraflow U3000, for pipe OD 0.5 in. - 4.5 in. (13 - 114 mm)
U3000B d115-299	**159 300 006**	Ultraflow U3000, for pipe OD 4.5 in. - 11.8 in. (115 - 299 mm)
U3000B d300-2000	**159 300 075**	Ultraflow U3000, for pipe OD 11.8 in. - 77.7 in. (300 - 200 mm)
U4000A d13-114	**159 300 008**	Ultraflow U4000, for pipe OD 0.5 in. - 4.5 in. (13 - 114 mm), data logger
U4000B d115-299	**159 300 010**	Ultraflow U4000, for pipe OD 4.5 in. - 11.8 in. (115 - 299 mm, data logger
U4000B d300-2000	**159 300 076**	Ultraflow U4000, for pipe OD 11.8 in. - 77.7 in. (300 - 200 mm), data logger
Supply Voltage 24 V DC		
U3000A d13-114	**159 300 005**	Ultraflow U3000, for pipe OD 0.5 in. - 4.5 in. (13 - 114 mm)
U3000B d115-299	**159 300 007**	Ultraflow U3000, for pipe OD 4.5 in. - 11.8 in. (115 - 299 mm)
U3000B d300-2000	**159 300 077**	Ultraflow U3000, for pipe OD 11.8 in. - 77.7 in. (300 - 200 mm)
U4000A d13-114	**159 300 009**	Ultraflow U4000, for pipe OD .5 in. - 4.5 in. (13 - 114 mm), data logger
U4000B d115-299	**159 300 011**	Ultraflow U4000, for pipe OD 4.5 in. - 11.8 in. (115 - 299 mm, data logger
U4000B d300-2000	**159 300 079**	Ultraflow U4000, for pipe OD 11.8 in. - 77.7 in. (300 - 200 mm), data logger

Signet 2000 Micro Flow Rotor Sensor

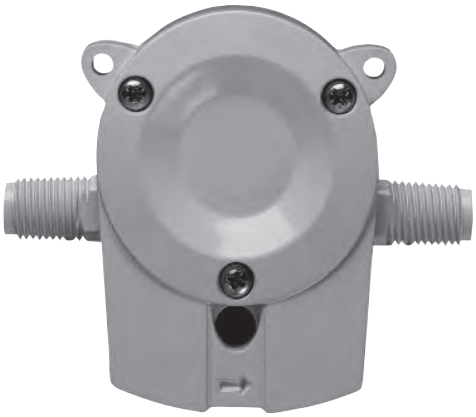

The Signet 2000 Micro Flow Rotor Sensor is constructed of Polyphenylene Sulfide (PPS) which provides high material strength. The 2000 offers two flow ranges starting at 0.11 or 1.13 lpm (0.03 or 0.3 gpm), for clean process liquids, regardless of fluid color or opacity.

This sensor can be connected to flexible tubing or rigid pipe, and uses standard hardware for mounting. Only one moving part and a low pressure drop across the sensor reduces operating costs and maintenance requirements.

Features

- **Operating range 0.11 to 12.11 lpm (0.03 to 3.2 U.S. gpm)**
- **Simple mounting**
- **¼ in. NPT or ISO threads for simple pipe or tubing connection**
- **Measures opaque and transparent liquids**
- **Low pressure drop**
- **Standard cable 7.6 m (25 ft)**

Applications

- **Coolant Flow**
- **Dosing**
- **Batch Dispensing**
- **Not recommended for Strong Oxidizers**

Specifications

General			
Operating Range	-11 & -12 version	0.11 to 2.6 lpm	0.03 to 0.7 U.S. gpm
	-21 & -22 version	1.13 to 12.11 lpm	0.3 to 3.2 U.S. gpm
Linearity	±1.2% of full range		
Repeatability	±0.5% of full range		
Connections	¼ in. NPT (male) or ISO 7/1 - R1/4 (male)		
Wetted Materials			
Sensor Body and Cover	40% glass filled Polyphenylene Sulfide (PPS)		
Rotor	PEEK®, natural, unfilled		
Cover O-ring	FKM		
Electrical			
Power	5 to 24 VDC ±10%, regulated, 10 mA max.		
Output Type	Open-collector, sinking, 20 mA max.		
Cable Length	7.6 m (25 ft), can be extended up to 305 m (1000 ft)		
Cable Type	2-conductor twisted pair w/shield, 22 AWG		
Max. Temperature/Pressure Rating			
	0 °C to 80 °C @ 5.5 bar max.	32 °F to 176 °F @ 80 psi max.	
Shipping Weight			
	0.03 kg	0.7 lb	
Standards and Approvals			
	Made in USA from US and Imported Parts		
	Manufactured under ISO 9001 for Quality and ISO 14001 for Environmental Management and OHSAS 18001 for Occupational Health and Safety		

See Temperature and Pressure graphs for more information.

Dimensions

Top View

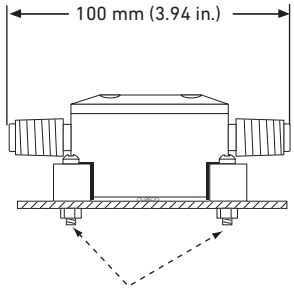

Mounting tabs for metric M3 or standard #6 screws on 68 mm (2.68 in.) bolt circle

Side View

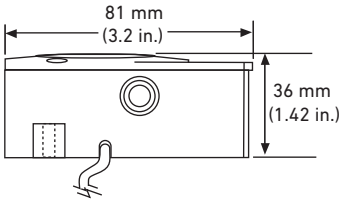

Cover Removed

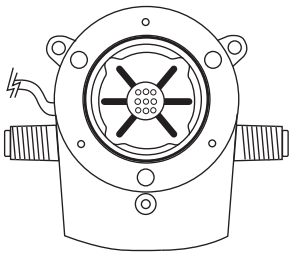

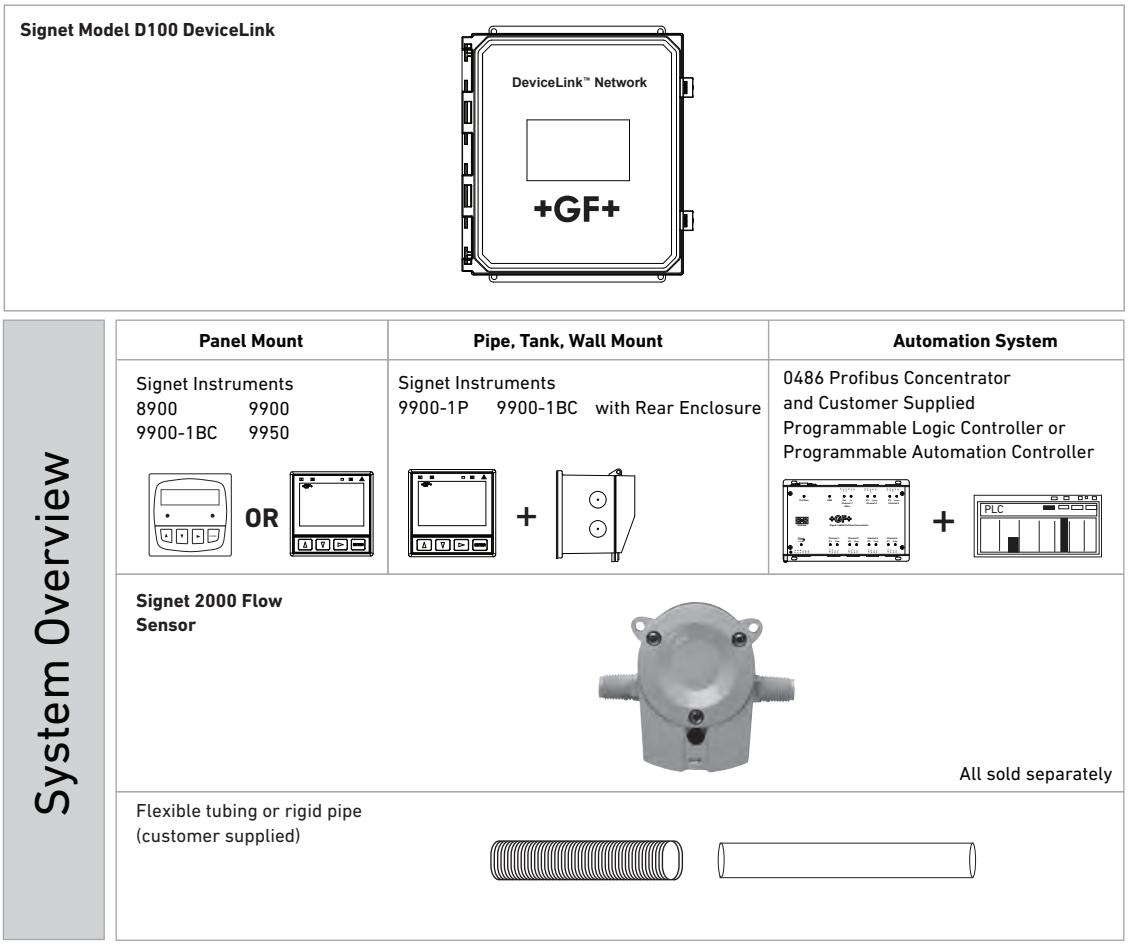

Application Tips

- For use in clean fluids - no suspended solids.
- Use the mounting tabs to secure the sensor to a flat horizontal surface, ±30°.
- Verify chemical compatibility before installation.

Temperature/Pressure Graphs

Note:
The pressure/temperature graphs are specifically for the Signet sensor. During system design the specifications of all components must be considered. In the case of a metal piping system, a plastic sensor will reduce the system specification.

Low Flow

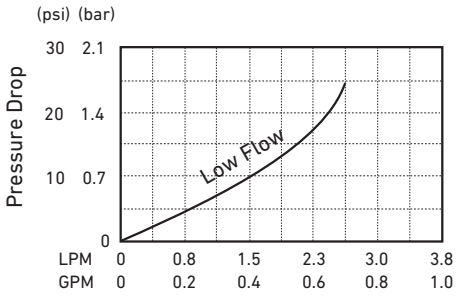

High Flow

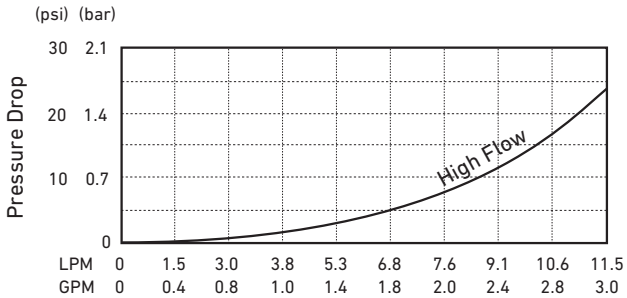

Please refer to Wiring, Installation, and Accessories sections for more information.

Ordering Information

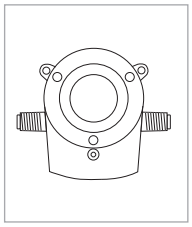

Mfr. Part No.	Code	Flow Range	End Fittings
Micro Flow Rotor Flow Sensor			
3-2000-11	**198 822 000**	Low flow, 0.11 to 2.61 lpm (0.03 to 0.7 gpm)	¼ NPT threads
3-2000-12	**198 822 001**	Low flow, 0.11 to 2.61 lpm (0.03 to 0.7 gpm)	ISO 7/1-R1/4 threads
3-2000-21	**198 822 002**	High flow, 1.13 to 12.11 lpm (0.3 to 3.2 gpm)	¼ NPT threads
3-2000-22	**198 822 003**	High flow, 1.13 to 12.11 lpm (0.3 to 3.2 gpm)	ISO 7/1-R1/4 threads

Accessories and Replacement Parts

Mfr. Part No.	Code	Description
3-2000.390	**159 000 248**	Replacement rotor kit
1220-0029	**198 820 049**	Cover O-ring
2450-0620	**198 820 051**	Cover screw, each
5523-0222	**159 000 392**	Cable (per foot), 2 cond. w/shield, 22 AWG

Signet 2100 Turbine Flow Sensor

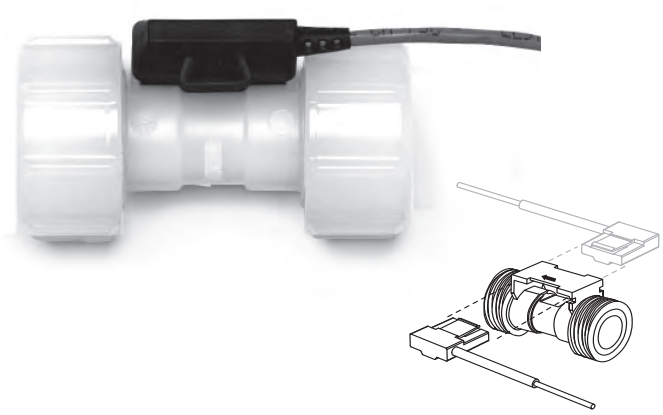

Engineered specifically for small pipe diameter applications, the Signet 2100 Turbine Flow Sensor provides accurate readings in two flow ranges: 0.3 to 3.8 lpm and 3 to 38 lpm (0.1 to 1 gpm and 0.8 to 10 gpm).

The injection-molded PVDF body and ceramic bearings provide excellent chemical compatibility and long service in dosing and batching applications. Union piping and tubing connections along with removable NEMA 4X electronics allow for easy assembly and field replaceability. The 2100 can be used with DN8 (¼ in.), DN10 (3/8 in.), DN15 (½ in.) tubing, or DN15 (½ in.) piping for simple installation. End connections are available in PVDF for hose barbs, fusion socket or IR/butt fusion, and in PVC for socket or NPT thread.

Features

- **Operating range of 0.38 to 38 lpm (0.10 to 10 U.S. gpm)**
- **Non-magnetic turbine**
- **Union ends for various connector types**
- **End connector kits for rigid or flexible tubing or DN15 (½ in.) pipe**
- **PVDF & ceramic wetted parts provide superior chemical compatibility**
- **For use with both clear and opaque fluids**
- **Small and compact design**
- **4.6 m (15 ft) cable**
- **Features removable electronics that install from either side of the sensor**

Applications

- **Chemical Addition**
- **Textile Dyeing**
- **High-purity Chemical Dispensing**
- **Water Addition**
- **Fertigation**
- **Dosing**
- **Pump Protection**
- **Not suitable for gases**

Specifications

General		
Flow Range	-L = 0.38 to 3.8 lpm	0.10 to 1 U.S. gpm
	-H = 3 to 38 lpm	0.8 to 10 U.S. gpm
Accuracy	±3% of reading	
Repeatability	±0.5% of reading	
Pipe Size Range	DN15 (½ in.)	
Tubing Size	DN8 (¼ in.), DN10 (3/8 in.), DN15 (½ in.)	
Wetted Materials		
Sensor Body/Rotor	PVDF	
Shaft/Bearings	Ceramic	
O-rings	-1 = FKM, -2 = EPR (EPDM)	
Electronics Housing	PBT (polybutylene terephthalate)	
	EVA (ethylene vinyl acetate)	
Electrical		
Power	5 to 24 VDC ±10%, regulated, 1.5 mA max.	
	Reverse polarity protected	
Output	Open collector, sinking, max 30 mA	
Cable Length	4.6 m (15 ft) can be extended up to 305 m (1000 ft)	
Cable Type	PVC jacketed, 2 conductor twisted pair with shield (22 AWG)	
Max. Temperature/Pressure Rating		
	16 bar @ 20 °C	232 psi @ 68 °F
	9.3 bar @ 70 °C	130 psi @ 158 °F
Operating Temperature	-20 °C to 70 °C	-4 °F to 158 °F
Storage Temperature	-15 °C to 80 °C	5 °F to 176 °F
Shipping Weight		
	0.15 kg	0.33 lb
Standards and Approvals		
	CE, FCC, Imported from Europe	
	RoHS compliant, China RoHS	
	Manufactured under ISO 9001 for Quality and ISO 14001 for Environmental Management and OHSAS 18001 for Occupational Health and Safety	

See Temperature and Pressure graphs for more information.

Dimensions

L = overall length		
All sockets	102 mm	4 in.
Butt fusion/IR	170 mm	6.7 in.
1/4 in. Barb	124 mm	4.9 in.
3/8 in. Barb	127 mm	5 in.
1/2 in. Barb	132 mm	5.2 in.

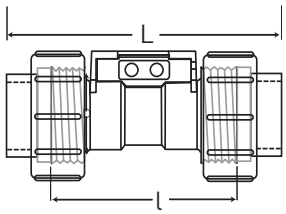

l = 64 mm (2½ in.) Electronics module

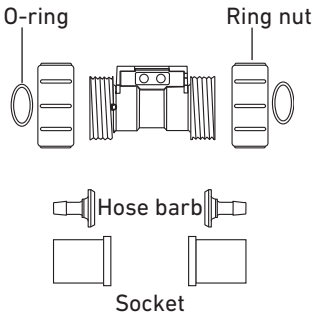

Temperature/Pressure Graphs

Note:
The pressure/temperature graphs are specifically for the Signet sensor. During system design the specifications of all components must be considered. In the case of a metal piping system, a plastic sensor will reduce the system specification. When using a PVDF sensor in a PVC piping system, the fitting will reduce the system specification.

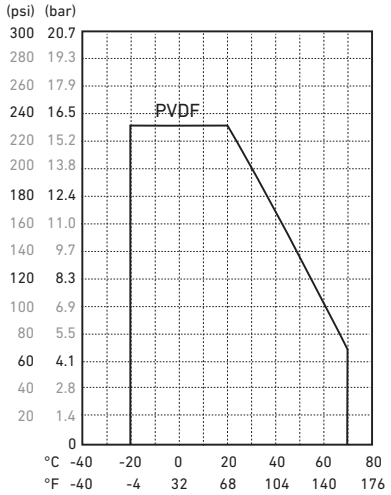

High Flow

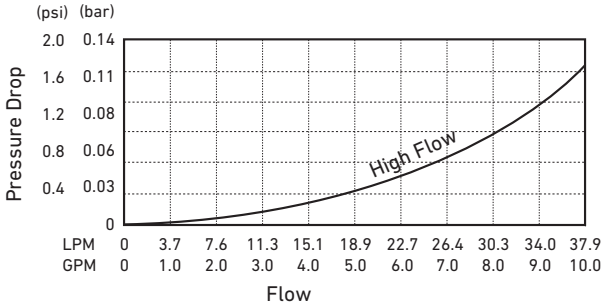

Low Flow

2100 - Pressure Drop-Very Low Flow

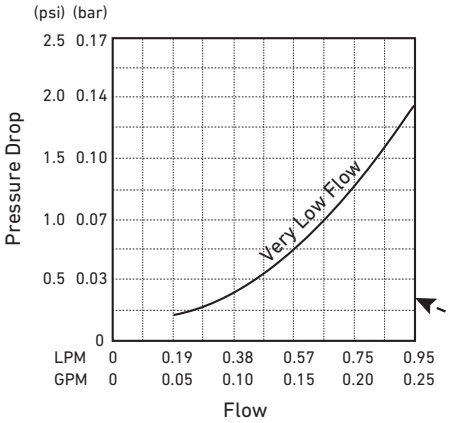

2100 - Pressure Drop-Low Flow

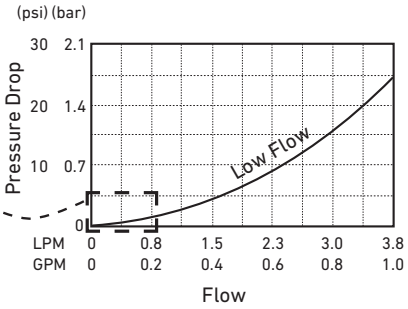

Please refer to Wiring, Installation, and Accessories sections for more information.

Signet Model D100 DeviceLink

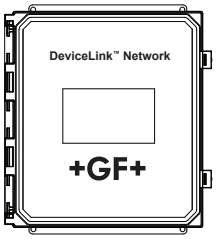

System Overview

Panel Mount	Pipe, Tank, Wall	Automation System
Signet Instruments 8900 9900 9900-1BC 9950	Signet Instruments 9900 with Rear Enclosure	0486 Profibus Concentrator and Customer Supplied Programmable Logic Controller or Programmable Automation Controller

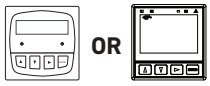

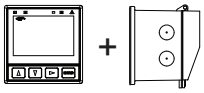

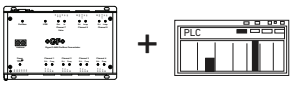

Signet 2100 Flow Sensor

End Connector options

Fusion, threaded or solvent socket connectors for DN15 (1/2 in.) pipe

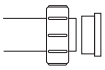

Hose barb connectors for DN8, DN10, or DN15 (1/4 in., 3/8 in. or 1/2 in.) flexible tubing

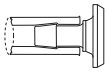

All sold separately

Application Tips

- All socket and hose barb connector kits are sold individually. Two kits are required for each sensor
- Junction block, 3-8050-1 recommended if standard cable is extended to maximum 305 m (1000 ft)

Ordering Information

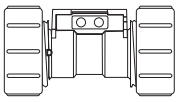

Mfr. Part No.	Code	O-ring Material	Flow Range
Turbine flow sensor, PVDF body and rotor, for use with various end-connectors			
3-2100-1L	**159 000 001**	FKM	low, 0.38 to 3.8 lpm (0.10 to 1 gpm)
3-2100-2L	**159 000 003**	EPR (EPDM)	low, 0.38 to 3.8 lpm (0.10 to 1 gpm)
3-2100-1H	**159 000 002**	FKM	high, 3 to 38 lpm (0.8 to 10 gpm)
3-2100-2H	**159 000 004**	EPR (EPDM)	high, 3 to 38 lpm (0.8 to 10 gpm)

*Note: To install this flow sensor, end fittings must be installed on both ends of the sensor.
See selection below

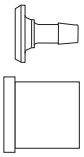

Mfr. Part No.	Code	Type of End Fitting
End fitting for Model 2100 sensor		
3-2100-31	**159 000 005**	Hose barb connector kit, PVDF, ½ inch (1-hose barb and 1-ring nut)
3-2100-32	**159 000 006**	Hose barb connector kit, PVDF, 3/8 inch (1-hose barb and 1-ring nut)
3-2100-33	**159 000 007**	Hose barb connector kit, PVDF, ¼ inch (1-hose barb and 1-ring nut)
3-2100-34	**159 000 008**	Fusion socket connector, PVDF, DN15 ½ inch (1-fusion socket and 1 ring nut)
3-2100-35	**159 000 009**	Butt Fusion/IR connector kit, PVDF, DN15 ½ inch (1-IR socket and 1 ring nut)
3-2100-36	**159 000 010**	Metric socket connector kit, PVC, ½ inch (1-solvent socket and 1 ring nut)
3-2100-37	**159 000 011**	SCH 80 socket connector kit, PVC, ½ inch (1-solvent socket and 1 ring nut)
3-2100-38	**159 000 012**	NPT thread socket connector kit, PVC, ½ inch (1-threaded socket and 1 ring nut)

Accessories and Replacement Parts

Mfr. Part No.	Code	Description
1220-0018	**159 000 019**	O-rings FKM (2 required per sensor)
1224-0018	**159 000 020**	O-rings EPR (EPDM) (2 required per sensor)
5523-0222	**159 000 392**	Cable (per foot), 2 cond. w/shield, 22 AWG

Signet 2507 Mini Flow Rotor Sensor

The Signet 2507 Mini Flow Rotor Sensor contains a free-running rotor that is driven by the fluid flow. Within the given measurement range, the rotational speed of the rotor is proportional to the fluid flow rate.

Magnets built into the rotor trigger an electronic switch in the top of the sensor creating a square-wave output. Both opaque and transparent fluids can be measured with kinematic viscosities between 0.2 to 20.0 centistokes.

Features

- **Operating range 100 to 12,000 ml/m (0.026 to 3.2 U.S. gpm)**
- **Detachable signal connector for easy servicing**
- **Simple installation with a G 1/4 in. (¼ in. NPT) threaded connection**
- **Standard 7.6 m (25 ft) cable**
- **PVDF construction**
- **Compact assembly**

Applications

- **Fluid Dispensing**
- **Laboratory and Clinical Wet Benches**
- **Chemical Dosing**
- **Batch Processes**

Specifications

General			
Operating Range	-1V sensor	100 to 2000 mL/m	(0.026 to 0.528 U.S. gpm)
	-2V sensor	400 to 2800 mL/m	(0.105 to 0.740 U.S. gpm)
	-3V sensor	700 to 4200 mL/m	(0.185 to 1.123 U.S. gpm)
	-4V sensor	1300 to 6000 mL/m	(0.343 to 1.585 U.S. gpm)
	-6V sensor	3200 to 12000 mL/m	(0.845 to 3.170 U.S. gpm)
Accuracy	±2% of reading		
Repeatability	±0.25% of full range		
Viscosity Range	0.2 to 20.0 centistokes		
Connections	G 1/4 in. ports, ¼ in. NPT pipe adapters (2 included)		
Wetted Materials			
Housing	PVDF		
Flow Insert	PTFE		
Quad Ring Seal	FKM		
Rotor	PVDF		
Pipe Thread Adapters	PVDF		
Electrical			
Power	5 to 24 VDC ±10%, regulated, 10 mA max.		
Output Type	Open-collector, sinking, 10 mA max.		
Cable Length	7.6 m (25 ft), can be extended up to 305 m (1000 ft)		
Cable Type	2-conductor shielded twisted-pair, 22 AWG		
Max. Temperature/Pressure Rating			
	5.5 bar @ -18 °C	80 psi @ 0 °F	
	5.5 bar @ 24 °C	80 psi @ 75 °F	
	3 bar @ 120 °C	45 psi @ 248 °F	
Shipping Weight			
	0.115 kg	0.25 lb	
Standards and Approvals			
	CE, FCC, Imported from Europe		
	RoHS compliant, China RoHS		
	Manufactured under ISO 9001 for Quality and ISO 14001 for Environmental Management and OHSAS 18001 for Occupational Health and Safety		

See Temperature and Pressure graphs for more information.

Dimensions

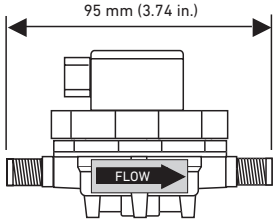

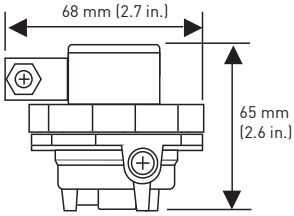

Detachable Signal Connector

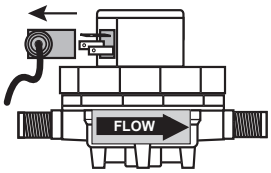

Top View
(cover removed)

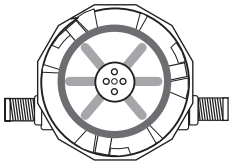

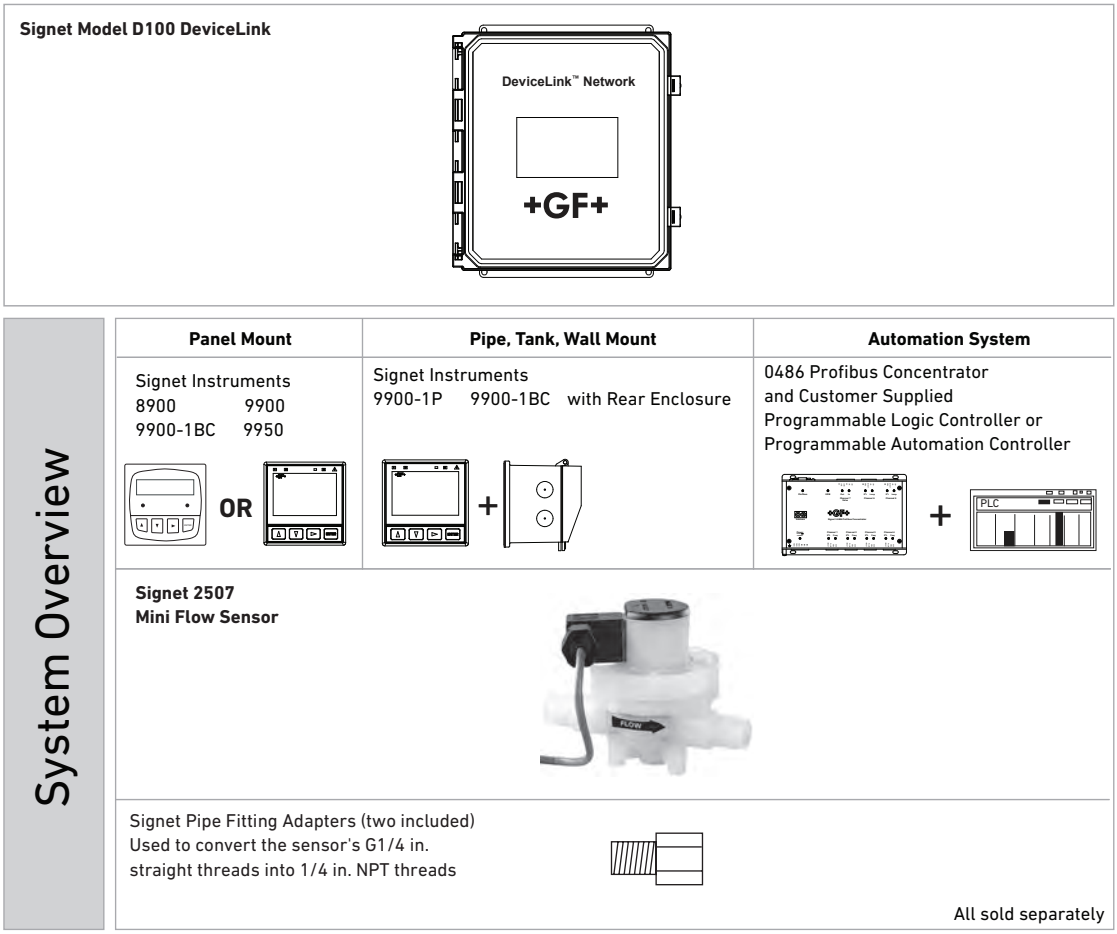

Application Tips

- Use the threaded ports on bottom of sensor to secure the sensor to any flat surface.
- The range of any sensor can be changed by replacing the flow insert.
- Suitable only for clean fluids without particles.

Temperature/Pressure Graphs

Note:
The pressure/temperature graphs are specifically for the Signet sensor. During system design the specifications of all components must be considered. In the case of a metal piping system, a plastic sensor will reduce the system specification. When using a PVDF sensor in a PVC piping system, the pipe will reduce the system specification.

High Flow

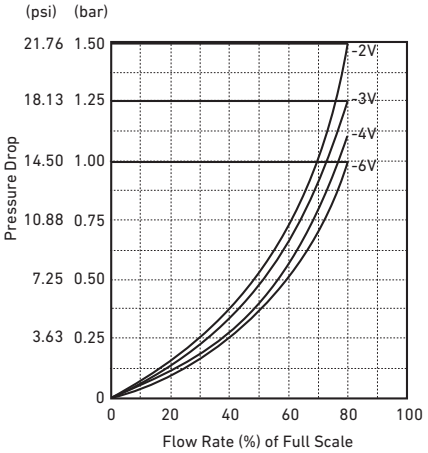

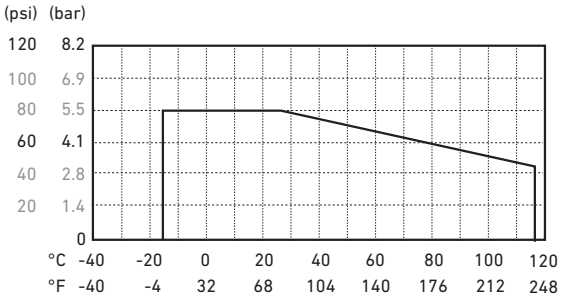

Please refer to Wiring, Installation, and Accessories sections for more information.

Ordering Information

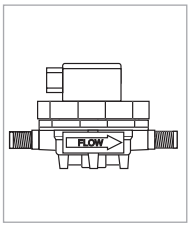

Mfr. Part No.	Code	Insert Option
Mini Flow low flow sensor with free-running rotor		
3-2507.100-1V	**Special Order**	With 1 mm insert; for 0.26 to 0.528 gpm (100 to 2000 mL/m)
3-2507.100-2V	**198 801 732**	With 2 mm insert; for 0.15 to 0.740 gpm (400 to 2800 mL/m)
3-2507.100-3V	**198 801 733**	With 3 mm insert, for 0.185 to 1.123 gpm (700 to 4200 mL/m)
3-2507.100-4V	**198 801 734**	With 4 mm insert, for 0.343 to 1.585 gpm (1300 to 6000 mL/m)
3-2507.100-6V	**198 801 736**	With 6 mm inlet, no insert, for 0.845 to 3.170 gpm (3200 to 12000 mL/m)

Accessories and Replacement Parts

Mfr. Part No.	Code	Description
3-2507.080-2	**198 801 550**	Rotor, 2507
3-2507.080-3	**198 801 547**	Quad ring, 2507
3-2507.080-5	**198 801 508**	DIN connector, 2507
3-2507.081-1	**Special Order**	1 mm insert available on special request
3-2507.081-2	**198 801 502**	2 mm insert
3-2507.081-3	**198 801 503**	3 mm insert
3-2507.081-4	**198 801 558**	4 mm insert
5523-0222	**159 000 392**	Cable (per foot), 2 cond. w/shield, 22 AWG

Signet 3519 Flow Wet-Tap Valve

The Signet 3519 Flow Wet-Tap Valve serves as a unique interface between the installation fitting and the wet-tap style Signet 515 or 2536 Rotor-X flow sensor. It provides a fast method of removing the sensor from the pipe under specified operating pressures. The PVC and stainless steel design of the Wet-Tap makes it resistant to corrosion and chemical attack by acids, alkalies, salt, and a number of other harsh chemicals.

The Signet 3519 Wet-Tap Valve mounts directly onto standard Signet installation fittings. The 3519 Wet-Tap consists of a flange and support plate that threads onto the pipe fitting insert, and a PVC ball valve through which an extended length sensor is inserted into the pipe.

Features

- **Allows sensor removal without process shutdown**
- **Pressure release valve for safe sensor removal**
- **Dual safety lanyards**
- **Rugged corrosion-resistant PVC construction and stainless steel hardware**
- **Compatible with Signet 515 or 2536 Rotor-X Wet-Tap Flow Sensors**
- **Eliminates process downtime**

Applications

- **Filtration Systems**
- **Chemical Production**
- **Pump Protection**
- **Scrubbers**
- **Water Distribution**
- **Effluent Totalization**
- **Process Cooling Loops**

Specifications

General		
Body	PVC	
Ball Seats	PTFE	
O-Rings	FKM (std) or EPR (EPDM) also available, contact factory	
Hardware	303 SS (brackets), 18/8 SS (nuts & bolts)	
Max. Temperature/Pressure Rating		
	7 bar max. @ 20 °C	100 psi max. @ 68 °F
	1.4 bar max. @ 66 °C	20 psi max. @ 150 °F
Wet-Tap Maximum Installation/Removal Rating		
	1.7 bar @ 22 °C	25 psi @ 72 °F
Shipping Weight		
	1.3 kg	2.86 lb
Standards and Approvals		
	CE, FCC, Made in USA from US and Imported Parts	
	Manufactured under ISO 9001 for Quality and ISO 14001 for Environmental Management and OHSAS 18001 for Occupational Health and Safety	

See Temperature and Pressure graphs for more information.

Dimensions

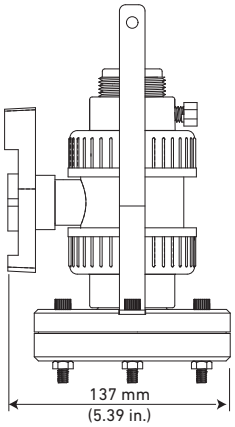

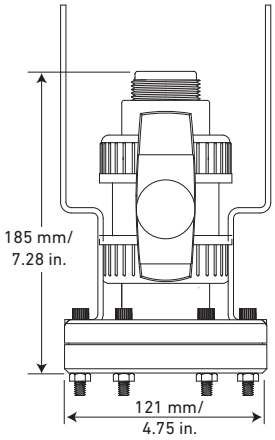

Model 515 or 2536 Wet-Tap Sensor

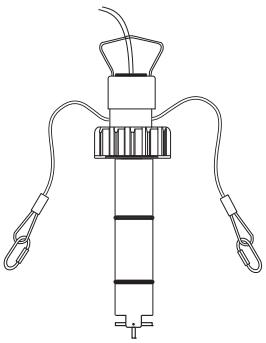

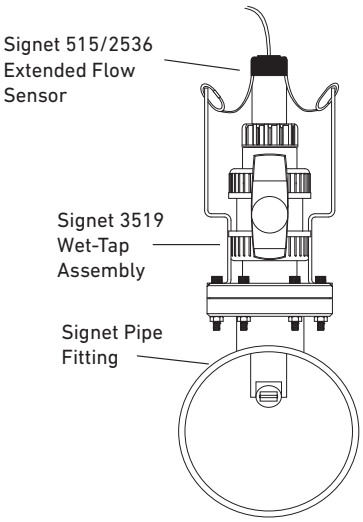

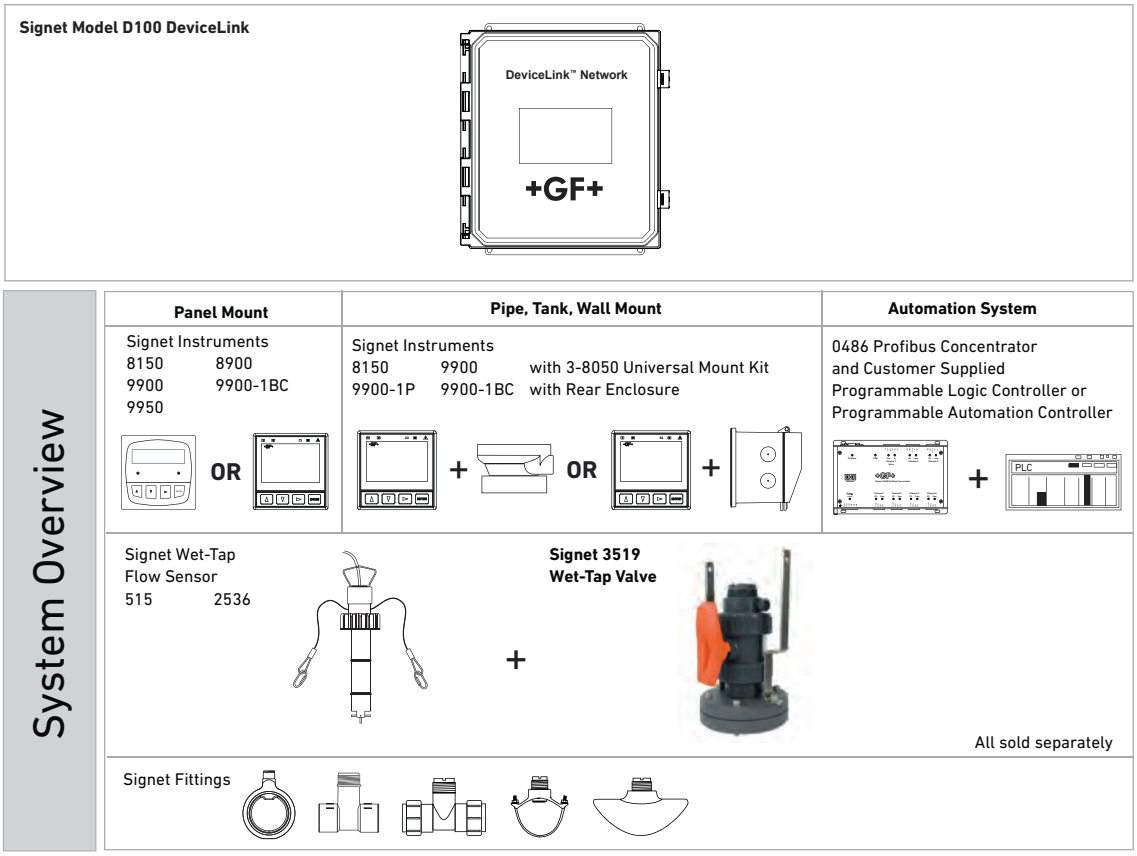

*See Fittings section for more information.

Application Tips

- Once installed, sensor insertion and removal can be performed without process shutdown; see installation/removal pressure specifications page.
- Use the Conduit Adapter Kit in outdoor environments. See Accessories section.
- For liquids containing ferrous particles, use Signet Magmeters.
- Use sensors with sleeved rotors in abrasive liquids to reduce wear.
- For systems with components of more than one material, maximum temperature and pressure specifications must always be referenced to the component with the lowest rating.

Temperature/Pressure Graphs

Note:
The pressure/temperature graphs are specifically for the Signet sensor. During system design the specifications of all components must be considered. In the case of a metal piping system, a plastic sensor will reduce the system specification. When using a PVDF sensor in a PVC piping system, the fitting will reduce the system specification.

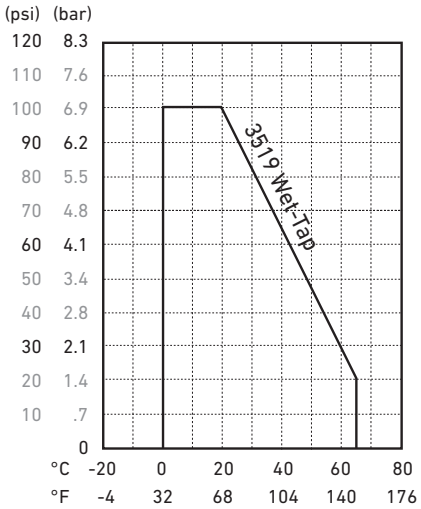

Please refer to Wiring, Installation, and Accessories sections for more information.

Ordering Information

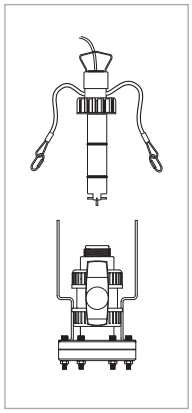

Mfr. Part No.	Code	Flow Range
3-3519	**159 000 757**	Wet-Tap Valve only for 515 and 2536 Wet-Tap flow sensors
for ½ to 4 inch pipes (15-100 mm)		
P51530-P3*	**198 840 310**	Polypro extended length paddlewheel sensor
3-2536-P3**	**159 000 758**	Polypro extended length low flow paddlewheel sensor
for 5 to 8 inch pipes (125-200 mm)		
P51530-P4*	**198 840 311**	Polypro extended length paddlewheel sensor
3-2536-P4**	**159 000 759**	Polypro extended length low flow paddlewheel sensor
for 10 to 36 inch pipes (250 mm and up)		
P51530-P5*	**198 840 312**	Polypro extended length paddlewheel sensor
3-2536-P5**	**159 000 760**	Polypro extended length low flow paddlewheel sensor

Ordering Notes

1) *See model 515 data sheet for sensor specifications.
2) **See model 2536 data sheet for sensor specifications.
3) Models 515 and 2536 Wet-Tap sensors are ordered separately.

3-2505 Sensor Electronics

Systems >>

The 2505-XX has the Signet 2537 paddlewheel sensor electronics, mounted in the universal junction box. Use to easily upgrade paddlewheel sensors in the field. The electronics module mounts directly onto the pipe or wall, and is compatible with all GF and third party open collector output sensors with signal levels of 5 to 24 volts and output frequency up to 1000 Hz.

Refer to the Signet Measurement and Control Product Catalog for additional information regarding the 2537 technical specifications.

SAP Material Number 150 301 005

3-2505-XX

Output Module Option	
1C	Pulse divider/flow switch/totalizer - Dry-contact relay
2C	Pulse divider/flow switch/totalizer - Solid state relay
5C	Digital (S^3L) Output
6C	4 to 20 mA Output

Example Part Number

3-2505-5C

Sensor Electronics in Universal Junction Box, Digital (S^3L) Output.

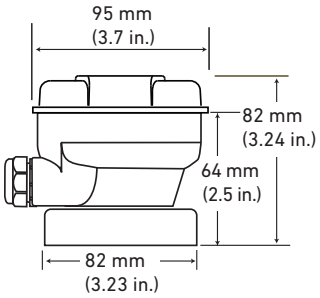

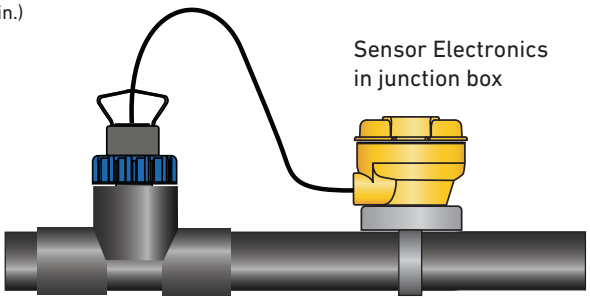

Compatible Signet Flow Sensors

2000	2100	2507	2536
2540	2551	2552	U1000

Special order products may not meet all of the specifications of the standard sensor assemblies.

Electrical			
Multi	With Dry-Contact Relay	24 VDC nominal, ±10%, regulated, 30 mA max current	
	With Solid-State Relay	6 V to 24 VDC, ±10%, regulated, 30 mA max current	
	Digital (S^3L)	5.0 VDC min to 6.5 VDC max., 30 mA max current (1.5 mA nominal)	
	4 to 20 mA	400 mV max ripple voltage, 30 mA max current	
	Maximum Pulse Rate	300 Hz	
	Maximum Pulse Width	50 ms	
	Minimum Pulse Rate	0.5 Hz	
	Compatible with PLC, PC or similar equipment		
	Compatible with customer supplied metering pump		
Digital (S^3L) Version		5 VDC nominal, regulated, 3 mA max current	
	Type	Serial ASCII, TTL level 9600 bps	
	Max. Cable Length	Refer to Signet 8900 wiring specifications.	
	Compatible with Model Signet 8900 Multi-Parameter Controller		
4 to 20 mA Version		12 to 32 VDC nominal, ±10%, regulated, 21 mA max current	
	Loop Accuracy	±32 µA @ 25 °C @ 24 VDC	
	Loop Resolution	5 µA	
	Temp. Drift	±1µA per °C max.	
	Power Supply Rejection	±1µA per V	
	Max. Cable	305 m	1000 ft
	Maximum Loop Resistance	600 Ω @ 24 VDC	1 KΩ @ 32 VDC
	Load Impedance	375 Ω	
Reverse Polarity and Short Circuit Protected		Up to 40 V, 1 hour	
Over-voltage Protection		> 40 VDC over 1 hour	
Relay Specifications			
	Mechanical SPDT	5 A @ 30 VDC, 5 A @ 250 VAC	
	Solid-State Relay	100 mA @ 40 VDC, 70 mA @ 33 VAC	
	Relay Modes	Low, High	
	Time Delay	0.0 to 6400.0 seconds	
	Hysteresis	Adjustable for exiting alarm condition	
Shipping Weight			
		0.64 kg	1.41 lb
Standards and Approvals			
		CE, UL, NSF and FCC	
		China RoHS, Made in USA from US and Imported Parts	
		Manufactured under ISO 9001 for Quality and ISO 14001 for Environmental Management and OHSAS 18001 for Occupational Health and Safety	

3-9900-2551-XX Magmeter Flow with 9900 Transmitter

Integral Systems >>

Signet has combined the 9900 SmartPro® Transmitter with the 2551 Magmeter Flow sensor to create integral systems that are easy to order and simple to install. Each integral system features a NEMA rated 4X/IP65 9900 Transmitter, which provides a local and easy to read LCD display. The push button keypad makes it easy to navigate through the transmitter's menu. The 9900 comes complete with a six pin, waterproof connector (cable not included) to apply 12/24 VDC power and access the passive, scalable 4 to 20 mA output and an open collector relay for process control and data logging.

The integral 9900 system is combined with Signet's field-proven 2551 Magmeter. These sensors reliably perform in flow ranges from 0.05 to 10 m/s (0.15 to 33 ft/s) for pipe sizes from DN15 to DN900 (½" to 36"). They are available in a variety of wetted materials including Polypropylene and PVDF with optional SS, Titanium or Hastelloy-C electrode material for maximum chemical compatibility. Electrodes are easily mounted in the pipe using Signet's comprehensive line of standard fittings.

SAP Material Number 150 301 005

3-9900-2551-XX

	Instrument + Sensor / Pipe Size / Sensor Body
P0	3-9900-1 w/3-2551-P0 / DN15 to DN100 (½ to 4 in.) / Polypropylene and 316L SS
T0	3-9900-1 w/3-2551-T0 / DN15 to DN100 (½ to 4 in.) / PVDF and Titanium
V0	3-9900-1 w/3-2551-V0 / DN15 to DN100 (½ to 4 in.) / PVDF and Hastelloy-C
P1	3-9900-1 w/3-2551-P1 / DN125 to DN200 (5 to 8 in.) / Polypropylene and 316L SS
T1	3-9900-1 w/3-2551-T1 / DN125 to DN200 (5 to 8 in.) / PVDF and Titanium
V1	3-9900-1 w/3-2551-V1 / DN125 to DN200 (5 to 8 in.) / PVDF and Hastelloy-C
P2	3-9900-1 w/3-2551-P2 / DN250 to DN900 (10 to 36 in.) / Polypropylene and 316L SS
T2	3-9900-1 w/3-2551-T2 / DN250 to DN900 (10 to 36 in.) / PVDF and Titanium
V2	3-9900-1 w/3-2551-V2 / DN250 to DN900 (10 to 36 in.) / PVDF and Hastelloy-C

Example Part Number

3-9900-2551-V0

3-9900-1 Transmitter with 3-2551-V0 Magmeter Flow Sensor, PVDF and Hastelloy-C body, for pipe size DN15 to DN100 (½ to 4 in.)

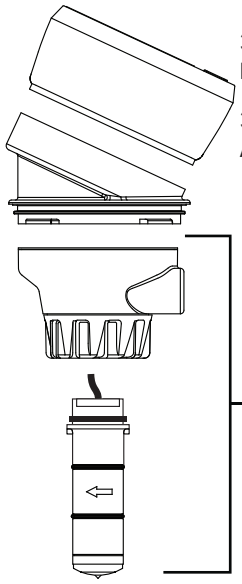

Pipe range:

½ to 4 in.	-X0 = 58 mm (2.3 in.)
5 to 8 in.	-X1 = 91 mm (3.6 in.)
10 to 36 in.	-X2 = 167 mm (6.6 in.)

Shipping Weight		
	1.10 kg	2.4 lb
Standards and Approvals		
	See individual product datasheet for approvals	

Special order products may not meet all of the specifications of the standard sensor assemblies.

Selecting a Location

- The 2551 requires a full pipe and a fully developed turbulent flow profile for accurate measurement.
- If the piping system harbors air pockets or bubbles, take steps to locate the sensor so the air pockets will not contact the electrodes.
- In vertical installations, assemble the 2551 so the conduit ports are facing downward. This prevents condensation inside the conduit from being directed into the 2551 electronics housing.
- Chemical injection systems can temporarily alter the fluid conductivity and cause anomalies in the magmeter measurement.
  To avoid this problem, install the magmeter UPSTREAM of the injection point.

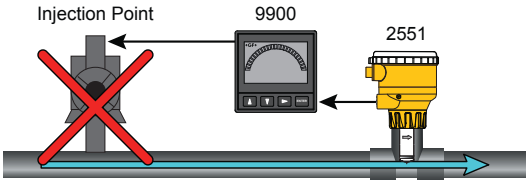

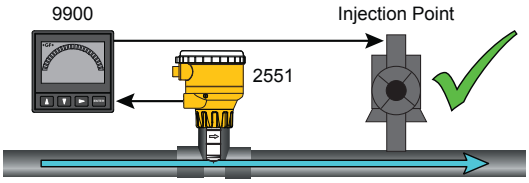

Location of Fitting

To ensure the fluid velocity profile is fully developed, without distortion from piping system components, please adhere to the recommended straight run geometry.

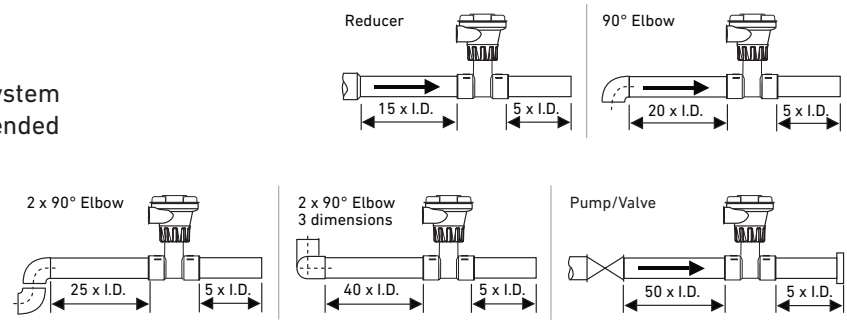

Sensor Mounting Position

Horizontal Pipe Runs: To minimize adverse effects of air pockets, or sediment, avoid mounting the flow sensor at top or pipe (0°), bottom of pipe (180°).

Vertical Pipe Runs: Mount flow sensor in any orientation. To ensure pipe is flowing full, with some back pressure, it's highly recommended the fluid flow is upward.

Gravity and Discharge Lines: It's recommended to install a trap to ensure pipe is full during flow conditions, and to minimize air pockets.

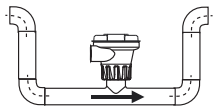

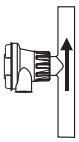

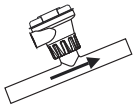

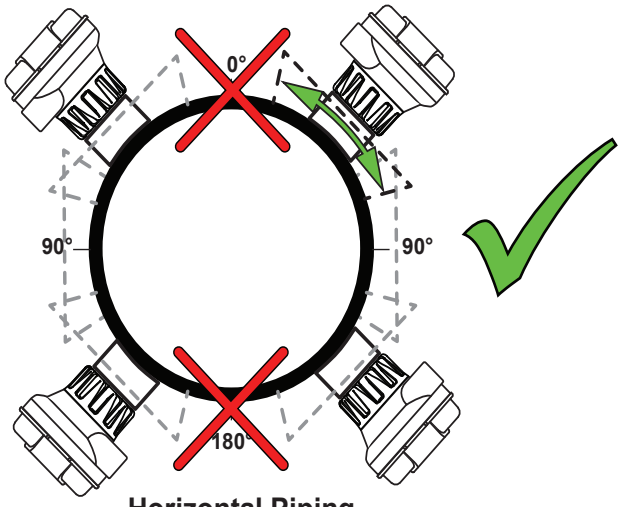

Horizontal Piping

5541-418-XX Special Cables for B Series 2552

Instruments /Misc. >>

Extended length cable for the 2552-"B"series Magmeter.
These molded waterproof cable assemblies can be ordered in different lengths to support long distance connections to the transmitter or data logging device. The removable connector allows the Magmeters to be easily removed from its location for servicing without having to remove the total length of cable from a conduit.

SAP Material Number 150 301 006

5541-418-XX

Cable Length	
7	7 m (23 ft)
8	8 m (26.25 ft)
9	9 m (29.5 ft)
10	10 m (32.8 ft)
15	15 m (49.25 ft)
16	16 m (52.5 ft)
25	25 m (82 ft)
30	30 m (98.5 ft)
31	31 m (101 ft)
33	33 m (108.25 ft)

Example Part Number
5541-418-7

2552-"B" Magmeter 4 pin Cable Assembly, 7 m (23 ft).

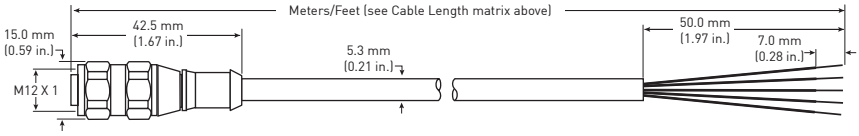

Shipping Weight	
	Contact factory

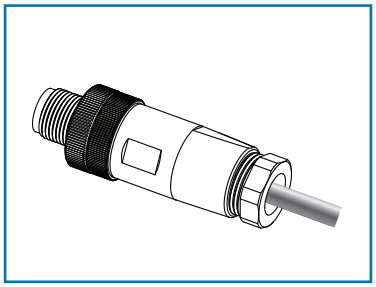

2552 water tight cable connectors allow the customer to make their own custom length cable assemblies.

These connectors can also be used to extend the length of the "A" type 2552 Magmeters by installing a female connector onto the standard cable assembly of the 2552-"A" Magmeter and produce an extended cable assembly with the male version of the connector.

5522-0422 Cable, #22 4 Cond 7/30 PVC JKT 25 feet.

3-2552.XXX

Connector	
397	Male Connector
398	Female Connector, 4 pin

Example Part Number
3-2552.398

Water tight cable connector, for the 3-2552 "B" version Magmeter, 4 pin Cable Assembly, female connector

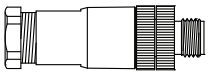

3-2552.398
Male connector

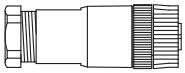

3-2552.397
Female connector

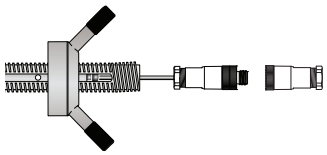

3-2552-XX-A-XX
Requires 1 male + 1 female plug to extend the cable of the "A" version

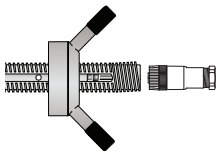

3-2552-XX-B-XX
Requires 1 female plug

Shipping Weight		
Cables	0.45 kg (approx.)	1.00 lb (approx.)
Connectors	0.11 kg	0.24 lb
Standards and Approvals		
	CE	

Special order products may not meet all of the specifications of the standard sensor assemblies.

3-2552-4X-XXS Special 2552 for Permanent Submersion

Flow >>

The Signet 2552 Submersible Metal Magmeter features a sensor manufactured in stainless steel with a PVDF nosepiece, waterproof cable assembly and CPVC waterproof back seal. The 2552 installs quickly into standard 1 in. ISO or NPT outlet and is adjustable to fit pipes up to 32 in.

The waterproof design allows the sensor to be installed in underwater piping systems at levels up to 4.6 m (15.09 ft).

Select the blind 4 to 20 mA current output to interface directly with data loggers, PLCs or telemetry systems. Key features include empty pipe detection and bidirectional span capability (4 to 20 mA models).

SAP Material Number 150 301 001

3-2552-4X-XXS

Process Connector		
1	1 in. NPT	
2	1 in. ISO	
-	**Output Type**	
	11S	Digital (S^3L)/Freq. Output
	12S	4 to 20 mA Output

Example Part Number

3-2552-41-11S

Submersible Magmeter, 1 in. NPT process connection, Submersible sensor with frequency output and 25 feet of cable.

Extended cables available.

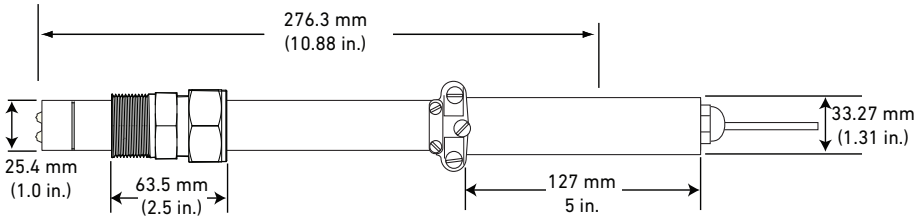

The Signet 0252 Configuration Tool is available to customize every performance feature in the 2552 so it can be adapted to the user's application requirements.

WARNING:
BE CAREFUL INSTALLING THE SENSOR. ONCE THE PROCESS CONNECTOR IS PROPERLY TIGHTENED THE SENSOR CAN NOT BE DISASSEMBLED AND REINSTALLED.

Wetted Materials:		
Body and Electrodes	316L Stainless Steel	
Insulator	PVDF	
Cable	4-cond, rubber cable assembly with NEMA 6P connector, 25 ft standard, custom length available	
Power Requirements		
4 to 20 mA	21.6 to 26.4 VDC, 22.1 mA maximum	
Frequency	4.5 to 26.4 VDC, 15 mA maximum	
Digital (S^3L)	4.5 to 6.5 VDC, 15 mA maximum	
Reverse polarity and short circuit protected		
Performance		
Pipe Size Range	DN40 to DN1200 (1.5 in. to 48 in.)	
Flow Range		
Minimum	0.05 m/s (0.15 ft/s)	
Maximum	10 m/s (33 ft/s) Sensor ships 5 m/s	
Linearity	±(1% reading + 0.01 m/s)	
	±(1% reading + 0.033 ft/s)	
Repeatability	±0.5% of reading @ 25°C	
Min. Conductivity	20 µS/cm	
Electrical		
Frequency output/S^3L compatible with Signet 8900, 9900 and 9950		
Max. Pull-up Voltage	30 VDC	

Short Circuit Protected	≤ 30 V @ 0 Ω pull-up for one hour	
Reverse Polarity Protected	to -40 V for 1 hour	
Overvoltage Protected	to +40 V for 1 hour	
Max. Current Sink	50 mA, current limited	
Maximum cable	305 m (1000 ft)	
Max. Temperature/Pressure Rating		
Storage Temp. (non-icing conditions)	-15 °C to 70 °C	5 °F to 158 °F
Operating Temperature		
Ambient Temp. (non-icing conditions)	-15 °C to 70 °C	5 °F to 158 °F
Media	-15 °C to 85 °C	5 °F to 185 °F
Max. Operating Pressure	20.7 bar @ 25 °C	300 psi @ 77 °F
Shipping Weight		
	2.50 kg	5.51 lb
Standards and Approvals		
CE, FCC, RoHS Compliant, China RoHS		
NEMA 6P (IP68) (submersible cable models) Signet recommends maximum 3 m (10 ft) submersion depth for maximum 10 days continuous submersion.		
Manufactured under ISO 9001 for Quality, ISO 14001 for Environmental Management and OHSAS 18001 for Occupational Health and Safety.		

Special order products may not meet all of the specifications of the standard sensor assemblies.

Signet Flow Instrument

	D100	9950	9900
Description	DeviceLink™ Network	Multi-Channel (2 Channel), Multi-Parameter Controller	Single-Channel, Multi-Parameter Transmitter
Modular Components		Yes	
Number of Flow Totalizers	1 Permanent, 1 Resettable per channel of Flow input	2 Permanent 2 Resettable	1 Permanent 1 Resettable
Max. Sensor Inputs	Up to 12 channels, programmable for Digital (S^3L), frequency or 4 to 20 mA input, depending on package selected and two Modbus via 9900 or 9950	2 frequency or S^3L inputs	1
Mounting Options	Panel	Panel	Panel, Wall, Pipe, Tank
Display	7 in. LCD touch screen or web browser, PC, smartphone, or tablet	LCD, Dot matrix	LCD with digital bar graph
Analog Output Types	Up to 4 passive 4 to 20 mA loop outputs	(2) Passive 4 to 20 mA Outputs, Standard Up to (6) via optional modules (optional relay module)	(2) Passive 4 to 20 mA (1) Standard, (1) Optional with 4 to 20 mA Output module HART optional with H COMM module
Max. Relays	Up to 4 Dry-Contact, programmable relay	(4) Dry-Contact Relays or (2) Mechanical and (2) Solid State Relays (optional relay module)	(1) open collector (standard) (2) relays (optional relay module)
Derived Measurements	N/A	6 Derived Measurements Sum, Delta (Difference), Ratio, % Passage, % Reject, % Recovery	N/A
Languages	English	English, French, German, Spanish and Simplified Chinese	English
Ambient Temperature (°C) **Storage Temperature (°F)**	AC -10 °C to 50 °C (14 °F to 122 °F) DC -10 °C to 60 °C (14 °F to 140 °F) Display Models: -10 °C to 60 °C (14 °F to 140 °F) Storage Temp: -15 °C to 70 °C (5 °F to 158 °F)	DC -10 °C to 70 °C (14 °F to 158 °F) AC -10 °C to 60 °C (14 °F to 140 °F) -15 °C to 70 °C (5 °F to 158 °F)	-10 °C to 70 °C (14 °F to 158 °F) -15 °C to 70 °C (5 °F to 158 °F)
Relative Humidity	0 to 99% condensing environment	0 to 95%, non-condensing	
Power Requirements	DC - 24 VDC nominal (10.8 to 35.2 VDC regulated) 500 mA maximum AC - 100-240 VAC, ±10%, regulated 50-60 Hz, 24 VA max	DC - 24 VDC nominal (12 to 32 VDC, ±10% regulated) AC - 100 to 240 VAC, 50 to 60 Hz, 24 VA	24 VDC input; range: (10.8 to 35.2 VDC regulated)
Standards and Approvals	CE, UL, CUL, FCC, RoHS Compliant, China RoHS, NEMA 4X/IP65	CE, FCC, UL, CUL, RoHS compliant, China RoHS, NEMA TYPE 4X/IP65 (front face only on panel mount)	CE, FCC, UL, CUL, RoHS compliant, Lloyd's Register, China RoHS, NEMA TYPE 4X/IP65 (front face only on panel mount); field mount is 100% NEMA TYPE 4X/IP65

Specification Matrix

9900-1BC	8900	8150
Single-Channel, Single Parameter Controller	Multi-Channel (4 or 6 Channel), Multi-Parameter Controller	Battery Powered Flow Totalizer
Yes		No
1 Permanent 1 Resettable	6 Permanent 6 Resettable	1 Permanent 2 Resettable
1	(up to 2 frequency and 4 (S^3L) or 6 (S^3L) 6 total sensor inputs	1
Panel, Wall, Pipe, Tank installation using rear enclosure	Panel	Panel, Wall, Pipe, Tank, Integral
LCD with digital bar graph	LCD	
(1) Passive 4 to 20 mA	(4) Passive/Active 4 to 20 mA or (2) 0 to 5/10 VDC	None
(1) open collector (2) relays	up to 8 relays (via 8059)	None
N/A	Sum, Difference, % Recovery, % Reject, % Passage, Ratio, Power (BTU)	None
English	English, French, German, Spanish, Italian, and Portuguese	English
-10 °C to 70 °C (14 °F to 158 °F) -15 °C to 70 °C (5 °F to 158 °F)	-10 °C to 55 °C (14 °F to 131 °F) -15 °C to 80 °C (5 °F to 176 °F)	-10 °C to 65 °C 14 °F to 149 °F
0 to 95%, non-condensing		
24 VDC input; range: 10.8 to 35.2 VDC regulated	12 to 24 VDC ±10%, regulated or 100 to 240 VAC ±10%, regulated, 50/60 Hz	(2) 3.6 V Lithium Batteries
CE, UL, CUL, FCC, RoHS compliant, China RoHS, NEMA TYPE 4X/IP65 (front face only)	CE, FCC, UL, CUL, RoHS compliant, China RoHS NEMA 4X/IP65 (front face only)	CE, FCC, UL, CUL, RoHS compliant, China RoHS, NEMA 4X/IP65 (front face only on panel mount); field mount is 100% NEMA 4X/IP65

Signet 9900 Transmitter

Member of the SmartPro® Family of Instruments

Panel Mount Field Mount

The Signet 9900 Transmitter provides a single channel interface for many different parameters including Flow, pH/ORP, Conductivity/Resistivity, Salinity, Pressure, Temperature, Level, Dissolved Oxygen, and other sensors that output a 4 to 20 mA signal. The 9900-1P Transmitter can also be used as a Batch Controller when a Batch Module and Relay Module are installed.

The 9900 is offered in both panel or field mount versions. Both configurations offer an extra large (3.90" x 3.90") auto-sensing backlit display features "at-a-glance" visibility that can be viewed at 4-5 times the distance over traditional transmitters. The highly illuminated display and large characters reduce the risk of misreading or misinterpreting the displayed values. The display shows separate lines for units, main and secondary measurements as well as a "dial-type" digital bar graph.

The 9900 can run on 12 to 32 VDC power (24 VDC nominal), and can also be loop powered with compatible sensors.

Rear Enclosure kits are available for the 9900-1P Panel Mount. Kit options include either a Hinged Cover (3-9900.399-1) for wall or pipe mount installations, or a Flat Cover (3-9900.399-2) designed to fit inside a panel for waterproof protection.

The 9900 offers complete flexibility, plug-in modules allow the unit to easily adapt to meet changing customer needs. Optional modules include the new Modbus as well as the Relay, Direct Conductivity/Resistivity, H COMM, Batch, 4 to 20 mA Output, and a PC COMM Configuration Tool. The unit can be used with default values for quick and easy programming or can be customized with labeling, adjustable minimum and maximum dial settings, and unit of measure and decimal location choices.

Features

- **Modbus Module supports RS485 Serial Modbus Communications**
- **Multiple sensor types supported with one instrument**
- **"Dial-type" digital bar graph**
- **Modules are field installable and replaceable anytime**
- **Optional Relay Module for addition of two dry contact relays**
- **Optional H COMM Module for two-way communication**
- **Optional Batch Module for Batch Control**
- **Modbus Module for connection to Serial, RS485, Modbus networks and Signet D100**
- **One 4 to 20 mA output in base unit. One additional 4 to 20 mA available with optional module**
- **Rear Enclosure kits for panel, wall or pipe mounting**
- **Warning and Relay LED indicators for "at a glance" visibility**
- **Customizable features including digital label for custom identification**
- **Optional PC COMM configuration tool for configuration at a PC**

Applications

- **Wastewater Treatment**
- **Reverse Osmosis**
- **Deionization**
  - **Ultra Pure Water**
  - **Two Bed System**
  - **Mixed Bed System**
- **Chemical Manufacturing/Addition**
- **Metal and Plastic Finishing**
- **Fume Scrubber**
- **Cooling Towers**
- **Media Filtration**

U.S. Patent Nos.: D662,844 S, D622,845 S
Taiwan Patent Nos.: D147,149, D147,150

Ordering Information

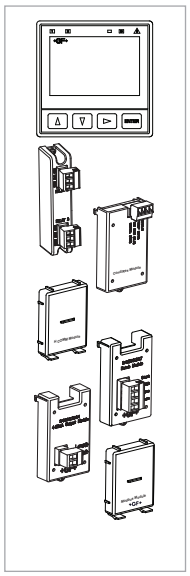

Mfr. Part No	Code	Description
9900 Base Unit - Single Channel, Multi-Parameter, 4 to 20 mA, Open Collector, DC power		
3-9900-1P	**159 001 695**	9900 Panel Mount Transmitter
3-9900-1	**159 001 696**	9900 Field Mount Transmitter
3-9900-1BC	**159 001 770**	Batch Controller System
Optional Accessory Modules		
3-9900.270-M2	**159 200 121**	Modbus Module with Terminal Block Assembly (Panel Mount Only)
3-9900.270-M3	**159 200 122**	Modbus Module with M12 Connector Assembly (Field Mount Only)
3-9900.270-M4	**159 200 128**	Modbus Module with 5 Wire Cable Assembly
3-9900.393	**159 001 698**	Relay Module - 2 DCR (Dry-contact relays)
3-9900.394	**159 001 699**	Direct Conductivity/Resistivity Module
3-9900.395	**159 001 697**	H COMM Module
3-9900.397	**159 310 163**	Batch Module
3-9900.398-1	**159 001 784**	4 to 20 mA Output Module*

*Module adds a second 4 to 20 mA output. One 4 to 20 mA output is included in the base unit.

Accessories and Replacement Parts

Mfr. Part No	Code	Description
6682-0204	**159 001 709**	Conductivity Module Plug, 4 Pos, Right Angle
6682-1102	**159 001 710**	DC Power Plug, 2 Pos, Right Angle
6682-1103	**159 001 711**	Relay Module Plug, 3 Pos, Right Angle
6682-1104	**159 001 712**	Loop Power Plug, 4 Pos, Right Angle
6682-3104	**159 001 713**	Freq/S^3L Plug, 4 Pos, Right Angle
6682-3004	**159 001 725**	Terminal Block Plug
7310-1024	**159 873 004**	24 VDC Power Supply, 0.42 A, 10W
7310-2024	**159 873 005**	24 VDC Power Supply, 1.0 A , 24W
7310-4024	**159 873 006**	24 VDC Power Supply, 1.7 A, 40W
7310-6024	**159 873 007**	24 VDC Power Supply, 2.5 A, 60W
7310-7024	**159 873 008**	24 VDC Power Supply, 4.0 A, 96W
3-0252	**159 001 808**	0252 Configuration Tool
3-8050	**159 000 184**	Universal Mount Kit
3-8050.396	**159 000 617**	RC Filter Kit (for relay use), 2 per kit
3-8051	**159 000 187**	Flow Sensor Integral Mounting Kit, NPT, Valox
3-8051-1	**159 001 755**	Flow Sensor Integral Mounting Kit, NPT, PP
3-8051-2	**159 001 756**	Flow Sensor Integral Mounting Kit, NPT, PVDF
3-8052	**159 000 188**	¾ in. Integral Mount Kit
3-8058-1	**159 000 966**	I-Go® Signal Converter, wire-mount
3-8058-2	**159 000 967**	I-Go® Signal Converter, DIN rail mount
3-9000.392-1	**159 000 839**	Liquid Tight Connector Kit, NPT (1 pc.)
3-9900.270-CB1	**159 200 123**	Replacement Wire Cable Assembly for M1
3-9900.270-CB2	**159 200 124**	Replacement Terminal Block Assembly for M2
3-9900.270-CB3	**159 200 125**	Replacement M12 Connector Assembly for M3
3-9900.270-CB4	**159 200 129**	Replacement Cable Assembly for M4
3-9900.390	**159 001 714**	Standard Connector Kit, Right Angle, 9900 Transmitter
5541-5005	**159 855 021**	5 meter (16 ft) M12 cable
5541-5010	**159 855 022**	10 meter (32 ft) M12 cable
3-9900.391	**159 001 715**	Optional Connector Kit, In-Line, 9900 Transmitter
3-9900.392	**159 001 700**	Wall Mount Accessory Kit for 9900
3-9900.396	**159 001 701**	Angle Adjustment Adapter Kit (for Field Mounting)
3-9900.399-1	**159 001 834**	Rear enclosure kit, hinged cover
3-9900.399-2	**159 001 835**	Rear enclosure kit, flat cover

Signet 9900-1BC Batch Controller System

Member of the SmartPro® Family of Instruments

The Signet 9900-1BC Batch Controller system provides control capability and process fine-tuning in a familiar package. The programming interface uses a four-button keypad and an intuitive menu for adjusting a batching system to the best performance possible. Choose between simple or advanced modes. In simple mode, relay outputs can be used for batching, external counter, missing signal alarm and 4 to 20 mA output can be used to indicate batch status. In advanced mode relays can also be used for end of batch pulse, two-stage shutdown, overrun alarm, high flow detection, total volume or source volume alarm.

New to Generation IV, Automatic Overrun Compensation feature. The 9900-1BC can measure excess flow after a batch stops and use it to reduce flow to the next batch by de-energizing the batch relay early, thus closing the flow control valve, and eliminating batch overrun.

Designed for a variety of batch applications, the 9900-1BC can save up to 10 batch sizes for batching or blending a variety of liquid volumes. Customize batch names for easy distinction between batches. One K-Factor can be used for all batches, or use a different K-Factor for each batch for when different liquids are batched. User can choose to be prompted prior to starting a batch with a Yes/No or with a password to prevent inadvertently starting a batch.

The 9900-1BC operates on 10.8 to 35.2 VDC, regulated. Connect a remote start or stop switch for remote batch control. Use the end-of-batch pulse to trigger the next step in the process.

Features

- **Rear Enclosure option means the 9900-1BC Batch Controller can be installed on a pipe or wall mounted in addition to panel mount installations**
- **Store up to 10 batch sizes for batching or blending a variety of liquid volumes**
- **Customize 10 batch names for easy distinction between batches**
- **Modular Design - Can be purchased as a complete system or add a Batch Module and Relay Module to an existing 9900 Transmitter (Generation II or later)**
- **Automatic Overrun Compensation can eliminate excess flow by automatically reducing the next batch size by the overrun value of previous batch.**
- **Remote control wiring with start, stop & resume terminals for remote batch control**
- **3 programmable relays, one open collector, two dry-contact relays**
- **Two-stage control to prevent overfilling or to minimize water hammer**
- **Confirmation START/RESUME – Can prompt user prior to starting each batch with a Yes/No or password to prevent inadvertently starting a batch**
- **Enter 10 different K-Factors - one per batch for when different liquids are batched**

LISTED
MEASURING EQUIPMENT
77CJ

Applications

- **Batch Process**
- **Filter Backwash Initiation**
- **Chemical Addition**
- **Canning and Bottling**
- **Tank Filling**
- **Bulk Storage Transfer**
- **Chemical Processing**
- **Food and Beverage**
- **Life Sciences**
- **Water Treatment**

U.S. Patent No.: D662,844 S
Taiwan Patent No.: D147,150

Ordering Information

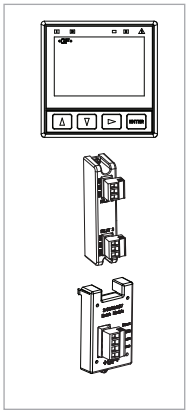

Mfr. Part No.	Code	Description
3-9900-1BC	**159 001 770**	Batch Controller System
3-9900-1P	**159 001 695**	9900 Panel Mount Transmitter
3-9900.393	**159 001 698**	Relay Module - 2 DCR (dry-contact relays)
3-9900.397	**159 310 163**	Batch Module

Accessories and Replacement Parts

Mfr. Part No	Code	Description
6682-1102	**159 001 710**	DC Power Plug, 2 Pos, Right Angle
6682-1103	**159 001 711**	Relay Module Plug, 3 Pos, Right Angle
6682-1104	**159 001 712**	Loop Power Plug, 4 Pos, Right Angle
6682-3004	**159 001 725**	Freq/S^3L Plug, 4 Pos, In-line
6682-3104	**159 001 713**	Freq/S^3L Plug, 4 Pos, Right Angle
7310-1024	**159 873 004**	24 VDC Power Supply, 10W, 0.42 A
7310-2024	**159 873 005**	24 VDC Power Supply, 24W, 1.0 A
7310-4024	**159 873 006**	24 VDC Power Supply, 40W, 1.7 A
7310-6024	**159 873 007**	24 VDC Power Supply, 60W, 2.5 A
7310-7024	**159 873 008**	24 VDC Power Supply, 96W, 4.0 A
3-8050.396	**159 000 617**	RC Filter Kit (for relay use), 2 per kit with inductive loads
3-9900.390	**159 001 714**	Standard Connector Kit, Right Angle
3-9900.391	**159 001 715**	Connector Kit, In-Line
3-9900.392	**150 300 351**	Wall Mount Accessory Kit for 9900
3-9000.392-1	**159 000 839**	Liquid Tight Connector Kit, NPT (1 pc.)
1223-0151	**159 000 236**	O-ring EPR (EPDM) -151 .103W 2.987ID
3-9900.399-1	**159 001 834**	Rear Enclosure, hinged cover
3-9900.399-2	**159 001 835**	Rear Enclosure, flat cover
3-0252	**159 001 808**	Configuration Tool

Signet 8900 Multi-Parameter Controller

Member of the ProcessPro® Family of Instruments

The Signet 8900 Multi-Parameter Controller takes the concept of modularity to the extreme. Each 8900 is field commissioned with the users specified combination of inputs, outputs, and relays using simple-to-install modular boards into the base unit. Configure the system by selecting either four, or six input channels which accepts any of the Signet sensors listed below, and/or other manufacturer's sensors via a 4 to 20 mA signal converter (Signet Model 8058). To complete your unit, choose a power module with universal AC line voltage or 12 to 24 VDC ±10%, regulated.

If more features are needed, analog output and relay modules are available and easily installed. Plus, the 8900 will support four additional relays via an external relay module. There are other notable features that the 8900 offers. For instance, digital input to the 8900 enables longer cable runs and simplified wiring with minimal noise interference. Advanced relay logic allows users to select up to 3 measurement sources to trigger 1 relay. Derived measurements include difference, sum, ratio, percent recovery, percent rejection, percent passage and BTU. The menu system can be programmed to display in multi-languages including English, German, French, Spanish, Italian, and Portuguese.

Features

- **Measures Flow, pH, ORP, Conductivity, Pressure, Level and Temperature**
- **Multi-language display**
- **¼ DIN enclosure**
- **Up to 4 analog outputs**
- **Up to 8 relays**
- **12 to 24 VDC or 100 to 240 VAC ±10%, regulated power**
- **Digital communication allows for extended cable lengths and easy wiring**
- **Accepts 3rd party 4 to 20 mA output devices when used with 8058 signal converter**
- **Available with 4 or 6 channels**
- **Simultaneous BTU Calculations with Heating & Cooling Totalizers per calculation**

Applications

- **RO/DI System Control**
- **Media Filtration**
- **Pure Water Production**
- **Demineralizers**
- **Chemical Processing**
- **Metal & Plastics Finishing**
- **Fume Scrubbers**
- **Proportional Chemical Addition**
- **Cooling Tower & Boiler Protection**
- **Wastewater Treatment**
- **Aquatic Animal Life Support Systems**
- **Plating Rinse Tanks**

Ordering Information

To build a functional 8900 controller, choose the base unit, power module, and input/output (I/O) module. Additional outputs and relays are available, if needed.

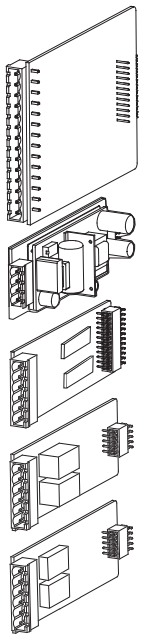

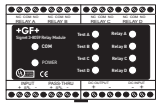

Base Units, Required		
3-8900	**159 000 868**	Base unit with back-lit LCD
I/O (input/output) Modules, Required; Choose One		
3-8900.401-5	**159 000 874**	Quad (4) Input (no outputs)
3-8900.401-6	**159 000 875**	Quad (4) Input with (2) Passive* Loop Outputs
3-8900.401-7	**159 000 876**	Quad (4) Input with (2) Active Loop Outputs
3-8900.401-8	**159 000 877**	Quad (4) Input with (2) Voltage Outputs
3-8900.401-9	**159 000 968**	(6) Inputs (no outputs)
3-8900.401-11	**159 000 970**	(6) Inputs with (2) Active Loop Outputs
Power Modules, Required; Choose One		
3-8900.402-1	**159 000 878**	110/220 VAC Power Module, ±10%, regulated
3-8900.402-2	**159 000 879**	12 to 24 VDC Power Module, ±10%, regulated
Optional Output Modules - Choose One		
3-8900.405-1	**159 000 883**	(2) Passive* Current Loop Outputs
3-8900.405-2	**159 000 884**	(2) Active Current Loop Outputs
Optional Relay Modules - Choose One or Two		
3-8900.403-1	**159 000 880**	(2) Dry-contact relays
3-8900.403-2	**159 000 881**	(2) Solid state relays
Optional External Relays - Choose One**		
3-8059-4	**159 000 772**	(4) dry-contact relays; requires 12 to 24 VDC ±10%, regulated
3-8059-4AC	**159 000 773**	(4) dry-contact relays; requires 100 to 240 VAC ±10%, regulated; supplies power to the 12 to 24 VDC ±10%, regulated power host device

* Passive outputs require an external power source

** See individual product page for the 8059 External Relay Modules.

Accessories and Replacement Parts

Mfr. Part No.	Code	Description
Mounting		
3-8050.392	**159 000 640**	¼ DIN retrofit adapter
3-8050.395	**159 000 186**	Splashproof rear cover
3-0000.596-1	**159 000 892**	¼ DIN wall mount bracket, 6½ in. (use if no rear cover is installed)
3-0000.596-2	**159 000 893**	¼ DIN wall mount bracket, 9 in. (use if rear cover is installed)
3-5000.399	**198 840 224**	Panel adapter, 5 x 5 in. to ¼ DIN
3-5000.598	**198 840 225**	Surface mount bracket
3-9900.396	**159 001 701**	Angle adjustment adapter kit
Power Supplies		
7310-1024	**159 873 004**	24 VDC Power Supply, 10W, 0.42 A
7310-2024	**159 873 005**	24 VDC Power Supply, 24W, 1.0 A
7310-4024	**159 873 006**	24 VDC Power Supply, 40W, 1.7 A
7310-6024	**159 873 007**	24 VDC Power Supply, 60W, 2.5 A
7310-7024	**159 873 008**	24 VDC Power Supply, 96W, 4.0 A
Miscellaneous		
3-8050.396	**159 000 617**	RC filter kit (for relay use), 2 per kit with inductive loads

Signet 8150 Battery Powered Flow Totalizer

Member of the ProcessPro® Family of Instruments

Panel Mount

Pipe, Wall, and Tank Mount

Integral Mount

The Signet 8150 Battery Powered Flow Totalizer is compatible with the Signet 515 and 525 flow sensors, and will provide years of dependable operation. The large digital display indicates flow rate and totalized flow volume simultaneously. One of the three totalizers is resettable from the front panel or a remote location, while the second resettable totalizer can only be reset by entering a user-selectable security code. The third is a permanent non-resettable totalizer.

Our intuitive software design and four-button keypad provide for simple operation while setting screen displays and programming the system. Calibration can be easily performed by entering the AutoCal feature and entering a value to match an external reference. Screen displays can be modified to suit the user's needs; along with the flow rate, any of the three totalizers can be selected as the displayed totalizer. Users can quickly scroll through the totalizers simply by pressing any key on the keypad. A display averaging feature is included for applications where the flow in the pipe fluctuates. For applications where flow stops and starts due to production needs, a no-flow indicator will display the hours of non-flow.

Features

- **Three totalizers: 2 resettable and 1 permanent, user-selectable**
- **Long-lasting lithium batteries**
- **Mounting versatility**
- **No-flow indicator**
- **Large digital display with averaging**
- **Simple push-button operation**
- **User-selectable access code prevents unwanted changes**
- **Auto-calibration**

LISTED
MEASURING EQUIPMENT
77CJ

Applications

- **Wastewater Flow Accumulation**
- **Water Treatment Systems**
- **Remote or Mobile Treatment/ Distribution Systems**
- **Irrigation Systems**
- **Filtration Systems**
- **Commercial Pools & Spas**
- **Groundwater Remediation**
- **R.O. Concentrate**
- **Process Flow Monitoring**
- **UPW Distribution**
- **Demineralizer Regeneration**
- **Process Cooling Water**

Specifications

General		
Compatibility	Signet 515 and 525 flow sensors	
Input Freq. Range	0 to 400 Hz	
Accuracy	±0.5% of reading	
Display	LCD type	
	4-digit upper line - flow rate	
	8-digit lower line - volume totalizer count, either resettable or permanent	
Averaging	0 to 120 secs.	
Contrast	Automatic	
Low Battery Indication	Battery symbol appears on LCD display	
8-digit Resettable Totalizers	Stored until user resets; continues to be stored even after batteries are removed	
8-digit Permanent	Kept permanently, even when batteries are removed	
Materials		
Enclosure	PBT resin	
Keypad	Sealed 4-key silicon rubber	
Panel and Case Gasket	Neoprene	
Window	Polyurethane coated polycarbonate	
Electrical		
Battery	Two 3.6 V Lithium thionyl chloride, AA-size	
Battery Life	4 years nominal @ 50 °C (122 °F)	
Environmental		
Operating Temperature	-10 °C to 65 °C	14 °F to 149 °F
	-40 °C to 100 °C	-40 °F to 212 °F
Relative Humidity	0 to 95%, non-condensing	
Enclosure	NEMA 4X/IP65 (front face only on panel mount); field mount is 100% NEMA 4X/IP65	
Shipping Weight		
	0.5 kg	1.1 lb
Standards and Approvals		
	CE, FCC, UL, CUL	
	RoHS compliant, China RoHS, Made in USA from US and Imported Parts	
	Manufactured under ISO 9001 for Quality and ISO 14001 for Environmental Management and OHSAS 18001 for Occupational Health and Safety	

Dimensions

3-8150-1P

Panel Mount

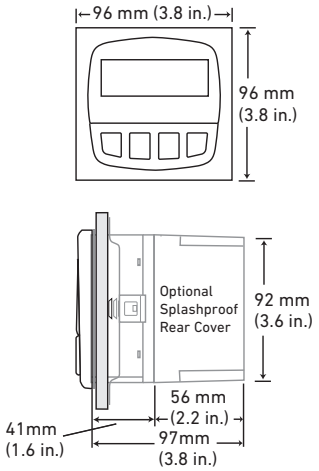

3-8150-1 with Universal Mount

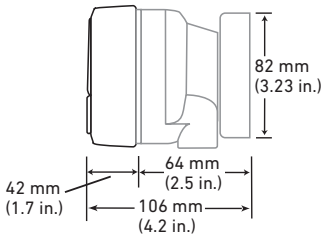

Model 515 Integral Mount Sensors - see 515 data sheet for specifications

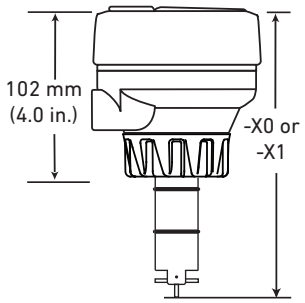

-X0 = 152 mm (6.0 in.)
-X1 = 185 mm (7.3 in.)

System Overview

Panel Mount	Pipe, Tank, Wall Mount
Signet 8150 Flow Totalizer includes mounting bracket and panel gasket 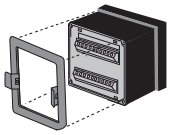 	**Signet 8150 Flow Totalizer** with 3-8050 Universal Mount Kit 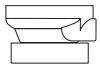 + 

Signet Sensors
515 525

Signet Fittings

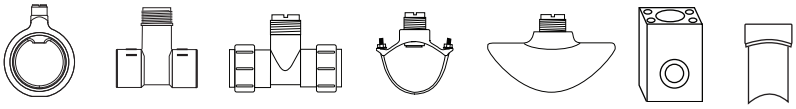

All sold separately

Ordering Notes

1) For panel version, cutout must be 92 x 92 mm (3.62 x 3.62 in.)
2) To mount the panel version on a wall, use the heavy duty wall mount bracket.
3) Use the Universal mounting kit with the Field mount instrument to mount to a pipe, tank or wall.
4) An optional splashproof rear cover can be ordered separately if needed.

Please refer to Wiring, Installation, and Accessories sections for more information.

Ordering Information

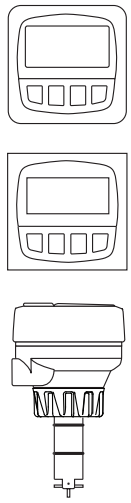

Mfr. Part No.	Code	Mounting Notes
Battery Operated Flow Totalizer		
Field Mount (yellow body)		
3-8150-1	**159 000 929**	Field mount for pipe, tank, and wall mounting
Panel Mount (black body)		
3-8150-1P	**159 000 930**	Panel mount; includes mounting bracket and panel gasket
Integral Mount		
for ½ to 4 in. pipes		
3-8150-P0*	**159 000 931**	Mounted on Model 515 Paddlewheel (Part No. 3-8510-P0), w/Polypropylene body, black Polypropylene retaining nut, Black PVDF rotor, and Titanium pin
3-8150-T0*	**159 001 011**	Mounted on Model 515 Paddlewheel (Part No. 3-8510-T0), with a natural PVDF body, natural PVDF retaining nut, rotor, and pin
for 5 to 8 in. pipes		
3-8150-P1*	**159 000 932**	Mounted on Model 515 Paddlewheel (Part No. 3-8510-P1), w/Polypropylene body, Black PVDF rotor, and Titanium pin

* See individual sensor sheets for more sensor information.

Accessories and Replacement Parts

Mfr. Part No.	Code	Description
Mounting		
3-8050	**159 000 184**	Universal mounting kit
3-8050.390-1	**159 001 702**	Retaining nut replacement kit, NPT, Valox
3-8050.390-3	**159 310 116**	Retaining nut replacement kit, NPT, PP
3-8050.390-4	**159 310 117**	Retaining nut replacement kit, NPT, PVDF
3-0000.596	**159 000 641**	Heavy duty wall mount bracket (panel mount only)
3-5000.399	**198 840 224**	Panel adapter, 5 x 5 in. to ¼ DIN
3-5000.598	**198 840 225**	Surface mount bracket (panel mount only)
3-8050.395	**159 000 186**	Splashproof rear cover (panel mount only)
3-9900.396	**159 001 701**	Angle adjustment adapter kit
Liquid Tight Connectors		
3-9000.392	**159 000 368**	Liquid tight connector kit (includes 3 connectors)
3-9000.392-1	**159 000 839**	Liquid tight connector, NPT (1 connector)
3-9000.392-2	**159 000 841**	Liquid tight connector, PG 13.5 (1 connector)
Other		
7400-0011	**159 000 935**	Lithium battery, 3.6 V, size AA (2 required)
5523-0222	**159 000 392**	Cable (per foot), 2 cond. w/shield, 22 AWG
Replacement Parts for Integral Mount Units - see Model 515 catalog pages for information		
3-8051	**159 000 187**	Flow integral mounting kit, NPT, Valox
3-8051-1	**159 001 755**	Flow Sensor integral mounting kit, NPT, PP
3-8051-2	**159 001 756**	Flow Sensor integral mounting kit, NPT, PVDF
3-8510-P0	**198 864 504**	Sensor for ½ to 4 in. pipes, Polypropylene body
3-8510-PI	**198 864 505**	Sensor for 5 to 8 in. pipes, Polypropylene body
3-8510-T0	**159 000 622**	Sensor for ½ to 4 in. pipes, all natural PVDF
3-8510-V0	**198 864 506**	Sensor for ½ to 4 in. pipes, PVDF body

Signet pH/ORP Electrode Specification Matrix




		2756 Wet-Tap	2757 Wet-Tap	2724 2726	2725
Operation Range		0 to 14 pH	± 2000 mV	0 to 14 pH	±2,000 mV
Connector Style		DryLoc®			
Compatible Preamps/Sensor Electronics		2751 Sensor Electronics and 2760 Sensor Preamplifiers			
Temperature Range		0 °C to 85 °C (32 °F to 185 °F)		-10 °C to 85 °C (14 °F to 185 °F)	
Pressure Range		6.89 bar (100 psi)		6.8 bar @ -10 to 65 °C (100 psi @ 14 to 150 °F) 4 bar @ 65 to 85 °C (58 psi @ 150 to 185 °F)	
Pipe Size Range for In-line		2½ in. to 12 in.		2724-2727 pipe size range ½ in. to 4 in. Signet fittings or a variety of ¾ in. fittings	
Process Connection for Submersible		N/A		¾ in. NPT threads or ISO 7-1/R 3/4 in. (using threads from submersible 2751, or 2760)	
Wetted Materials	**Body**	Plastic		Ryton® (PPS)	
	Reference Junction Material	PTFE		Porous UHMW Polyethylene	
	O-rings	FKM			
	Sensing Element	Glass (pH) or Platinum (ORP)			
Mounting Position		Any angle, even upside down			
Sensor Technology		Standard			
Compatible Signet Instruments		8900, 9900, 9950			
Application Usage		General purpose; sensor accessible without process shutdown		General purpose; also options available for use in HF (<2%) and low conductivity liquids (<100 µS)	
Standards and Approvals		Manufactured under ISO 9001 for Quality		RoHS compliant, China RoHS	

2734 2736	2735	2764 2766	2765 2767	2774 2776	2775 2777
0 to 14 pH	±2,000 mV	0 to 14 pH	±1,500 mV	0 to 14 pH	±2,000 mV
DryLoc®		DryLoc®			
2751 Sensor Electronics (for 8900, 9900, 4 to 20 mA)		2751 Sensor Electronics and 2760 Sensor Preamplifiers			
10 °C to 100 °C (50 °F to 212 °F)		0 °C to 95 °C (32 °F to 203 °F)		0 °C to 85 °C (32 °F to 185 °F)	
6.9 bar @ -10 to 65 °C (100 psi @ 14 to 150 °F) 4 bar @ 65 to 100 °C (58 psi @ 150 to 212 °F)		6.9 bar @ 95 °C (100 psi @ 203 °F)		6.9 bar (100 psi) maximum	
2734-2735 pipe size range ½ in. to 4 in. Signet fittings or a variety of ¾ in. fittings		1 in. and up		¾ in. and up	
¾ in. NPT threads or ISO 7-1/R 3/4 in. or Signet flow fittings		¾ in. NPT threads or ISO 7-1/R 3/4 in. (using threads from 2751, or 2760)			
Ryton® (PPS)					
PTFE					
FKM					
Glass (pH) or Platinum (ORP)					
Any angle, even upside down		Angle is minimum +15° from horizontal		Any angle, even upside down	
Standard		Differential		Standard	
8900, 9900		8900, 9900, 9950			
General purpose; also options available for use in HF (< 2%)		Harsh Chemicals (heavy metals, Hg^{++}, Cu^{+}, Pb^{++}, ClO_4^{-}, Br^{-}, I^{-}, CN^{-}, S_2^{-} and other chemicals that react with Ag^{+} or KCl.)		General purpose; options for higher temperatures are available, 110 °C (230 °F) @ 150 PSI	
CE, FCC, RoHS compliant, China RoHS		Manufactured under ISO 9001 for Quality			

Signet pH/ORP Electrode Application Matrix

	2724 2726	2724-HF 2726-HF	2726-LC	2725	2734 2736	2734-HF 2736-HF
Measurement						
pH	*****	*****	*****		*****	*****
ORP				*****		
Application						
Low Temperature < 10 °C	*****	Ø	*****	*****	Ø	Ø
High Temperature > 85 °C	Ø	Ø	Ø	Ø	*****	*****
General Purpose	*****	*****	*****	*****	***	***
Harsh Application	**	**	**	**	*****	*****
Low Conductivity (< 100 uS)	Ø	Ø	*****	Ø	Ø	Ø
Chemical Compatibility						
Hydrofluoric Acid (HF) < 2%	Ø	*****	Ø	Ø	Ø	*****
Mercury (Hg^{2+})	**	**	Ø	**	***	***
Copper (Cu^{+})	**	**	Ø	**	***	***
Lead (Pb^{2+})	**	**	Ø	**	***	***
Perchlorate (ClO_4^{-})	**	**	Ø	**	***	***
Bromine (Br-)	**	**	Ø	**	***	***
Iodine (I^{-})	**	**	Ø	**	***	***
Cyanide (CN^{-})	**	**	Ø	**	***	***
Sulfide (S^{2-})	**	**	Ø	**	***	***
Silver Sulfide (Ag_2S)	**	**	Ø	**	***	***
Silver Bromide (AgBr)	**	**	Ø	**	***	***
Silver Iodide (AgI)	**	**	Ø	**	***	***
Silver Cyanide (AgCN)	**	**	Ø	**	***	***
Mounting						
Submersible	*****	*****	*****	*****	*****	*****
Signet Fitting	*****	*****	*****	*****	*****	*****
Wet-Tap	Ø	Ø	Ø	Ø	Ø	Ø
3/4 inch NPT	*****	*****	*****	*****	*****	*****
1 inch NPT	***	***	***	***	***	***
ISO 7/1-R 3/4	*****	*****	*****	*****	*****	*****

Chart Key	
Ø	Not Recommended
**	Compatible
***	Good
*****	Better
Special	Special Order Product

	2735	2756-WT	2757-WT	2764 2766	2765 2767	2774 2776	2775 2777
Measurement							
pH		*****		*****		*****	
ORP	*****		*****		*****		*****
Application							
Low Temperature < 10 °C	***	*****	*****	*****	*****	*****	*****
High Temperature > 85 °C	*****	Ø	Ø	*****	*****	Special	Special
General Purpose	***	***	***	**	**	***	***
Harsh Application	*****			*****	*****	***	***
Low Conductivity (< 100 uS)	Ø	Ø	Ø	Ø	Ø	Ø	Ø
Chemical Compatibility							
Hydrofluoric Acid (HF) < 2%	Ø	Ø	Ø	Ø	Ø	Ø	Ø
Mercury (Hg^{2+})	***	Ø	Ø	*****	*****	***	***
Copper (Cu^{+})	***	Ø	Ø	*****	*****	***	***
Lead (Pb^{2+})	***	Ø	Ø	*****	*****	***	***
Perchlorate (ClO_4^{-})	***	Ø	Ø	*****	*****	**	**
Bromine (Br-)	***	Ø	Ø	*****	*****	**	**
Iodine (I^{-})	***	Ø	Ø	*****	*****	**	**
Cyanide (CN^{-})	***	Ø	Ø	*****	*****	**	**
Sulfide (S^{2-})	***	Ø	Ø	*****	*****	**	**
Silver Sulfide (Ag_2S)	***	Ø	Ø	*****	*****	**	**
Silver Bromide (AgBr)	***	Ø	Ø	*****	*****	**	**
Silver Iodide (AgI)	***	Ø	Ø	*****	*****	**	**
Silver Cyanide (AgCN)	***	Ø	Ø	*****	*****	**	**
Mounting							
Submersible	*****	Ø	Ø	*****	*****	*****	*****
Signet Fitting	*****	Ø	Ø	Ø	Ø	Ø	Ø
Wet-Tap	Ø	*****	*****	Ø	Ø	Ø	Ø
3/4 inch NPT	*****	Ø	Ø	Ø	Ø	*****	*****
1 inch NPT	***	Ø	Ø	*****	*****	***	***
ISO 7/1-R 3/4	*****	Ø	Ø	Ø	Ø	Special	Special

Signet 2724-2726 pH/ORP Electrodes

General Purpose

Compatible with ALL Signet pH/ORP Instruments

Flat

Protected Bulb

The Signet 2724-2726 pH and ORP electrodes are general purpose sensors ideal for a wide range of applications. These feature a patented reference design and uses the unique foul-proof patented DryLoc® connector. The large area PE reference junction and pathway is constructed to increase the total reference effectiveness and ensures long service life.

The DryLoc® connector with corrosion resistant gold plated contacts readily connects the sensor to the mating 2751 pH/ORP Smart Sensor Electronics or the 2760 Preamplifier. The robust Ryton® threaded sensor body and choice of flat pH, bulb pH, or flat ORP sensing elements allows a broad range of chemical and mechanical compatibility for a wide variety of applications.

There are two optional pH sensing versions available, HF and LC. The HF version is for applications where traces of hydrofluoric acid (2% or less) will attack standard pH glass. The LC version can be used for low conductivity fluids 20 - 100 µS/cm nominal and below 20 µS when mounted under controlled conditions.

The quick temperature response is available in either a Pt1000 or 3 KΩ temperature sensor and allows compatibility with all Signet pH/ORP instruments. The 2724-2726 electrodes incorporate ¾ inch NPT or ISO 7/1-R 3/4 threads for installing into standard pipe-tees. They can also be mounted directly into Signet standard fittings, DN15 to DN100 (½ to 4 inch).

Features

- **Patented reference design for exceptional performance and prolonged life in harsh environments***
- **Memory chip enabled for access to a wide range of unique features when connected to the Signet 2751 pH/ORP Smart Sensor Electronics**
- **Ryton® (PPS) body for broad range of chemical compatibility**
- **Patented DryLoc® connector with gold plated contacts**
- **Special design allows for installation at any angle, even inverted or horizontal**
- **¾" NPT or ISO 7/1-R 3/4 threaded sensors for use with reducing tees DN15 to DN100 (½ to 4 in.)**
- **Mounts in Signet standard fittings from DN15 to DN100 (½ to 4 in.)**
- **Quick temperature response**
- **Bulb and flat HF resistant glass available for trace HF, in less than 2% concentration applications**
- **Low conductivity sensor available for liquids down to 20 µS/cm**

Applications

- **Water & Wastewater Treatment**
- **Neutralization Systems**
- **Effluent Monitoring**
- **Sanitization Systems**
- **Pool & Spa Control**
- **Aquatic Animal Life Support Systems**
- **Process Control**
- **Cooling Towers**

*U.S. Patent Nos.: 6,666,701, 7,799,193 B2, 7,867,371 B2 and 8,211,282 B2

Specifications

General			
Performance	Efficiency	>97% @ 25 °C (77 ° F)	
Operating Range	pH	0 to 14 pH	
	ORP	±2000 mV	
	3-2726-LC	Low conductivity fluids; 20 - 100 µS/cm nominal < 20 µS; flow must be less than 150 ml/min in a properly grounded system	
	3-2724-HF, 3-2726-HF	Hydrofluoric acid resistant glass, pH 6 or below; trace HF ≤2%	
Compatibility			
	2751 Smart Sensor Electronics (for 8900, 9900, 9950, 4 to 20 mA or Profibus Concentrator), 2760 Preamplifier		
Temperature Sensor			
	Pt1000 versions	Compatible with Signet 2751 pH/ORP Smart Sensor Electronics for connection to a PLC or to the Signet 8900, 9900 or 9950 instruments	
	3 KΩ Balco versions	Compatible with Signet 2751 pH/ORP Smart Sensor Electronics or with Signet 2760 pH/ORP Preamplifier for connection to the Signet 8750 pH/ORP Transmitter	
Process Connection			
	¾ in. NPT	ISO 7/1-R 3/4	Mounts into Signet fittings
Wetted Materials			
	pH	Ryton® (PPS), glass, UHMW PE, FKM	
	ORP	Ryton® (PPS), glass, UHMW PE, FKM, Platinum	
Max. Temperature/Pressure Rating			
Operating Temperature Range*		-10 °C to 85 °C	14 °F to 185 °F
Operating Pressure Range		6.8 bar @ -10 to 65 °C (100 psi @ 14 to 150 °F)	
		4 bar @ 65 to 85 °C (58 psi @ 150 to 185 °F)	
*Best performance for 2724-HF, 2726-HF sensors is above 10 °C (50 °F)			
Recommended Storage Temperature			
		0 °C to 50 °C	32 °F to 122 °F
The electrode glass will shatter if shipped or stored at temperature below 0 °C (32 °F)			
The performance life of the electrode will shorten if stored at temperatures above 50 °C (122 °F)			
Mounting			
In-line Mounting	Use the sensor threads		
	Use a Signet standard fitting up to 4 in.		
	Sensor can be mounted at any angle		
Submersible Mounting	Use threads on models 2751 or 2760		
	Requires ¾ inch NPT or ISO 7/1-R 3/4 male threaded liquid tight extension conduit.		
Shipping Weight			
	0.25 kg	0.55 lb	
Standards and Approvals			
	RoHS compliant, China RoHS, Made in USA from US and Imported Parts		
	Manufactured under ISO 9001 for Quality, ISO 14001 for Environmental Management and OHSAS 18001 for Occupational Health and Safety		

See Temperature and Pressure graphs for more information

Dimensions

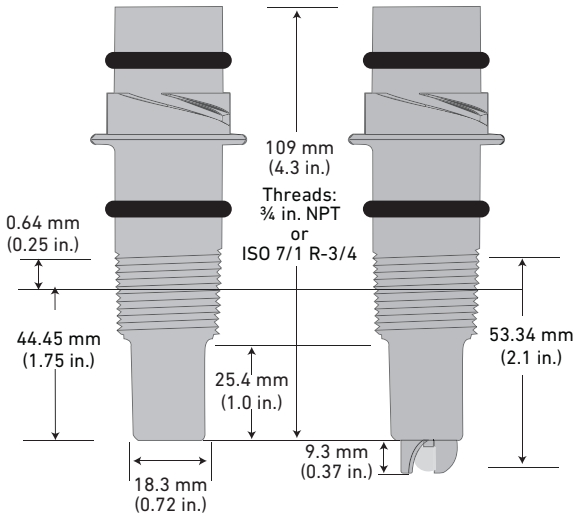

Mounting Angle

Models 2724-2726 may be mounted at any angle without affecting the performance.

*Avoid locations with air pockets and sediment.

When mounting in standard threaded fittings the electrode must be mounted horizontally to 60 degrees below horizontal position only.

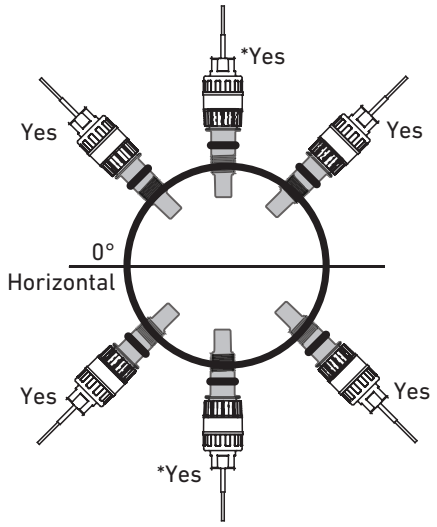

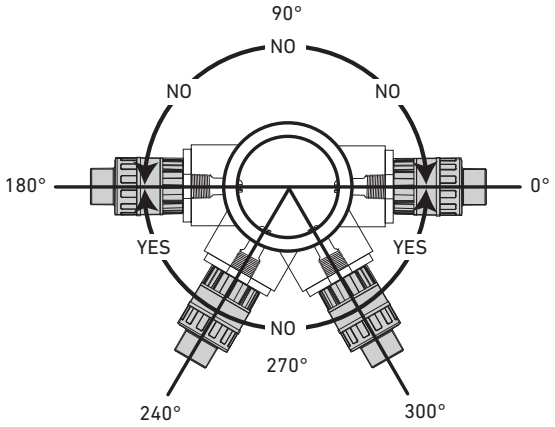

Signet Model D100 DeviceLink

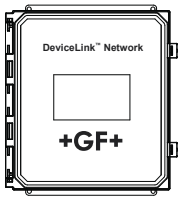

System Overview

Panel Mount	Pipe, Tank, Wall Mount	4 to 20 mA Output	Automation System
Signet Instruments 8900 9900 or 9950 with 2751 Electronics	Signet Instruments 9900 with 2751 Electronics and Rear Enclosure	2751 Sensor Electronics and Customer Supplied Chart Recorder or Programmable Logic Controller or Programmable Automation Controller	2751 Sensor Electronics with 0486 Profibus Concentrator and Customer Supplied Programmable Logic Controller or Programmable Automation Controller

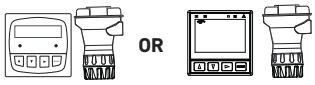

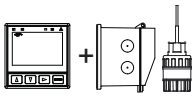

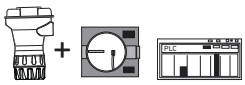

Signet 2724-2726
DryLoc® pH/ORP Electrodes

All sold separately

In-Line Installation -
Signet and threaded 1/2 in to 4 in fittings only

Submersible Installation -
Customer supplied pipe extension or conduit with 3/4 in. NPT or ISO 7/1-R 3/4 threads

Electrode Key Features and Benefits:

1. Ryton® body for chemical compatibility with most harsh chemicals.
2. Porous UHMW PE (ultra high molecular weight polyethylene) junction resists fouling and build-up.
3. Internal temperature sensor located in the glass stem for a quick temperature response.
4. DryLoc® connector with corrosion resistant gold pins for quick and easy sensor removal.
   - Resists moisture and dirt intrusion.
5. Dual-patented reference design with a 406 mm (16 inch) reference pathway enhances life.
   - This enables the sensor to last significantly longer than other standard pH/ORP electrodes in most applications.

5a. With the new patented reference design, the Signet 2726-LC version performs better in low conductivity water between 20 - 100 µS and lasts longer than previous "DI" electrodes.

5b. The 2726-LC sensor also performs in applications with extremely low (less than 20 µS) conductivity. Special precautions must be taken to avoid measurement complications.
Please note the following.
   - Electrostatic charges (streaming potentials) can cause dramatic offsets in a system with very low conductivity water. To minimize this, sensors should be placed in a well grounded system.
   - To enhance performance, a low flow cell is recommended to provide a steady flow rate (150 ml/minute). Sensors placed in high flow applications will experience noisier readings due to streaming potential.

6. Threads for NPT or ISO process connection into reducing tees
   - Use off-the-shelf GF reducing tees DN20 to DN100 (¾ to 4 in.).
7. Mounts directly into Signet fittings (½ in. 4 in.) for easy sensor retrofitting.
8. Mount submersed into a tank via the 2751 or 2760 back threads.

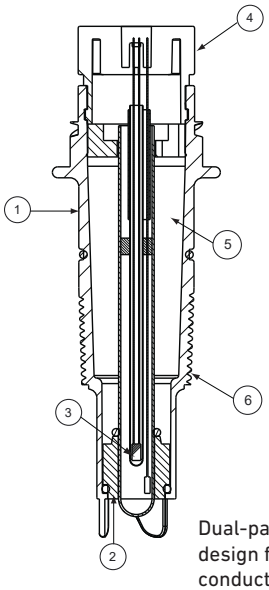

Dual-patented reference design for long life in conductivity or chemicals.

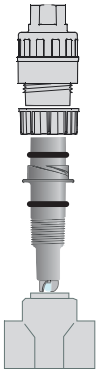

⑥ Sensor in threaded reducing tee

⑦ Sensor in Signet fitting

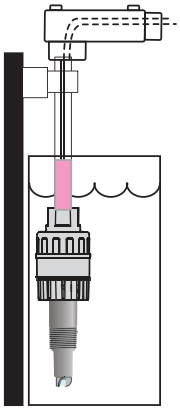

⑧ Sensor submersible installation

Temperature/Pressure Graph

Note:
The pressure/temperature graphs are specifically for the Signet sensor. During system design the specifications of all components must be considered. In the case of a metal piping system, a plastic sensor will reduce the system specification.

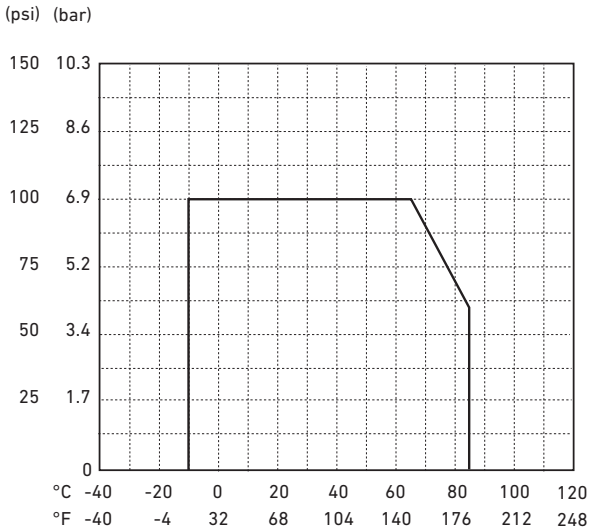

Application Tips

- Use the flat glass electrodes when a self-cleaning feature is desired; especially useful in applications with abrasive chemicals.
- Use bulb protected electrodes for general purpose applications
- ORP electrodes are generally used for chemical reaction monitoring, not control.
- Ensure that sensor materials are chemically compatible with the process liquid.
- Keep electrode tip wet, avoid air pockets and sediment.

Model 2724-2726 Ordering Notes

1) pH and ORP electrodes require connection to model 2751 sensor electronics or 2760 preamplifier.
2) The EasyCal feature automatically recognizes standard 4.0, 7.0, and 10.0 pH buffer or ORP quinhydrone solutions of +87 and +264 mV or Light's Solution, +469 mV, and simplifies calibration. For EasyCal ORP only single point calibration is used.

Buffer Solutions

3822-7004
3822-7007
3822-7010

Quinhydrone

3822-7115

The Signet pH buffers are ideal for calibration. The liquid solutions are conveniently packaged in one pint (473 ml) bottles. pH buffer kits in powder pillows are available for mixing fresh solutions with water at the time of use.

All pH buffers are color coded for easy identification; 4.01 pH is red, 7.00 pH is yellow, and 10.00 pH is blue. All pH buffers are traceable to NIST standards. The 4 and 7 buffer solutions can be used to calibrate ORP sensors when saturated with quinhydrone.

Ordering Information

Mfr. Part No.	Code	Tip Design	Process Connection Thread Options
pH Electrodes			
Temperature element Pt1000; use with 2751 pH/ORP Smart Sensor Electronics* and Profibus Concentrator			
3-2724-00	**159 001 545**	Flat	¾ in. MNPT, Thread
3-2724-01	**159 001 546**	Flat	ISO 7/1-R 3/4 Thread
3-2726-00	**159 001 553**	Bulb	¾ in. MNPT, Thread
3-2726-01	**159 001 554**	Bulb	ISO 7/1-R 3/4 Thread
3-2726-HF-00	**159 001 549**	Bulb, HF Resistant[1]	¾ in. MNPT, Thread
3-2726-HF-01	**159 001 550**	Bulb, HF Resistant[1]	ISO 7/1-R 3/4 Thread
3-2726-LC-00	**159 001 557**	Bulb, Low Conductivity[2]	¾ in. MNPT, Thread
3-2726-LC-01	**159 001 558**	Bulb, Low Conductivity[2]	ISO 7/1-R 3/4 Thread
Temperature element 3 KΩ Balco; Compatible with both the 2751 pH/ORP Smart Sensor Electronics* and the 2760 Preamplifier**			
3-2724-10	**159 001 547**	Flat	¾ in. MNPT, Thread
3-2724-11	**159 001 548**	Flat	ISO 7/1-R 3/4 Thread
3-2724-HF-10	**159 001 771**	Flat, HF Resistant[1]	3/4 in. NPT, Thread
3-2724-HF-11	**159 001 772**	Flat, pH Resistant[1]	ISO 7/1-R 3/4 Thread
3-2726-10	**159 001 555**	Bulb	¾ in. MNPT, Thread
3-2726-11	**159 001 556**	Bulb	ISO 7/1-R 3/4 Thread
3-2726-HF-10	**159 001 551**	Bulb HF Resistant[1]	¾ in. MNPT, Thread
3-2726-HF-11	**159 001 552**	Bulb HF Resistant[1]	ISO 7/1-R 3/4 Thread
3-2726-LC-10	**159 001 559**	Bulb, Low Conductivity[2]	¾ in. MNPT, Thread
3-2726-LC-11	**159 001 560**	Bulb, Low Conductivity[2]	ISO 7/1-R 3/4 Thread
ORP Electrodes; Compatible with both the 2751 pH/ORP Smart Sensor Electronics* and the 2760 Preamplifier**			
3-2725-60	**159 001 561**	Flat	¾ in. MNPT, Thread
3-2725-61	**159 001 562**	Flat	ISO 7/1-R 3/4 Thread

*The 2751 pH/ORP Smart Sensor Electronics has a digital (S^3L) output which is used with 8900, 9900 or 9950 instruments, and the Profibus Concentrator.
It also has a 4 to 20 mA output for connections to PLC's, data recorders, etc.

**The 2760 Preamplifier is used for connection directly to 8750 transmitter or other analog transmitters.

[1]HF resistant ≤2% HF

[2]Low conductivity applications, 20 - 100 µS/cm recommended

Note:
The 3 KΩ Balco temperature element electrodes are compatible with the 2751 pH/ORP Smart Sensor Electronics, 8900, 9900 and 9950 instruments.

Accessories and Replacement Parts

Mfr. Part No.	Code	Description
1220-0021	**198 801 000**	O-ring, FKM (2 required per sensor)
3-2700.395	**159 001 605**	Calibration kit: includes 3 polypropylene cups, box used as cup stand, 1 pint pH 4.01, 1 pint pH 7.00
3822-7115	**159 001 606**	20 gm bottle quinhydrone for ORP calibration (must use pH 4.01 and/or pH 7.00 buffer solutions)
3-2759	**159 000 762**	pH/ORP System Tester (adapter cable sold separately)
3-2759.391	**159 000 764**	2759 DryLoc adapter cable (for use with 2750 and 2760)
3-0700.390	**198 864 403**	pH Buffer Kit (1 each 4, 7, 10 pH buffer in powder form, makes 50 ml of each)
3822-7004	**159 001 581**	pH 4.01 buffer solution, 1 pint (473 ml) bottle
3822-7007	**159 001 582**	pH 7.00 buffer solution, 1 pint (473 ml) bottle
3822-7010	**159 001 583**	pH 10.00 buffer solution, 1 pint (473 ml) bottle
3800-5000	**159 838 107**	3.0M KCl storage solution for pH and ORP, 1 pint (473 ml) bottle
3-2700.397	**159 001 870**	Protective cap for pH/ORP electrodes storage and shipping, 5 pieces
3-2700.398	**159 001 886**	Lubricant kit

Signet 2734-2736 pH/ORP Electrodes

High Performance

Compatible with Signet 8900/9900/9950 Instruments

Flat

Protected Bulb

The Signet 2734-2736 pH and ORP electrodes are ideal for a wide range of harsh applications with low concentrations of poisoning ions, and chemicals that react with silver ion, Ag^+. The superior glass formulation provides excellent chemical resistance in acidic and alkaline/caustic environments. The large area PTFE reference junction, salt bridge and reference electrode are constructed to increase the total reference effectiveness, resist chemical attack, help resist coating, and ensure long service life in harsh applications.

The DryLoc® connector with corrosion resistant gold plated contacts readily connects the sensor to the mating 2751 pH/ORP Smart Sensor Electronics. The robust Ryton® threaded sensor body and choice of flat, bulb pH, or flat ORP sensing elements provide a broad range of chemical compatibility for a wide variety of applications.

There is an optional pH sensing version available for applications with HF. The HF version is for applications where traces of hydrofluoric acid (2% or less) will attack standard pH glass.

The quick temperature response is available in a Pt1000 temperature sensor and allows compatibility with the Signet 8900, 9900 and 9950 instruments.

The sensors incorporate ¾ inch NPT or ISO 7/1-R 3/4 threads for installing into standard pipe-tees. They can also be mounted directly into Signet standard fittings, DN15 to DN100 (½ to 4 inch).

Features

- **Enhanced reference chemistry to resist chemical poisoning and prolong the life of the electrodes in harsh environments**
- **PTFE reference junction resists fouling and chemical attack**
- **Superior pH glass formulation for excellent chemical resistance in acidic and alkaline/ caustic environments**
- **Ryton® (PPS) body for broad range of chemical compatibility**
- **Memory chip enabled for access to a range of unique features when connected to the Signet 2751 pH/ORP Smart Sensor Electronics**
- **Patented reference design for exceptional performance***
- **Patented DryLoc® connector with gold plated contacts**
- **Mounts in Signet standard fittings from DN15 to DN100 (½ to 4 in.) or standard pipe fitting, 3/4" NPT or ISO 7/1-R 3/4**
- **Special design allows for installation at any angle, even inverted or horizontal**
- **Quick temperature response**
- **Bulb and flat HF resistant glass available for trace HF, in less than 2% concentration applications**

Applications

- **Water & Wastewater Treatment**
- **Neutralization Systems**
- **Plating Baths**
- **Air Scrubbers**
- **Metal Removal**
- **Process Control**
- **Cooling Towers**

*U.S. Patent Nos.: 6,666,701, 7,799,193 B2, 7,867,371 B2 and 8,211,282 B2

Specifications

General			
Performance	Efficiency	>95% @ 25 °C (77 ° F)	
Operating Range	pH	0 to 14 pH	
	ORP	±2000 mV	
	3-2734-HF, 3-2736-HF	Hydrofluoric acid resistant glass, pH 6 or below; trace HF ≤2%	
Compatibility			
	2751 pH/ORP Smart Sensor Electronics (for 8900, 9900, 9950 , Profibus Concentrator, 4 to 20 mA)		
Temperature Sensor			
	Pt1000	Compatible with Signet 2751 pH/ORP Smart Sensor Electronics for connection to a PLC or to the Signet 8900, 9900 or 9950 instruments and 0486 Profibus Concentrator	
Process Connection			
	¾ in. NPT	ISO 7/1-R ¾	Mounts into Signet fittings
Wetted Materials			
	pH	Ryton® (PPS), glass, PTFE, FKM	
	ORP	Ryton® (PPS), glass, PTFE, FKM, Platinum	
Max. Temperature/Pressure Rating			
Operating Temperature Range		10 °C to 100 °C	50 °F to 212 °F
Operating Pressure Range		0 to 6.9 bar (0 to 100 psi) @ 10 °C to 65 °C (50 °F to 149 °F)	
		Linearity Derated 6.9 to 4.0 bar (100 to 58 psi) @ 65 °C to 100 °C (149 °F to 212 °F)	
Recommended Storage Temperature			
		0 °C to 50 °C	32 °F to 122 °F
The electrode glass will shatter if shipped or stored at temperature below 0 °C (32 °F)			
The performance life of the electrode will shorten if stored at temperatures above 50 °C (122 °F)			
Mounting			
In-line Mounting	Use the sensor threads		
	Use a Signet standard fitting ½ to 4 in.		
	Sensor can be mounted at any angle		
Submersible Mounting	Use threads on model 2751		
	Requires ¾ in. NPT or ISO 7/1-R ¾ male threaded liquid tight extension conduit		
Shipping Weight			
	0.25 kg	0.55 lb	
Standards and Approvals			
	CE, FCC, RoHS compliant, China RoHS, Made in USA from US and Imported Parts		
	Manufactured under ISO 9001 for Quality, ISO 14001 for Environmental Management and OHSAS 18001 for Occupational Health and Safety		

See Temperature and Pressure graphs for more information

Dimensions

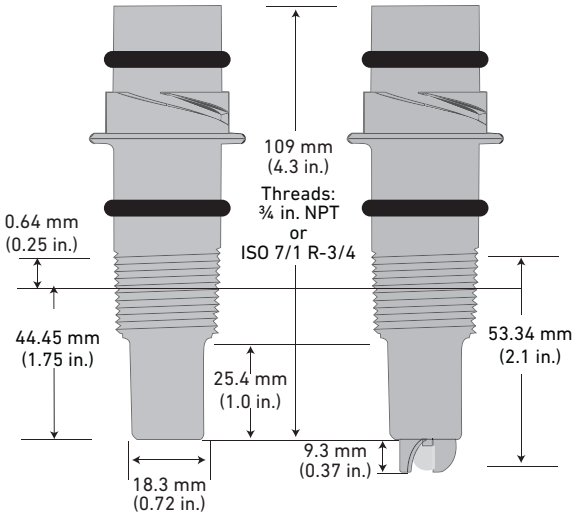

Mounting Angle using GF Signet Fittings

Models 2734-2736 may be mounted at any angle without affecting the performance

*Avoid locations with air pockets and sediment

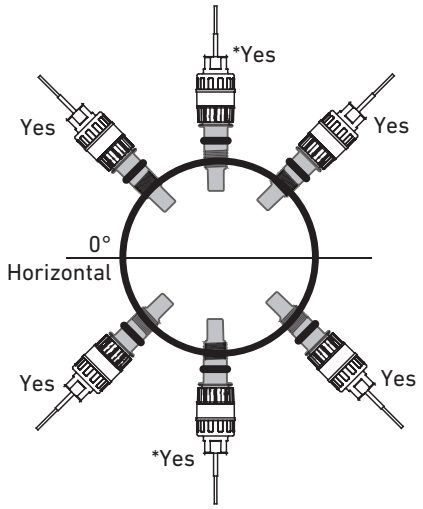

When mounting in standard threaded fittings the electrode must be mounted horizontally to 60 degrees below horizontal position only.

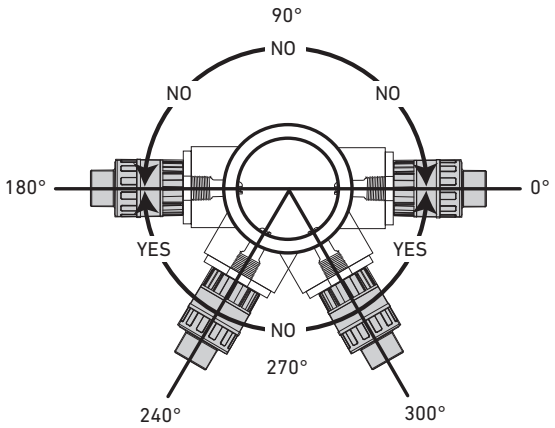

Signet Model D100 DeviceLink

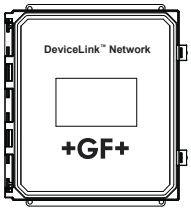

System Overview

Panel Mount	Pipe, Tank, Wall Mount	4 to 20 mA Output	Automation System
Signet Instruments 8900 9900 9950 with 2751 Electronics	Signet Instruments 9900 with 2751 and Rear Enclosure	2751 Sensor Electronics and Customer Supplied Chart Recorder or Programmable Logic Controller or Programmable Automation Controller	2751 Sensor Electronics with 0486 Profibus Concentrator and Customer Supplied Programmable Logic Controller or Programmable Automation Controller

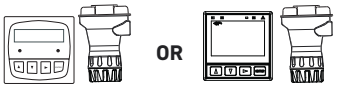

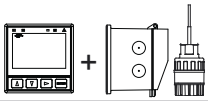

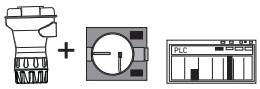

Signet 2734-2736
DryLoc® pH/ORP Electrodes

All sold separately

In-Line Installation -
Signet and threaded fittings only
(½ in. to 4 in.)

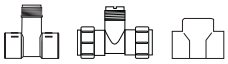

Submersible Installation -
Customer supplied pipe extension
or conduit with 3/4 in. NPT or
ISO 7/1-R 3/4 threads

Electrode Key Features and Benefits:

1. Ryton® body for chemical compatibility with most harsh chemicals.
2. Porous PTFE junction resists fouling, chemicals, and build-up.
3. Enhanced reference chemistry to resist poisoning and to prolong the life of the electrodes in harsh media applications.
4. Internal temperature sensor located in the glass stem for a quick temperature response.
5. Memory chip enabled for convenient data storage and access (calibration data, operational data, and manufacturing data), electrode health monitoring via glass impedance measurement when used in connection with the 2751 pH/ORP Smart Sensor Electronics.
6. DryLoc® connector with corrosion resistant gold plated pins for quick and easy sensor removal. Resists moisture and dirt intrusion.
7. Threads for NPT or ISO process connection into reducing tees. Use off-the-shelf GF reducing tees DN20 to DN100 (¾ to 4 in.).
8. Mounts directly into Signet fittings (½ in. to 4 in.) for easy sensor retrofitting.
9. Mount submersed into a tank via the 2751 pH/ORP Smart Sensor Electronics.

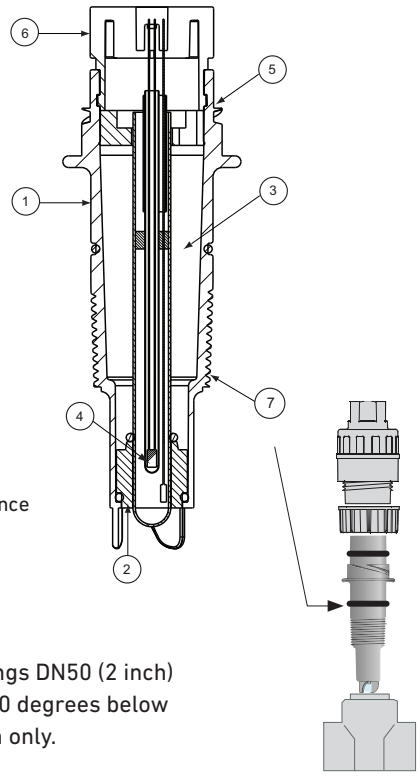

Dual-patented reference design for long life.

For pipes and fittings DN50 (2 inch) or larger, mount 60 degrees below horizontal position only.

Sensor in threaded reducing tee

8 Sensor in Signet fitting

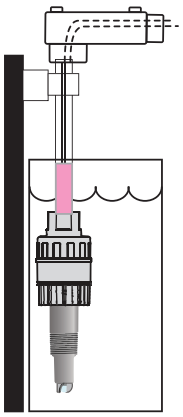

9 Sensor in submersible installation

Temperature/Pressure Graph

Note:
The pressure/temperature graph is specifically for the Signet sensor. During system design the specifications of all components must be considered. In the case of a metal piping system, a plastic sensor will reduce the system specification.

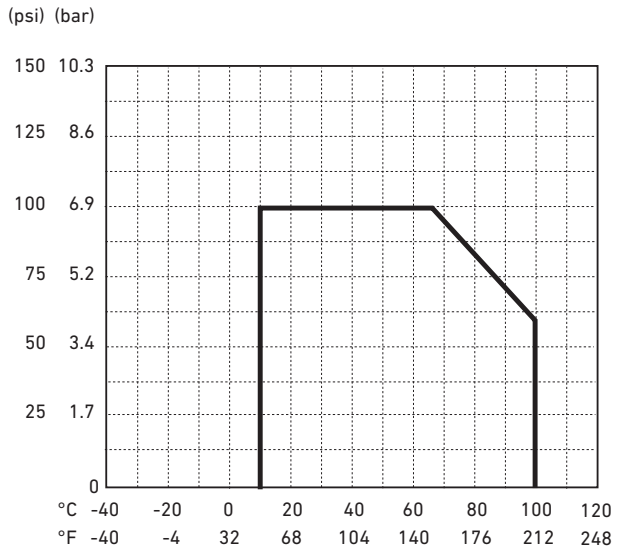

Application Tips

- Use the flat glass electrodes when a self-cleaning feature is desired; especially useful in applications with abrasive chemicals.
- Use bulb protected electrodes for general purpose applications.
- ORP electrodes are generally used for chemical reaction monitoring, not control.
- Ensure that sensor materials are chemically compatible with the process liquid.
- Keep electrode tip wet, avoid air pockets and sediment.

Model 2734-2736 Ordering Notes

1) pH and ORP Sensor Electrodes require connection to model 2751 Sensor Electronics.
2) The EasyCal feature automatically recognizes standard 4.0, 7.0, and 10.0 pH buffer or ORP quinhydrone solutions of +87 and +264 mV or Light's Solution, +469 mV, and simplifies calibration. For EasyCal ORP only single point calibration is used.

Buffer Solutions
3822-7004
3822-7007
3822-7010

Quinhydrone
3822-7115

The Signet pH buffers are ideal for calibration. The liquid solutions are conveniently packaged in one pint (473 ml) bottles. pH buffer kits in powder pillows are available for mixing fresh solutions with water at the time of use.

All pH buffers are color coded for easy identification; 4.01 pH is red, 7.00 pH is yellow, and 10.00 pH is blue. All pH buffers are traceable to NIST standards. The 4.01 and 7.00 buffer solutions can be used to calibrate ORP sensors when saturated with quinhydrone.

Ordering Information

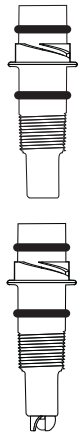

Mfr. Part No.	Code	Tip Design	Process Connection
pH Electrodes - Temperature element Pt1000; use with 2751pH/ORP Smart Sensor Electronics*			
3-2734-00	**159 001 774**	Flat	3/4 in. NPT, Thread
3-2734-01	**159 001 775**	Flat	ISO 7/1-R 3/4 Thread
3-2734-HF-00	**159 001 776**	Flat, HF Resistant[1]	3/4 in. NPT, Thread
3-2734-HF-01	**159 001 777**	Flat, HF Resistant[1]	ISO 7/1-R 3/4 Thread
3-2736-00	**159 001 778**	Bulb	3/4 in. NPT, Thread
3-2736-01	**159 001 779**	Bulb	ISO 7/1-R 3/4 Thread
3-2736-HF-00	**159 001 780**	Bulb, HF resistant[1]	3/4 in. NPT, Thread
3-2736-HF-01	**159 001 781**	Bulb, HF resistant[1]	ISO 7/1-R 3/4 Thread
ORP Electrodes - Compatible with 2751 pH/ORP Smart Sensor Electronics			
3-2735-60	**159 001 782**	Flat, 10K	3/4 in. NPT, Thread
3-2735-61	**159 001 783**	Flat, 10K	ISO 7/1-R 3/4 Thread

*The 2751 pH/ORP Smart Sensor Electronics has a digital (S^3L) output which is used with 8900, 9900 or 9950 instruments, and Profibus Concentrator.
It also has a 4 to 20 mA output for connections to PLC's, data recorders, etc.

[1]HF resistant ≤2% HF

Note:
The 2734 and 2736 pH electrodes are **not** compatible with the Signet 2760 Preamplifier.

Accessories and Replacement Parts

Mfr. Part No.	Code	Description
1220-0021	**198 801 000**	O-ring, FKM (2 required per sensor)
3-2700.395	**159 001 605**	Calibration kit: includes 3 polypropylene cups, box used as cup stand, 1 pint (473 ml) pH 4.01, 1 pint (473 ml) pH 7.00
3822-7115	**159 001 606**	20 gm bottle quinhydrone for ORP calibration (must use pH 4.01 and/or pH 7.00 buffer solutions)
3-2759	**159 000 762**	pH/ORP System Tester (adapter cable sold separately)
3-2759.391	**159 000 764**	2759 DryLoc adapter cable (for use with 2751 and 2760)
3-0700.390	**198 864 403**	pH Buffer Kit (1 each 4, 7, 10 pH buffer in powder form, makes 50 ml of each)
3822-7004	**159 001 581**	pH 4.01 buffer solution, 1 pint (473 ml) bottle
3822-7007	**159 001 582**	pH 7.00 buffer solution, 1 pint (473 ml) bottle
3822-7010	**159 001 583**	pH 10.00 buffer solution, 1 pint (473 ml) bottle
3800-5000	**159 838 107**	3.0 M KCl storage solution for pH and ORP, 1 pint (473 ml) bottle
3-2700.397	**159 001 870**	Protective cap for pH/ORP electrodes storage and shipping, 5 pieces
3-2700.398	**159 001 886**	Lubricant kit

Signet 2764-2767 Differential DryLoc® pH/ORP Electrodes

High Performance

Flat
Glass

Protected
Bulb

The Signet 2764-2767 Differential pH & ORP electrodes are high preformance sensors built with the DryLoc® connector, a Ryton® body, and PTFE reference junction to handle the most extreme and harshest of chemical applications.

These differential electrodes use a field-proven 3-electrode differential technique: the pH and reference electrodes are measured against a ground electrode, ensuring a steady and stable signal. A key feature is the reference electrode, which is housed in a glass half-cell embedded in the reference chamber and is protected from compounds that may contain sulfides (S^{2-}) and metals. To ensure long service life, the reference features a refillable electrolyte chamber and a replaceable equitransferant salt bridge, both easily serviced in the field. The patented porous PTFE reference junction resists fouling, clogging and chemical attack.

Other elements of the design are the solution ground, the pH/ORP electrodes, and the temperature element. The solution ground eliminates noisy measurements by draining electrical current away from the reference electrode. The pH/ORP electrodes are designed with a flat or bulb surface, and a temperature device positioned at the tip of the measurement surface for a quick temperature response. Various temperature devices offered include 3 KΩ, or Pt1000 RTD.

The electrodes are used with the Signet 2751 Smart Sensor Electronics, which provide a blind 4 to 20 mA output or use the digital (S^3L) output to connect the Signet 8900, 9900 or 9950 instruments, and the Profibus Concentrator. The electrodes can also be used with the 2760 Preamplifier to connect to ProPoint® and ProcessPro® series of pH/ORP instrumentation.

Features

- **Differential design for stable measurements in the most aggressive applications**
- **Long service life even in severe or difficult chemical applications**
- **Memory chip enabled for access to a wide range of unique features when connected to the Signet 2751 pH/ORP Smart Sensor Electronics**
- **Ryton (PPS) body for broad range of chemical compatibility**
- **Watertight DryLoc® connector with foul-proof gold plated contacts***
- **Porous PTFE reference junction resists fouling and chemical attack**
- **Rebuildable reference electrode**
- **Solution ground**
- **Temperature sensor (pH)**
- **Easy sensor replacement using DryLoc electrode connector**
- **Quick temperature response**
- **Compatible with all Signet instruments**

Applications

- **Water and Wastewater Treatment**
- **Coagulation and Flocculation**
- **Plant Effluent**
- **Plating Baths**
- **Scrubbers**
- **Textile Dye Process**
- **Harsh Chemical Applications**
- **Heavy Metal Removal and Recovery**
- **Toxics Destruction**
- **Surface Finishing**

See Technical Reference section for assistance in choosing the correct sensor.

*U.S. Patent No.: 6,666,701

Specifications

General		
Compatibility	Signet 2751 and 2760	
Operating Range	2764/2766	0 to 14 pH
	2765/2767	±1500 mV (ORP)
Process Connection	1 in., for use in reducing tees up to 4 in.	
Wetted Materials		
Body	Ryton®	
Reference Junctions	PTFE	
Sensing Surface	pH	Glass membrane
	ORP	Platinum
O-rings	FKM	
Solution Ground	Carbon graphite	
Max. Temperature/Pressure Rating		
Operating Temperature	0 °C to 95 °C	32 °F to 203 °F
Max. Operating Pressure	6.89 bar @ 95 °C	100 psi @ 203 °F
Recommended Storage Temperature		
	0 °C to 50 °C	32 °F to 122 °F
The electrode glass will shatter if shipped or stored at temperature below 0 °C (32 °F).		
The performance life of the electrode will shorten if stored at temperatures above 50 °C (122 °F).		
Mounting		
In-line/Vertical Mounting	Use sensor 1 in. threads. Sensor must be mounted at least 15 degrees above the horizontal axis.	
Submersible Mounting	Use threads on Model 2751 or 2760; requires ¾ in. NPT or ISO 7/1-R 3/4 male threaded extension.	
Reference		
	Electrolyte	Buffered equi-transferant salt solution gel
	Element	pH half-cell
Temperature Sensor	pH	3 KΩ, Pt1000 RTD
	ORP	10K ID Resistor
Shipping Weight		
	0.25 kg	0.55 lb
Standards & Approvals		
	Manufactured under ISO 9001 for Quality, Made in USA from US and Imported Parts	

Dimensions

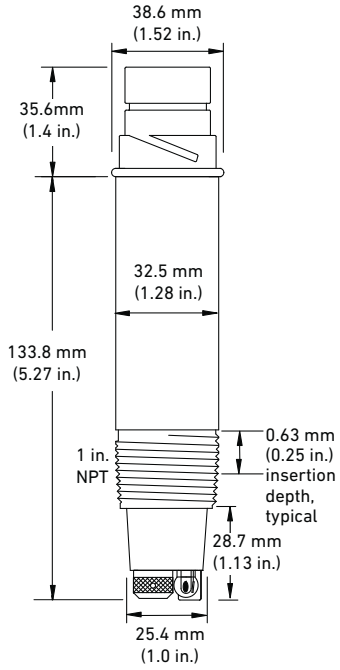

Flat and Bulb versions
have the same dimensions

Signet Model D100 DeviceLink

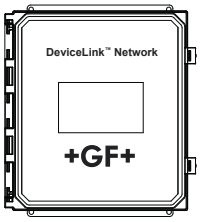

System Overview

Panel Mount	Pipe, Tank, Wall Mount	4 to 20 mA Output	Automation System
Signet Instruments 8900 9900 9950 with 2751 Electronics	Signet Instruments 9900 with 2751 Electronics and Rear Enclosure	2751 Sensor Electronics and Customer Supplied Chart Recorder Programmable Logic Controller or Programmable Automation Controller	2751 Sensor Electronics with 0486 Profibus Concentrator and Customer Supplied Programmable Logic Controller or Programmable Automation Controller
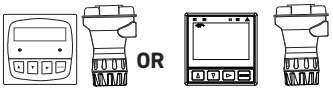	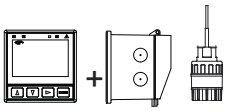	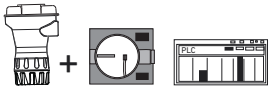	

Signet 2764-2767
DryLoc® pH/ORP Electrodes

All sold separately

In-Line Installation - Threaded fittings only	Submersible Installation - Customer supplied pipe extension or conduit with 3/4 in. NPT or ISO 7/1-R 3/4 threads
	

Electrode Key Features and Benefits

- Glass encased reference electrode protects the Ag/AgCl (silver/silver chloride) element from reacting with certain chemical compounds that typically leach into the reference chambers. Keeps the pH/ORP reading stable.
- Large volume reference electrolyte chamber resists dilution over time for a long service life. Chamber is refillable. Holds approximately 30 ml of electrolyte
- Salt Bridge serves as a double reference junction and is the first line of defense to keep out process chemicals from the reference electrolyte chamber. It is built with a porous PTFE reference junction which is highly compatible to chemicals, resists fouling and build-up of dirt.
- Ryton® body for chemical compatibility to most harsh chemicals. Also able to withstand high temperatures.
- DryLoc® connector with corrosion resistant gold pins for quick and easy sensor removal.
- Capillary TC (temperature sensor) embedded in tip of pH/ORP electrode for quick temperature response.

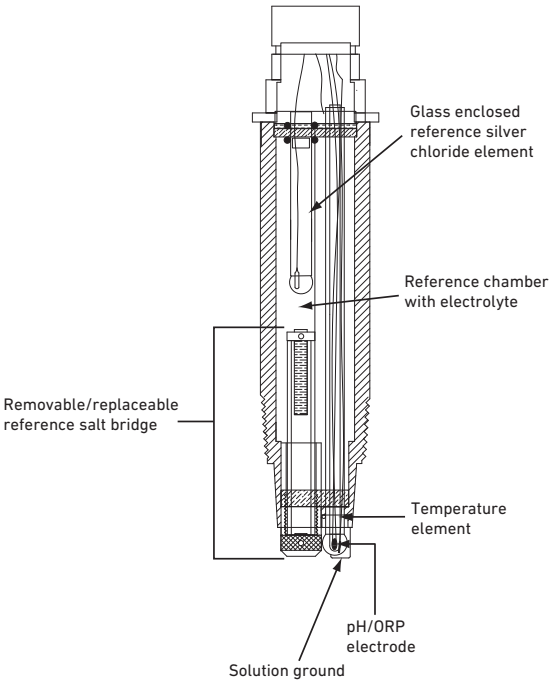

Electrode Cut-Away View

A Differential Electrode solves many common problems typically experienced by standard pH/ORP electrodes at troublesome measuring points. See the table below to find the common problem, cause and effect, and the Differential pH/ORP Electrode solution.

If the standard (Signet Models 272X or 277X) pH/ORP electrode experiences the following:	The cause and effect of the problem may be:	Use a Differential Electrode to solve the problem because:
• Reading slowly drifts over time • Sensor responds slowly	•Chemical attack from Hg^{++}, Cu^{+}, Pb^{++}, ClO_4^- or other compounds which react with or dilute the KCl reference electrolyte.	• Salt bridge will slow or stop attack. If attacking ions penetrate the salt bridge and affect the reference, simply refill reference solution
	• Reference junction gets clogged from oils, grease, or dirt from the process.	• Readings do not drift due to stable differential reference design, however may require cleaning or replacement of the salt bridge if electrode gets too dirty.
• Reading slowly drifts over time • Sensor reading becomes erratic	• Chemical attack of the Ag^+ reference billet from Br^-, I^-, CN^-, and S_2^- compounds.	• Will not affect electrode due to Ag^+ element protected in glass encased reference electrode.
	• Clogged reference and slowed reading from silver compounds forming on the inside of the reference electrode from Ag^+ of reference element reacting and precipitating Ag_2S, AgBr, AgI, AgCN, or other silver compounds.	• Will not affect electrode due to Ag^+ element protected in glass encased reference electrode
• Reading suddenly jumps to a new value • Reading unexpectedly changes	• Stray electrical currents in the process liquid; Ag^+ reference element picks up current and shifts reference reading, resulting in shifted pH reading. The Ag^+ element will eventually become totally stripped. Process must be properly grounded or place metal rod close to electrode.	• Will not affect electrode due to Ag^+ element protected in glass encased reference electrode; also, electrode has a built in solution ground, so if there is a stray current, it will not be seen by the electrode

Temperature/Pressure Graph

Note:
The pressure/temperature graphs are specifically for the Signet sensor. During system design the specifications of all components must be considered. In the case of a metal piping system, a plastic sensor will reduce the system specification.

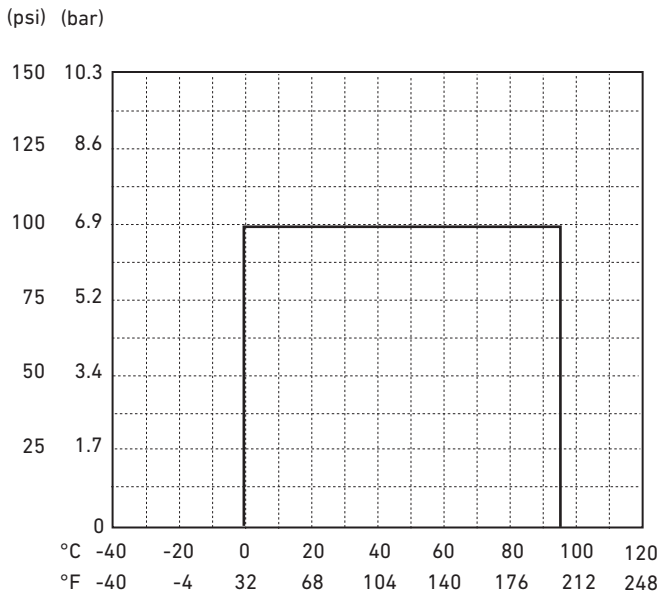

Ion	Ion Name	Ion	Ion Name	Compound	Compound Name
Br^-	Bromide	Hg^{2+}	Mercury	KCl	Potassium chloride
Cu^+	Copper iron	ClO_4^-	Perchlorate	Ag_2S	Silver sulfide
CN^-	Cyanide	Ag^+	Silver	AgBr	Silver bromide
I^-	Iodide	S^{2-}	Sulfide	AgI	Silver iodide
Pb^{++}	Lead			AgCN	Silver cyanide

Model 2764-2767
Ordering Notes

1) pH and ORP electrodes require connection to model 2751 or 2760.
2) Conduit and mounting brackets for submersible installations must always be used (customer supplied).
3) Adapters from 1 - 1½ in. are available.
4) Use sensor threads for in-line mounting; Model 2751 or 2760 threads for submersible mounting.
5) Reference electrode can be rebuilt with replacement electrolyte and salt bridge.

Application Tips

- Use the flat glass electrodes when a self-cleaning feature is desired; especially useful in applications with abrasive chemicals for in-line installations.
- Use bulb protected electrodes for low temperature applications where a fast response is required.
- ORP electrodes are generally used for chemical reaction monitoring, not control.
- Ensure sensor materials are chemically compatible with the process liquid.
- Keep electrode tip wet, avoid air pockets and sediment.

Buffer Solutions
3822-7004
3822-7007
3822-7010

Quinhydrone
3822-7115

The Signet pH buffers are ideal for calibration. The liquid solutions are conveniently packaged in one pint (473 ml) bottles. pH buffer kits in powder pillows are available for mixing fresh solutions with water at the time of use.

All pH buffers are color coded for easy identification; 4.01 pH is red, 7.00 pH is yellow, and 10.00 pH is blue. All pH buffers are traceable to NIST standards. The 4.01 and 7.00 pH buffer solutions can be used to calibrate ORP sensors when saturated with quinhydrone.

Ordering Information

Mfr. Part No.	Code	Tip Design	Temperature Element
pH Differential Electrode			
3-2764-1	**159 000 943**	Flat	3 KΩ Balco[1, 2]
3-2764-2	**159 000 944**	Flat	Pt1000[1]
3-2766-1	**159 000 949**	Bulb with protection	3 KΩ Balco[1, 2]
3-2766-2	**159 000 950**	Bulb with protection	Pt1000 RTD[1]
ORP Differential Electrode			
3-2765-1	**159 000 946**	Flat	10 KΩ ID[1, 2]
3-2767-1	**159 000 952**	Bulb with protection	10 KΩ ID[1, 2]

[1] For use with the Multi-Parameter instruments, and Profibus Concentrator when used with the 2751 Smart Sensor Electronics. The 2751 Smart Sensor Electronics has a digital (S^3L) output which is used with the Multi-Parameter instruments. It also has a 4 to 20 mA output for connections to PLC's, data recorders, etc.

[2] The 2760 preamplifier is used for connection directly to ProPoint® and ProcessPro® series pH/ORP instrumentation.

Accessories and Replacement Parts

Mfr. Part No.	Code	Description
1220-0021	**198 801 000**	O-ring, FKM (2 required per sensor)
3-2700.395	**159 001 605**	Calibration kit: includes 3 polypropylene cups, box used as cup stand, 1 pint pH 4.01, 1 pint pH 7.00
3822-7115	**159 001 606**	20 gm bottle quinhydrone for ORP calibration (must use pH 4.01 and/or pH 7.00 buffer solutions)
3864-0001	**159 001 007**	Replacement salt bridge
3864-0002	**159 001 008**	Replacement reference electrolyte solution, 500 ml
2120-0015	**159 001 009**	CPVC adapter: 1.5 in. MNPT to 1 in. FNPT
2122-0015	**159 001 010**	PVDF adapter: 1.5 in. MNPT to 1 in. FNPT
3-0700.390	**198 864 403**	pH buffer kit (1 each 4, 7, 10 pH buffer in powder form, makes 50 ml of each)
3822-7004	**159 001 581**	pH 4 buffer solution, 1 pint (473 ml) bottle
3822-7007	**159 001 582**	pH 7 buffer solution, 1 pint (473 ml) bottle
3822-7010	**159 001 583**	pH 10 buffer solution, 1 pint (473 ml) bottle
3-2759	**159 000 762**	pH/ORP system tester kit for all pH instruments
3-2759.391	**159 000 764**	Adapter cable for use with 2751/2760
3800-5000	**159 838 107**	3.0M KCl storage solution for pH and ORP, 1 pint (473 ml) bottle
3-2700.398	**159 001 886**	Lubricant kit

Signet 2774-2777 DryLoc® pH/ORP Electrodes

General Purpose/High Performance

Flat Glass | Protected Bulb

The Signet 2774-2777 pH and ORP electrodes are high performance sensors ideal for a wide range of applications. The unique foul-proof DryLoc® connector with gold-plated contacts is designed specifically for use with the Signet 2751 pH/ORP Smart Sensor Electronics or the 2760 Preamplifier. These dependable and highly responsive electrodes feature a PTFE double reference junction with potassium nitrate (KNO_3) in the front chamber to block various poisoning ions such as Copper (CU^{2+}), Lead (Pb^{2+}), Mercury (Hg^{2+}), and a large reference chamber that combine to extend the service ife.

The positioning of the temperature element embedded in the pH sensing tip allows the temperature response to be quick and accurate. The electrodes are offered with either flat or bulb style sensing elements. The flat versions allow sediment and particles to sweep past the measurement surface, minimizing risks of abrasion, breakage and coating. The bulb versions can be used for low temperature applications or where fast response is required. Due to the specially designed chambers which keep electrolyte in place, all sensor models can be installed at any angle, even inverted.

The quick temperature response is available in either a Pt 1000 or 3KΩ temperature sensor and allows compatibility with all Signet pH/ORP instruments.

Features

- **Double reference PTFE junction to block various poisoning ions and resist fouling and dirt buildup**
- **Ryton (PPS) body for broad range of chemical compatibility**
- **Memory chip enabled for access to a wide range of unique features when connected to the Signet 2751 pH/ORP Smart Sensor Electronics**
- **Patented DryLoc® connector with gold plated contacts***
- **Special design allows for installation at any angle, even inverted or horizontal**
- **Temperature sensor (pH)**
- **Quick temperature response**
- **Easy sensor replacement using DryLoc electrode connector**
- **High temperature versions available**
- **Mounts into standard ¾ inch threads**
- **Compatible with all Signet instruments**

Applications

- **Water Treatment & Water Quality Monitoring**
- **Cooling Towers and Boiler Protection**
- **Aquatic Animal Life Support Systems**
- **Pool and Spa Control**
- **Neutralization Systems**
- **Process Control**

*U.S. Patent No.: 6,666,701

Specifications

General			
Compatibility	Signet Models 2751 and 2760		
Operating Range	2774/2776	0 to 14 pH	
	2775/2777	±2000 mV (ORP)	
Process Connection	¾ in., for use in reducing tees up to 4 in.		
Reference	Electrolyte	KNO_3/KCl polyacrylamide gel	
	Element	Ag/AgCl	
Wetted Materials			
	Body	Ryton®	
	Reference junctions	PTFE	
	Sensing surface	pH	Glass membrane
		ORP	Platinum
	O-rings	FKM	
Max. Temperature/Pressure Rating			
Operating Temperature	0 °C to 85 °C	32 °F to 185 °F	
Max. Operating Pressure	6.9 bar	100 psi	
Higher temperature and pressure sensors are available upon request.			
Recommended Storage Temperature			
	0 °C to 50 °C	32 °F to 122 °F	
The electrode glass will shatter if shipped or stored at temperature below 0 °C (32 °F)			
The performance life of the electrode will shorten if stored at temperatures above 50 °C (122 °F)			
Mounting			
In-line/Vertical Mounting	Use the electrodes ¾ inch threads to install into pipe fitting. Electrode can be mounted at any angle.		
Submersible Mounting	Use threads on Model 2751 or 2760; requires ¾ inch NPT or ISO 7/1-R 3/4 male threaded extension.		
Temperature Sensor	pH	3 KΩ or Pt1000 RTD	
	ORP	none	
Shipping Weight			
	0.25 kg	0.55 lb	
Standards and Approvals			
	Manufactured under ISO 9001 for Quality, Made in USA from US and Imported Parts		

Dimensions

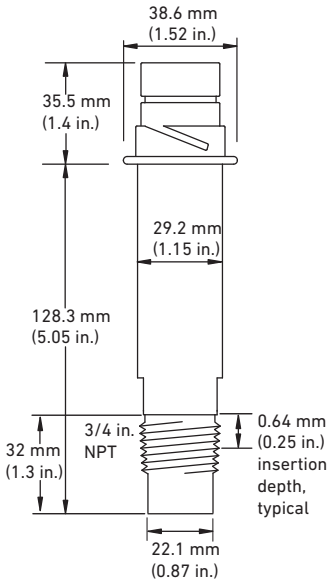

Flat Electrode

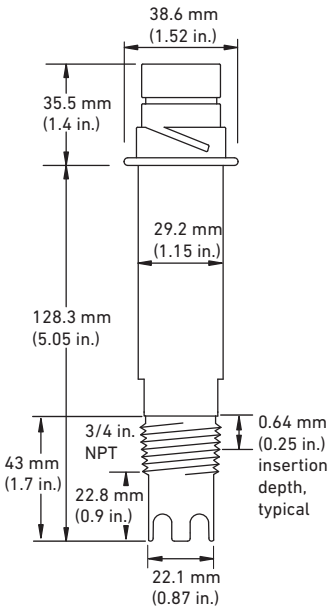

Bulb Electrode

Signet Model D100 DeviceLink

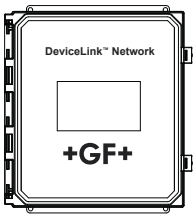

System Overview

Panel Mount	Pipe, Tank, Wall Mount	4 to 20 mA Output	Automation System
Signet Instruments 8900 9900 9950 with 2751 Electronics	Signet Instruments 9900 with 2751 Electronics and Rear Enclosure	2751 Sensor Electronics and Customer Supplied Chart Recorder Programmable Logic Controller or Programmable Automation Controller	2751 Sensor Electronics with 0486 Profibus Concentrator and Customer Supplied Programmable Logic Controller or Programmable Automation Controller

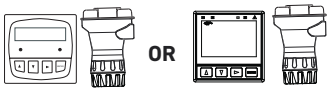

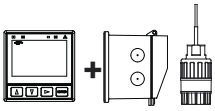

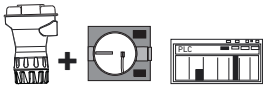

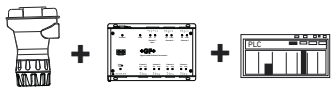

Signet 2774-2777
DryLoc® pH/ORP Electrodes

All sold separately

In-Line Installation -
Threaded fittings only

Submersible Installation -
Customer supplied pipe extension
or conduit with 3/4 in. NPT or
ISO 7/1-R 3/4 threads and pipe assembly

See Technical Reference section for assistance in choosing the correct sensor.

Electrode Key Features and Benefits

1. Ryton® body for chemical compatibility to resist most harsh chemicals. Also able to withstand high temperatures.

2. Porous PTFE junction resists fouling, chemicals, and build-up.

3. First reference chamber with KNO_3 protects Ag/AgCl wire for a prolonged sensor life.

4. Capillary TC (temperature sensor) embedded in tip of pH/ORP electrode for quicker temperature response.

5. DryLoc connector with corrosion resistant gold plated pins for quick and easy sensor removal.

6. Memory chip enabled for convenient data storage and access (calibration data, operational data, and manufacturing data), electrode health monitoring via glass impedance measurement when used in connection with the 2751 pH/ORP Smart Sensor Electronics.

7. Threads for NPT process connection into reducing tees. Use off the shelf GF reducing tees DN20 to DN100 (3/4 to 4 in.).

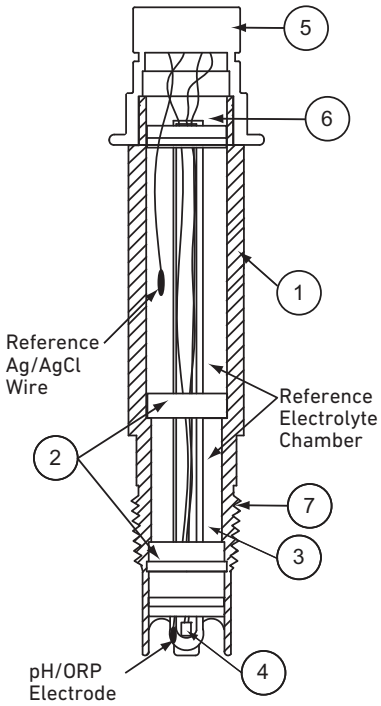

Temperature/Pressure Graph

Note:
The pressure/temperature graphs are specifically for the Signet sensor. During system design the specifications of all components must be considered. In the case of a metal piping system, a plastic sensor will reduce the system specification.

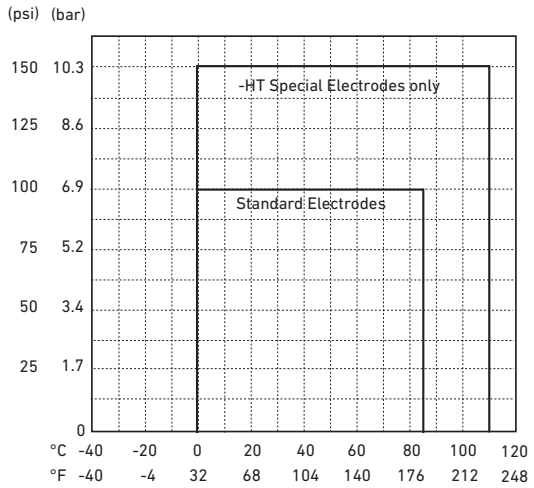

Application Tips

- Use the flat glass electrodes for in-line pH sensor applications when a self-cleaning feature is desired; especially useful in applications with abrasive chemicals in in-line applications.
- Use bulb protected electrodes for low temperature applications or where fast response is required.
- ORP electrodes are generally used for chemical reaction monitoring, not control.
- Ensure that sensor materials are chemically compatible with the process liquid.
- Keep electrode tip wet, avoid air pockets and sediment.

Model 2774-2777 Ordering Notes

1) pH and ORP sensors require connection to model 2751 or 2760.
2) Conduit and mounting brackets for submersible installation must always be used (customer supplied).
3) All of these sensors can be installed upside-down.
4) Special order options may have longer delivery time. Consult your local Georg Fischer sales representative for lead times.

Buffer Solutions

3822-7004
3822-7007
3822-7010

Quinhydrone

3822-7115

The Signet pH buffers are ideal for calibration. The liquid solutions are conveniently packaged in one pint (473 ml) bottles. pH buffer kits in powder pillows are available for mixing fresh solutions with water at the time of use.

All pH buffers are color coded for easy identification; 4.01 pH is red, 7.00 pH is yellow, and 10.00 pH is blue. All pH buffers are traceable to NIST standards. The 4.01 and 7.00 buffer solutions can be used to calibrate ORP sensors when saturated with quinhydrone.

Please refer to Wiring, Installation, and Accessories sections for more information.

Ordering Information

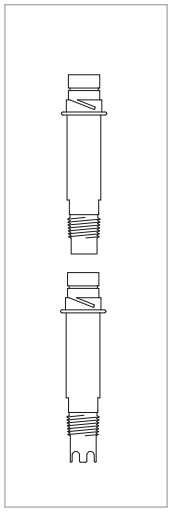

Mfr. Part No.	Code	Tip Design	Temperature Element
pH Electrodes			
3-2774	**159 000 955**	Flat	3KΩ Balco RTD[1]
3-2776	**159 000 959**	Bulb with Protection	3KΩ Balco RTD[1]
3-2774-1	**159 000 956**	Flat	Pt1000 RTD[2]
3-2776-1	**159 000 960**	Bulb with Protection	Pt1000 RTD[2]
3-2774-HT	**159 001 796**	Flat	3KΩ Balco RTD, High Temperature[4]
3-2774-HT-C	**159 001 795**	Flat	BNC connector, 3KΩ Balco RTD, NPT, High Temperature[4,5]
3-2774-HT-ISO	**159 001 794**	Flat	3KΩ Balco, High Temperature[4]
ORP Electrodes			
3-2775	**159 000 957**	Flat	10 K ID Resistor[3]
3-2777	**159 000 961**	Bulb with Protection	10 K ID Resistor[3]

[1]3KΩ Balco RTD for connection to ProPoint and ProcessPro pH/ORP instrument series when used with the 2760 preamplifier.

[2]Pt1000 RTD for connection to the 8900, 9900, 9950 or Profibus Concentrator when used with the 2751 Smart Sensor Electronics. The 2751 has a digital (S^3L) output which is used with the 8900, 9900, or 9950 transmitter, and the Profibus Concentrator. It also has a 4 to 20 mA output for connection to PLC's, data recorders, etc.

[3]10 KΩ ID resistor for connection to the 8900, 9900 or 9950 when used with the 2751 pH/ORP Smart Sensor Electronics

[4]-HT pH electrode, flat glass, high temperature (110 °C, 230 °F), 3/4" NPT, 3KΩ TC, in-line install only.
-HT-C pH electrode, flat glass, high temperature (110 °C, 230 °F), 3KΩ TC, BNC connector, NPT, 15 ft cable, no memory chip.
-HT-ISO pH electrode, flat glass, high temperature (110 °C, 230 °F), 3/4" ISO, 3KΩ TC, in-line install only.

[5]Option -HT-C can only be connected to the 2751 or 2760 sensor electronics if used with the 3-2722 BNC adapter.

Special Order Options- Please consult the factory

Accessories and Replacement Parts

Mfr. Part No.	Code	Description
3-2700.395	**159 001 605**	Calibration kit: includes 3 polypropylene cups, box used as cup stand, 1 pint pH 4.01, 1 pint pH 7.00
3822-7115	**159 001 606**	20 gm bottle quinhydrone for ORP calibration (must use pH 4.01 and/or pH 7.00 buffer solutions)
3-0700.390	**198 864 403**	pH buffer kit (1 each 4, 7, 10 pH buffer in powder form, makes 50 ml of each)
3822-7004	**159 001 581**	pH 4 buffer solution, 1 pint (473 ml) bottle
3822-7007	**159 001 582**	pH 7 buffer solution, 1 pint (473 ml) bottle
3822-7010	**159 001 583**	pH 10 buffer solution, 1 pint (473 ml) bottle
3-2759	**159 000 762**	pH/ORP system tester
3-2759.391	**159 000 764**	Adapter cable for use with 2751/2760
3-2722	**Special Order**	BNC adapter
3800-5000	**159 838 107**	3.0M KCl Storage Solution for pH and ORP, 1 pint (473 ml) bottle
3-2700.398	**159 001 886**	Lubricant kit

Signet 3719 pH/ORP Wet-Tap Assembly

3719
Assembly

2756, 2757 Wet-Tap
Electrodes
(Sold Separately)

Features

- **Electrode removal without process shutdown**
- **Space saving 45 mm (1.75 in.) short-stroke design**
- **Sealed pneumatic dampening for smooth and safe operation**
- **SafeLoc™: Cam-activated automatic locking mechanism**
- **Protects electrode sensing surface from breakage**
- **Suitable for mounting in any orientation**
- **Process threaded connection NPT or ISO**
- **Fully serviceable internal O-rings**

The Signet 3719 pH/ORP Wet-Tap allows installation and removal of pH or ORP electrodes, even under process pressure, without the need for process shutdown during routine electrode maintenance and calibration.

Process isolation is achieved during electrode retraction with two sets of double O-ring seals on a unique and compact retraction assembly; no separate valve is required.

The Wet -Tap body design allows full access to the plunger and internal O-rings, to easily perform maintenance such as lubrication/replacement of O-rings and the cleaning of the internal plunger/housing to remove material build up in difficult applications.

A patented cam-activated automatic locking mechanism, SafeLoc™, and the short stroke design help to assure operator safety. The wet-tap unit can be mounted at any angle and can be used with the Signet DryLoc® Wet-Tap electrodes.

Applications

- **Aquatic Animal Life Support Systems**
- **Recreational Water Monitoring**
- **Water & Wastewater Treatment**
- **Effluent Monitoring**
- **Neutralization Systems**
- **Sanitization Systems**
- **Pool and Spa Control**

NOTE:
This product is assembled using Synthetic grease with PTFE.

Specifications

General		
Compatible DryLoc® Electrodes	2756-WTP, 2756-WTP-1	plastic
	2757-WTP	plastic
Process Connection	3719-11	NPT 1½ in.
	3719-21	NPT 2 in.
	3719-12	ISO 7/1 - R 1.5
	3719-22	ISO 7/1 - R 2
Maximum Flow Velocity	3 m/s	10 ft/s
Materials		
Retraction Housing (Wetted)	CPVC	
O-rings (Wetted)	FKM (O-Rings are lubricated with Super Lube multi-purpose grease with PTFE)	
Locking Shroud	PVC	
Hardware	316 stainless steel	
Max. Temperature/Pressure Rating		
Operating Pressure	100 psi (6.9 bar) maximum @ 25 °C	
Shipping Weight		
	1.2 kg	2.7 lb
Standards/Approvals		
	Made in USA from US and Imported Parts	
	Manufactured under ISO 9001 for Quality, ISO 14001 for Environmental Management and OHSAS 18001 for Occupational Health and Safety	

See Temperature and Pressure graphs for more information

Signet Model D100 DeviceLink

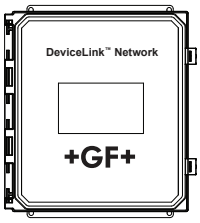

System Overview

Panel Mount	Pipe, Tank, Wall Mount	4 to 20 mA Input	Automation System
Signet Instrument 8900 9900 9950 with 2751 Sensor Electronics	Signet Instruments 9900 with 2751 Electronics and Rear Enclosure	2751 Sensor Electronics and Customer Supplied Chart Recorder, Programmable Logic Controller, or Programmable Automation Controller	2751 Sensor Electronics with 0486 Profibus Concentrator and Customer Supplied Programmable Logic Controller or Programmable Automation Controller

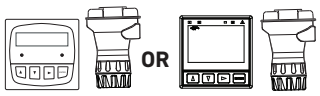

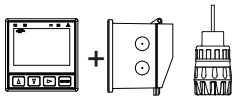

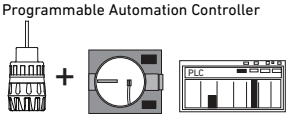

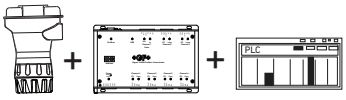

Signet Model 3719 Wet-Tap Assembly
with Wet-Tap Electrode 3-2756-WTP
or 3-2757-WTP

All sold separately

Customer supplied tees and fittings

Dimensions

Assembly 3719-1X
For pipe sizes 2½ in. to 4 in.
(DN65 to DN100)

Assembly 3719-2X
For pipe sizes 6 to 12 in.
(DN150 to DN300)

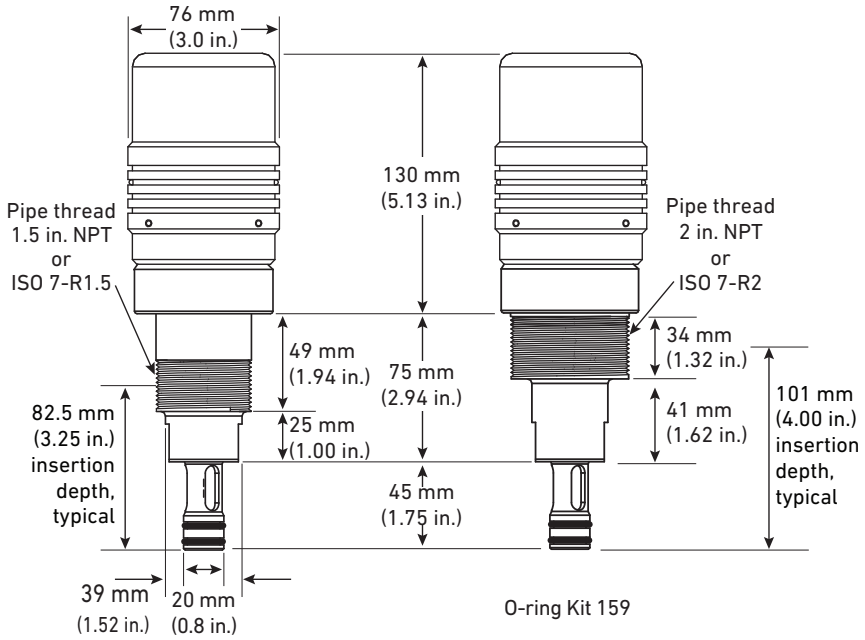

Temperature/Pressure Graph

Note:
The pressure/temperature graphs are specifically for the Signet sensor. During system design the specifications of all components must be considered. In the case of a metal piping system, a plastic sensor will reduce the system specification.

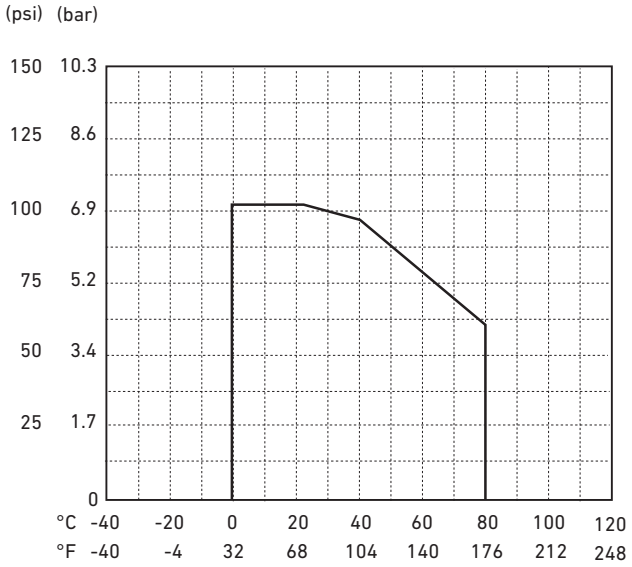

Ordering Information

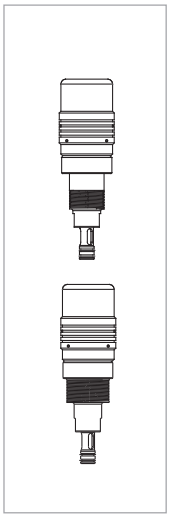

Wet-Tap Assembly

Mfr. Part No.	Code	Process Thread Connection	For Pipe Size
3-3719-11	**159 000 804**	1½ inch NPT	2½ to 4 in. (DN65-DN100)
3-3719-12	**159 000 806**	ISO 7/1-R 1.5	2½ to 4 in. (DN65-DN100)
3-3719-21	**159 000 805**	2 inch NPT	6 to 12 in. pipes (DN150-DN300)
3-3719-22	**159 000 807**	ISO 7/1-R 2	6 to 12 in. pipes (DN150-DN300)

Ordering Information

1) Use a mounting saddle or a standard threaded part to mount Wet-Tap assembly.
2) ASTM fittings are available to order; metric fittings are customer supplied.
3) Use -11 or -12 versions for pipe sizes 2½ in. to 4 in. (DN65-DN100)
4) Use -21 or -22 versions for pipe sizes 6 in. to 12 in. (DN150-DN300)

Accessories and Replacement Parts

Mfr. Part No.	Code	Description
3-3719.392	**159 310 304**	O-ring service kit
3-3719.390	**159 000 855**	3719 locking shroud (spare part)

Signet 2756-2757 pH/ORP Wet-Tap Electrodes

The Signet 2756-2757 Wet-Tap pH and ORP electrodes are general purpose sensors ideal for a wide range of applications where the installation and removal of the electrode can be performed without the need for system shutdown.

The Signet 3719 pH/ORP Wet-Tap Assembly allows installation and removal of pH or ORP electrodes, even under process pressure, without the need for process shutdown during routine electrode maintenance and calibration. Process isolation is achieved during electrode retraction with two sets of double O-ring seals on a unique and compact retraction assembly; no separate valve is required.

The DryLoc connector with corrosion resistant gold plated contacts readily connects the sensor to the mating 2751 pH/ORP Smart Sensor Electronics or the 2760 Preamplifier. The robust polyarylsulphone (PAS) body and choice of bulb pH or flat ORP sensing elements allow a broad range of chemical compatibility for a wide range of applications.

The quick temperature response is available in either a Pt1000 or 3 KΩ temperature sensor and allows compatibility with all Signet pH/ORP instruments.

The Wet-Tap assembly unit can be mounted at any angle and can be used with the Signet DryLoc® Wet-Tap pH and ORP electrodes.

Features

- **PTFE reference junction resists fouling and chemical attack**
- **Polyarylsulphone (PAS) body for broad range of chemical compatibility**
- **General purpose bulb pH glass suitable in a wide range of applications**
- **Patented DryLoc connector with gold plated contacts**
- **Pt1000 or 3 KOhm Balco temperature element for quick temperature response**
- **Electrode removal without process shutdown when installed in the Signet 3719 pH/ORP Wet-Tap Assembly**
- **Memory chip enabled for access to a wide range of unique features when connected to the Signet 2751 pH/ORP Smart Sensor Electronics**
- **Special design allows for installation at any angle, even inverted or horizontal**

Applications

- **Aquatic Animal Life Support Systems**
- **Recreational Water Monitoring**
- **Water & Wastewater Treatment**
- **Effluent Monitoring**
- **Neutralization Systems**
- **Sanitization Systems**
- **Pool and Spa Control**

Specifications

General		
Compatibility	Signet 3719 Wet-Tap Assembly, 2751 Smart Sensor Electronics or 2760 Preamplifier	
Operating Range	pH	0 to 14 pH
	ORP	±1500 mV
Connector	CPVC	DryLoc
Temperature Sensor (pH)	Pt1000 or 3K Balco for pH	
Reference Junctions	Porous PTFE	
	Electrolyte	Saturated KCl
	Elements	Ag/AgCl
Response Time		
	pH	< 5s for 95% of signal change
	ORP	Application dependent
Impedance (pH)	< 150 MΩ @ 25 °C	
Wetted Materials		
Body	PAS (Polyarylsulphone)	
Reference Junction	Porous PTFE	
Sensing Surface	pH	Glass membrane
	ORP	Platinum
O-rings	FKM	
Connector	CPVC	
Max. Temperature Rating		
Operating Temperature	0 °C to 85 °C	32 °F to 185 °F
Recommended Storage Temperature		
	0 °C to 50 °C	32 °F to 122 °F
The electrode glass will shatter if shipped or stored at temperature below 0 °C (32 °F)		
The performance life of the electrode will shorten if stored at temperatures above 50 °C (122 °F)		
Mounting		
	Any angle is acceptable. Use with 3719 Wet-Tap assembly for mounting electrodes.	
Shipping Weight		
	0.2 kg	0.4 lb
Standards and Approvals		
	Manufactured under ISO 9001 for Quality, Made in USA from US and Imported Parts	

Dimensions

Electrodes 3-2756 Wet-Tap pH, 3-2757 Wet-Tap ORP

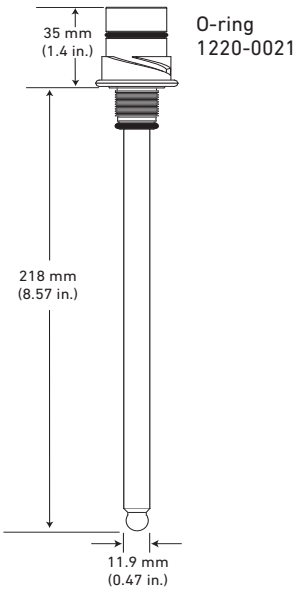

Signet Model D100 DeviceLink

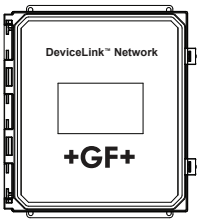

System Overview

Panel Mount	Pipe, Tank, Wall Mount	4 to 20 mA Input	Automation System
Signet Instrument 8900 9900 9950 with 2751 Smart Sensor Electronics	Signet Instruments 9900 with 2751 Smart Sensor Electronics and Rear Enclosure	2751 Smart Sensor Electronics and Customer Supplied Chart Recorder, Programmable Logic Controller, or Programmable Automation Controller	2751 Smart Sensor Electronics with 0486 Profibus Concentrator and Customer Supplied Programmable Logic Controller or Programmable Automation Controller

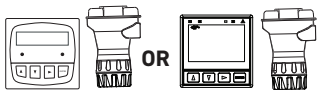

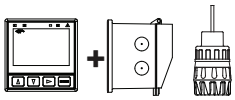

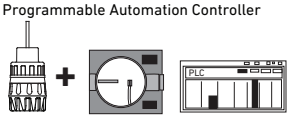

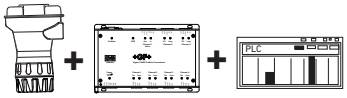

Signet Model Wet-Tap Electrode 3-2756-WTP, 3-2756-WTP-1 or 3-2757-WTP
with 3719 Wet-Tap Assembly

All sold separately

Customer supplied tees and fittings

Temperature/Pressure Graph

Note:
The pressure/temperature graphs are specifically for the Signet sensor. During system design the specifications of all components must be considered. In the case of a metal piping system, a plastic sensor will reduce the system specification.

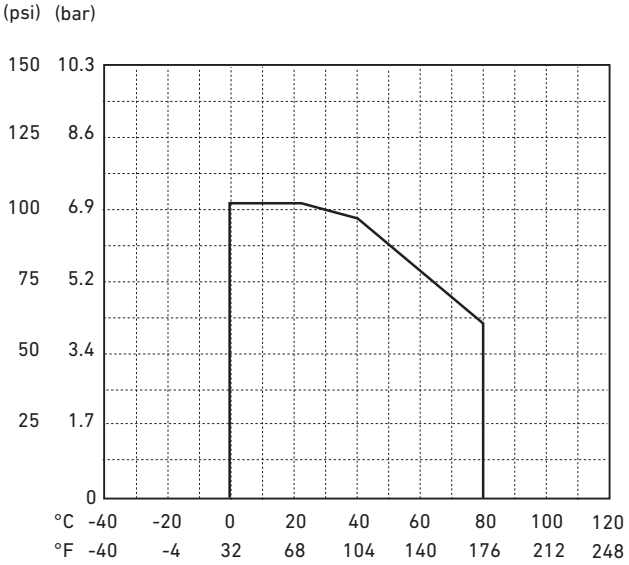

Product Selection Guide

Step 1 - Choose sensor
Step 2 - Choose sensor electronics
Step 3 - Choose Wet-Tap assembly
Step 4 - Choose a customer supplied mounting option

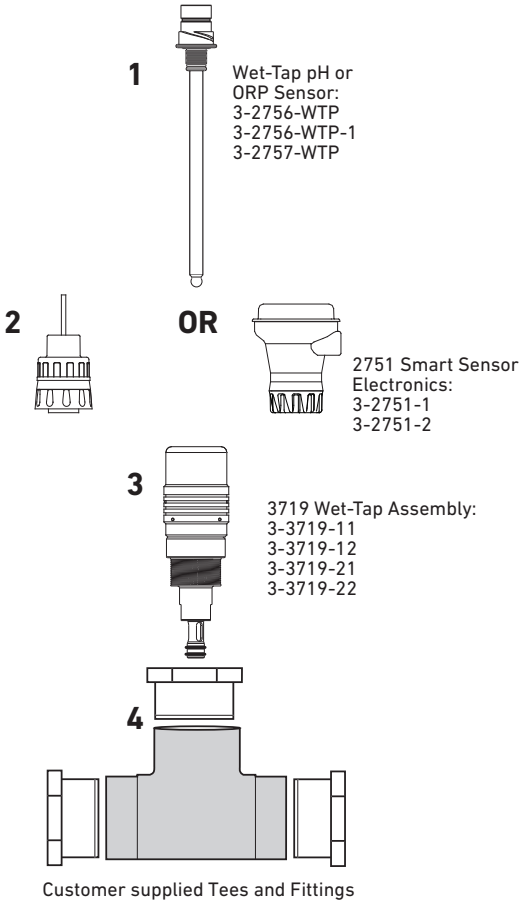

Ordering Information

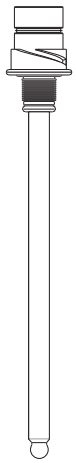

Mfr. Part No.	Code	Tip Design	Temperature Element	Use With
DryLoc pH Electrodes				
3-2756-WTP	**159 001 390**	Bulb	Pt1000	2751 Smart Sensor Electronics*
3-2756-WTP-1	**159 001 384**	Bulb	3 KΩ Balco	2751 or 2760 Preamplifier**
DryLoc ORP Electrodes				
3-2757-WTP	**159 001 391**	Flat	N/A	2751 Smart Sensor Electronics* or 2760 Preamplifier**

*The 2751 Smart Sensor Electronics has a digital (S^3L) output which is used with the 8900, 9900 or 9950 instruments, and the Profibus Concentrator. It also has a 4 to 20 mA output for connections to PLC's, data recorders, etc.

**The 2760 preamplifier is used for connection directly to older Signet analog transmitters.

Model 2756-2757
Ordering Notes
1) pH and ORP electrodes require connection to model 2751-1 or 2751-2 or 2760-X1

Accessories and Replacement Parts

Mfr. Part No.	Code	Description
3-2700.395	**159 001 605**	Calibration Kit: includes 3 polypropylene cups, box used as cup stand, 1 pint pH 4.01, 1 pint pH 7.00
3822-7115	**159 001 606**	20 gm bottle quinhydrone for ORP calibration (must use pH 4.01 and/or pH 7.00 buffer solutions)
Other		
1220-0114	**159 000 854**	3719 O-ring, FKM (spare part)
3-0700.390	**198 864 403**	pH buffer kit (1 each 4, 7, 10 pH buffer in powder form, makes 50 ml of each)
3822-7004	**159 001 581**	pH 4 buffer solution, 1 pint (473 ml) bottle
3822-7007	**159 001 582**	pH 7 buffer solution, 1 pint (473 ml) bottle
3822-7010	**159 001 583**	pH 10 buffer solution, 1 pint (473 ml) bottle
3-2759	**159 000 762**	pH/ORP system tester kit for all pH instruments
3-2759.391	**159 000 764**	Adapter cable for use with 2751 and 2760
3800-5000	**159 838 107**	3.0M KCl storage solution for pH and ORP, 1 pint (473ml) bottle
3-2700.398	**159 001 886**	Lubricant kit

MK721 Wet-Tap pH/ORP Assemblies

pH/ORP >>

Wet-Tap pH/ORP assemblies are ideal for hard to reach applications. Its ¾ in. diameter allows insertion into narrow tank openings, flow lines, and gives greater stability in highly agitated vessels.

Maintenance time is reduced, since there is only one active element to be serviced, and it is readily accessible, requiring no tools for removal.

Application Notes
Wetted materials of construction are 316 stainless steel and CPVC, with double O-ring seals of EPR (EPDM). The outer O-ring absorbs any chemical attack, allowing the inner to provide reliable sealing in a protected environment. A 124 mm (5 in.) long cartridge containing a combination pH or ORP sensor, snaps into the end of the stainless steel body. TC elements are potted in the body itself.

SAP Material Number 150 301 002

MK7XX

MK7 Wet-Tap Assembly Complete with Electrode	
21	316 L Stainless Steel Wet-Tap pH Sensor Assembly with 1 in. SS ball valve
23	316 L Stainless Steel Wet-Tap ORP Sensor Assembly with 1 in. SS ball valve

Replacement Electrodes	
P71733-1	pH Replacement Electrodes for MK 721
P72733-1	ORP Replacement Electrodes for MK 723

Example Part Number

MK721

pH Wet-Tap assembly, Stainless Steel with sensor and 1 in. Stainless Steel ball valve.

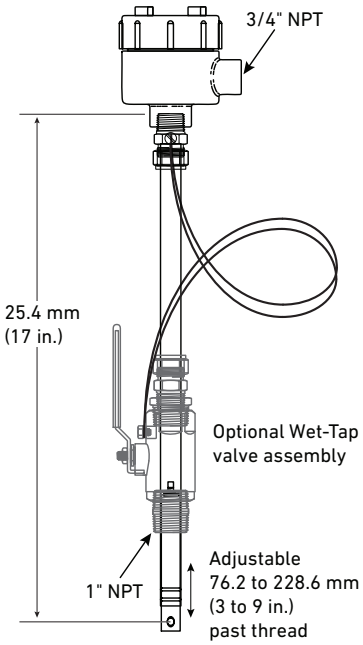

The Wet-Tap electrode can be wired to the 2751 pH/ORP electronics using the 2722 BNC to DryLoc® adapter.

2722 BNC to DryLoc adapter

Max. Temperature/Pressure Rating		
Standard Sensor		100 PSIG @ 100 °C
Sensor Only		with Ball Valve Removed
Valve Assembly		50 PSIG @ All Temperatures
Wetted Materials		
Body		316 Stainless Steel
Sensor	pH	CPVC, PVDF Junction
	ORP	CPVC, PVDF Junction, Platinum pin
O-rings		EPR (EPDM)
Connections		
	Sensor	pH Process ¾ in. NPT
	Valve	1 in. NPT

Electrical		Requires the 3-2722 to connect to pH/ORP electronics.	
Temperature Compensation			
	pH Wet-Tap	3K Balco	
	ORP Wet-Tap	10 KΩ ID Resistor	
Shipping Weight			
	Wet-Tap assembly	2.27 kg	5.0 lb
	pH electrode	0.22 kg	0.49 lb
	ORP electrode	0.22 kg	0.49 lb
Standards and Approvals			
		CE, Made in USA from US and Imported Parts	

Special order products may not meet all of the specifications of the standard sensor assemblies.

Electrode Date Code

- The electrode date code indicates the manufacturing date of the electrode.
- Electrodes should be put into service as soon as possible and should not remain in the box for more than two years.
- Over time, the storage solution (found in the "boot" covering the electrode tip) will evaporate or leak, allowing the delicate sensing tip and reference junction to dry.
- To rehydrate a dry electrode, soak it in pH 4 buffer for 24 to 48 hours.
- Electrodes more than 2 years old may still be functional, but will take longer to rehydrate.
- Restoration may not be effective for severely dehydrated electrodes.

Letter = Month
N = January
M = February
L = March
K = April
J = May
H = June
G = July
F = August
E = September
D = October
C = November
B = December

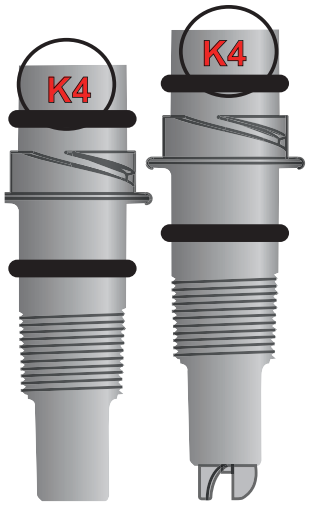

Numeral = Year
5 = 2010
6 = 2011
7 = 2012
8 = 2013
9 = 2014
0 = 2015
1 = 2016
2 = 2017
3 = 2018
4 = 2019
5 = 2020
6 = 2021

Example: K4 = manufactured in April 2019

Recommended Storage Temperature

pH/ORP electrodes..... 0 °C to 50 °C (32 °F to 122 °F)

- The electrode glass will shatter if shipped or stored at temperatures below 0 °C (32 °F).
- The performance life of the electrode will be shortened if stored at temperatures above 50 °C (122 °F).

Signet pH/ORP Buffer Solutions

The Signet pH buffers are ideal for many calibration requirements. The liquid solutions are conveniently packaged in one pint bottles; the powder pillows are packaged in low weight, single-use containers which can be mixed with water. All pH buffers are color coded for easy identification; 4.01 pH is red, 7.00 pH is yellow, and 10.00 pH is blue.

The pH buffers are traceable to NIST standards and certificates are available upon request. They are accurate to within ±0.01 pH units @ 25 °C and have long term stability.

These solutions are temperature sensitive and are provided with temperature correction values for the most accurate calibration. For applications that require ORP calibration, the pH 4 and pH 7 buffers can be mixed with quinhydrone powder for the correct measurement values of +264 mV and +87 mV respectively.

Features

- **NIST traceable**
- **Easily identifiable color coded buffer solutions**
- **Liquid or powder versions**
- **Temperature compensated values**
- **Kits for easy use**

Calibration Tips

1. The pH and ORP solutions can be used for calibrating more than one sensor within a day. However, the solutions must remain free of debris and must not be diluted by rinse water from previous calibrations.
2. ORP solutions made with quinhydrone are very unstable and may not read properly once exposed to air for a prolonged time. These solutions must be disposed of within an hour.
3. All other calibration solutions must be disposed of at the end of one day. Proper disposal is simply done by running tap water while pouring the used solutions slowly down the drain or per local requirements.
4. Use tap or deionized water to rinse the solutions off of the sensors.

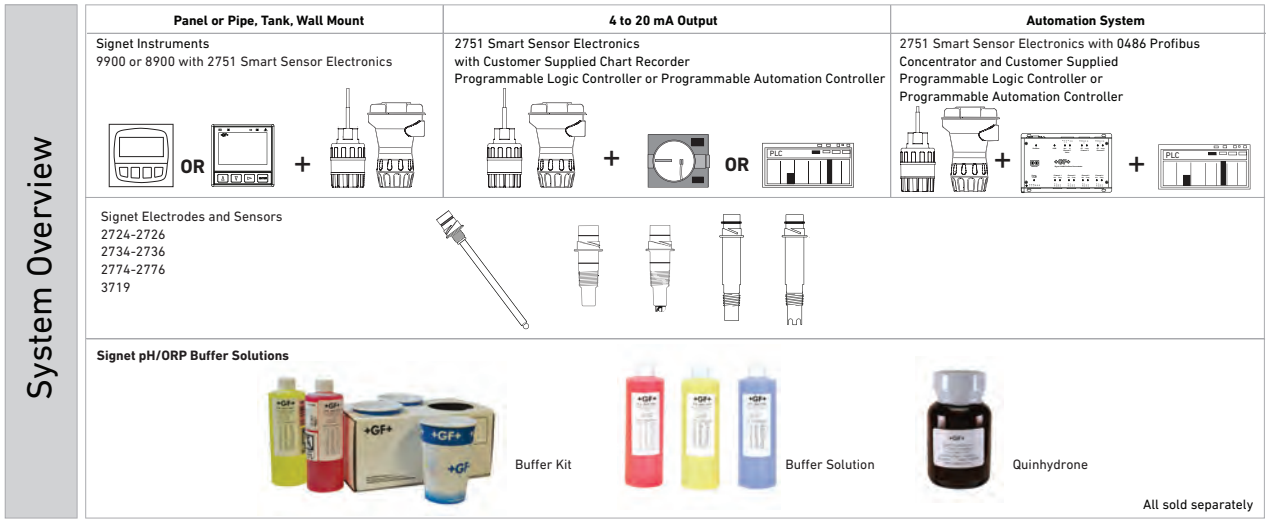

Understanding pH and ORP Calibration

Why do electrodes need to be calibrated?
Calibration ensures the pH or ORP electrode continues to function properly and accurately. pH and ORP electrode readings vary over time due to changes in reference voltage or aging of the pH glass. pH electrode output decreases with age, coating, elevated temperatures and pH glass erosion (by abrasion, and strong sodium hydroxide (NaOH), potassium hydroxide (KOH) or hydrofluoric acid (HF) solutions).

Calibration helps to identify when the electrode is worn out and needs to be replaced.

How often should an electrode be calibrated?

• **New applications** Weekly calibration is recommended for a new process where a pH or ORP electrode has never been installed. If the electrode calibrates within acceptable limits* over the next few weeks, change the calibration schedule to once every two weeks and continue to extend the schedule to meet your needs.

• **Existing applications** It is recommended the electrode be calibrated at least every month to ensure proper function* of the electrode.

• **Critical applications** In locations where measurement accuracy is extremely critical, the electrode should be calibrated as frequently as required for proper performance*.

• **Dirty applications** In applications where the electrode needs frequent cleaning, the electrode should be calibrated after each cleaning to ensure proper functionality*.

Why do some electrodes need frequent calibration while others need calibration every month?

If a process plant has a variety of processes within the facility, a calibration schedule needs to be determined for sensors placed in each type of process liquid.

- Clean applications, like drinking water, are rarely a problem for pH or ORP measurements and calibration is typically required every month.
- If the process solution contains high concentrations of chemicals, elevated temperature and/or pressure, or has many suspended solids, it is common to calibrate once every one or two weeks.
- For dirty process liquid applications, an electrode should be cleaned before calibrating.

What calibration solutions should be used?

pH calibration:
- Two pH buffer solutions should be used and need to be at least 3 pH units apart
- Use pH 7.00 and pH 4.01 solutions if the normal measurement value is less than 7 pH
- Use pH 10 and pH 7 if the normal measurement value is greater than 7 pH

ORP two point calibration:
- ORP calibrations are performed similar to pH calibrations using one or two solutions at different values.
- A pH 4 buffer solution saturated with quinhydrone will generate +264 mV while a pH 7 buffer saturated with quinhydrone will generate +87 mV.

Note: Quinhydrone solutions will last only for a short time (one hour or less). Also note that Signet EasyCal function only works with these two values.

* Sensors are good when a new electrode reads very close to the theoretical value (±0.25 pH). A used pH electrode may read as far off as ±0.84 pH before it needs to be replaced. If the pH readings in all buffers have shifted greater than 0.84 pH units (for example, electrode is reading 4.85 in a 4 buffer and 7.85 in a 7 buffer) or if the millivolt offset for pH/ORP sensors is extreme (outside of ±50 mV) in both pH/ORP solutions), a problem with the reference electrode is indicated and the electrode should be replaced.

Ordering Information

Mfr. Part No.	Code	Description
3-2700.395	**159 001 605**	Calibration kit; includes 3 polypropylene cups, box used as cup stand, 1 pint pH 4.01, 1 pint pH 7.00
3822-7115	**159 001 606**	20 gram bottle quinhydrone for ORP calibration
3822-7004	**159 001 581**	*pH 4.01 buffer solution, 1 pint (473 ml) bottle
3822-7007	**159 001 582**	*pH 7.00 buffer solution, 1 pint (473 ml) bottle
3822-7010	**159 001 583**	*pH 10.00 buffer solution, 1 pint (473 ml) bottle
3-0700.390	**198 864 403**	*pH buffer kit (1 each 4, 7, 10 pH buffer in powder form, makes 50 ml of each)
3800-5000	**159 838 107**	3.0M KCl storage solution for pH and ORP, 1 pint (473ml) bottle
Special Request		NIST Traceable Certificate (liquids only)

* Safety Data Sheets (SDS) are available online at www.gfpiping.com

Signet 2751 DryLoc® pH/ORP Smart Sensor Electronics

In-line
2751-1

In-line EasyCal
2751-2

Submersible
2751-3 or 2751-4

DryLoc® Electrodes sold separately

The Signet 2751 pH/ORP Smart Sensor Electronics featuring the DryLoc® connector, is the solution for field-free calibration, out of range glass impedance and broken glass detection, alerting the operator to probe failure or maintenance needs.

The 2751 features two different outputs: a two-wire 4 to 20 mA loop output with optional EasyCal function or a digital (S^3L) output which allows for longer cable lengths and is compatible with all Signet 8900, 9900 and 9950* instruments or in blind, 4 to 20 mA.

The Smart Sensor Electronics will allow for calibration of electrodes in a laboratory setting and installation of pre-calibrated probes in the field, reducing system downtime. Memory chip enabled electrodes will store operational data such as minimum and maximum pH/mV readings, runtime, minimum and maximum temperature (pH only), for troubleshooting and operational evaluation. To take full advantage of all features and benefits of the 2751, use with Signet 9900 (Generation IV or later), 9950 Transmitter or 0486 Profibus Concentrator.

The 2751 self-configures for pH or ORP operation via automatic recognition of the electrode type. The optional EasyCal feature allows simple push-button calibration and includes an LED indicator for visual feedback.

The 2751 submersible Smart Sensor Electronic can also be used in-line when used with the 3/4" or 1" threaded sensors including the 272X, 273X, 275X, 276X and 277X series of electrodes. The 2751 in-line sensor electronics can be used with Signet fittings up to DN100 (4 in.) and Wet-Tap assemblies.

*Users of 9950 Gen I and 9950 (Gen 2a) should update to 9950 (Gen 2b) to take full advantage of the 2751 features and benefits.

Features

- **Probe health monitoring, glass impedance and broken glass detection**
- **Memory chip interface that allows for transferable calibration, runtime data, and manufacturing information**
- **In-line integral mount and submersible installation versions**
- **Automatic temperature compensation**
- **Auto configuration for pH or ORP operation**
- **Optional EasyCal calibration aid with automatic pH buffer recognition for 4, 7 and 10 pH and ORP solutions: quinhydrone saturated pH 4 or 7 buffers and Light's Solution +469 mV**
- **Junction boxes for convenient wiring**
- **Patented DryLoc® connector provides a quick and secure connection to the sensor**

Applications

- **Water and Wastewater Treatment**
- **Neutralization Systems**
- **Scrubber Control**
- **Effluent Monitoring**
- **Surface Finishing**
- **Flocculent Coagulation**
- **Heavy Metal Removal and Recovery**
- **Toxics Destruction**
- **Sanitization Systems**
- **Pool & Spa Control**
- **Aquatic Animal Life Support Systems**

*U.S. Patent No.: 6,666,701

Specifications

General				
Compatible Electrodes				
	Signet DryLoc® pH and ORP Electrodes, Models 2724-2726, 2734-2736, 2756-2757 Wet-Tap, 2764-2767, 2774-2777			
Operating Range	pH		-1 to 15 pH	
	ORP		±2000 mV	
Response Time	pH		< 6 sec. for 95% of change	
	ORP		Application dependent	
Materials	In-line		PBT (thermal plastic polyester) and polypropylene (retaining nut)	
	Submersible		CPVC	
Electrical				
Cable	4.6 m	15 ft	3-conductor shielded (3-2751-1 in-line and the 3-2751-3 or -4 submersible sensor electronics only)	
	22 AWG		For 9900, 9950 and 4 to 20 mA max. cable length is 305 m (1000 ft). For 8900, please refer to the Cable Calculation Table of the Signet catalog for max. cable length.	
Power	12 to 24 VDC		±10%, regulated for 4 to 20 mA output	
	5 to 6.5 VDC		±5% regulated recommended, 3 mA max., for digital (S^3L) output	
Current Output	pH		Fixed 4 to 20 mA, isolated, = 0 to 14 pH (custom scaling available with 0252 tool)	
	ORP		Fixed 4 to 20 mA, isolated, = -1000 to +2000 mV (custom scaling available from ± 2000 mV with 0252 tool)	
Max Loop Resistance	100 Ω max. @ 12 V		325 Ω max. @ 18 V	600 Ω max. @ 24 V
Accuracy	±32 µA			
Resolution	±5 µA			
Update Rate	0.5 seconds			
Error Indication	3.6 mA, 22 mA, or none			
Digital (S^3L) Output	Serial ASCII, TTL level 9600 bps			
Accuracy	pH		± 0.02 pH @ 25 °C	± 0.02 pH @ 77 °F
	ORP		± 1.5 mV @ 25 ° C	± 1.5 mV @ 77 °F
	Temperature		≤ 0.4 °C	0.72 °F
Resolution	pH		≤ 0.01 pH	
	ORP		1.5 mV	
Update Rate	0.5 seconds			
Available Data	Raw mV, pH or ORP, Temperature (pH), Glass Impedance (pH), Minimum mV (pH), Maximum mV (pH), Minimum Temperature (pH), Maximum Temperature (pH), Model Number, Serial Number, Manufacturing Date, Runtime, Slope pH/mV, Measurement Offset, and Temperature			
Error Indication	Open input diagnostic, broken glass detection (pH), High Impedance			
Input Impedance, Z	$>10^{11}\Omega$			
Environmental				
Enclosure	3-2751-1 & -2		NEMA 4X/IP65 with electrode connected	
	3-2751-3 & -4		NEMA 6P/IP68 with electrode and watertight conduit and/or extension pipe connected	
Max. Temperature/Pressure Rating				
Operating Temperature				
Submersible	0 °C to 85 °C		32 °F to 185 °F	
In-line	0 °C to 85 °C		32 °F to 185 °F	
Storage Temperature	-20 °C to 85 °C		-4 °F to 185 °F	
Relative Humidity	0 to 95%, non-condensing (without electrode connected)			
Shipping Weight				
	2751-2		0.75 kg	1.65 lb
	2751-1, -3 & -4		0.64 kg	1.41 lb
Standards and Approvals				
	CE, FCC			
	RoHS compliant, China RoHS, Made in USA from US and Imported Parts			
	Manufactured under ISO 9001 for Quality and ISO 14001 for Environmental Management and OHSAS 18001 for Occupational Health and Safety			

Dimensions

3-2751-1

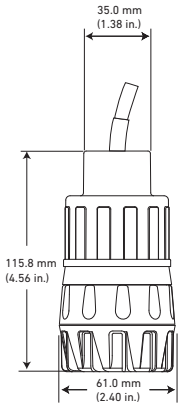

3-2751-2

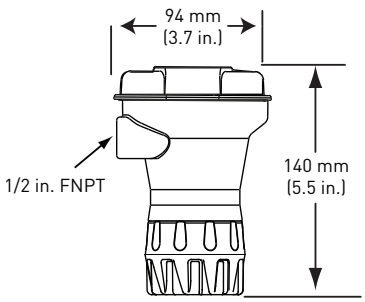

3-2751-3, -4

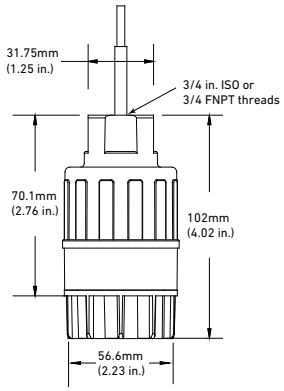

Signet Model D100 DeviceLink

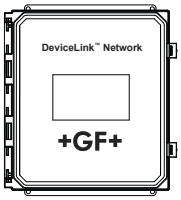

System Overview

In-Line Installation

Panel Mount	Pipe, Tank, Wall	4 to 20 mA Input	Automation System
Signet Instruments 8900 9900 9950	Signet Instrument 9900 and Rear Enclosure	3-2751 Smart Sensor Electronics and Customer Supplied Chart Recorder, Programmable Logic Controller, or Programmable Automation Controller	3-0486 Profibus Concentrator and Customer Supplied Programmable Logic Controller or Programmable Automation Controller

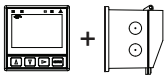

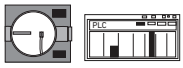

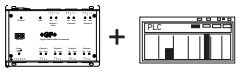

Signet 2751 Smart Sensor Electronics

Signet 2751 Smart Sensor Electronics
with Signet 3-8050-2 Universal Junction Box (EasyCal)

Signet 2751 Smart Sensor Electronics

Signet Electrodes
2724-2726
2734-2736
2764-2767
2774-2777

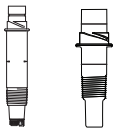

2724-2726 and 2734-2736 DryLoc Electrodes: Use GF fittings* or customer supplied 3/4 in. NPT fittings
2764-2767 and 2774-2777 DryLoc Electrodes: Use customer supplied 3/4 in. or 1 in. NPT fittings

All sold separately

Submersible Installation

Wet-Tap Installation

Panel Mount	Pipe, Tank, Wall	4 to 20 mA Input	Automation System
Signet Instruments 8900 9900 9950	Signet Instrument 9900 and Rear Enclosure	2751 Smart Sensor Electronics and Customer Supplied Chart Recorder, Programmable Logic Controller , or Programmable Automation Controller	0486 Profibus Concentrator and Customer Supplied Programmable Logic Controller or Programmable Automation Controller

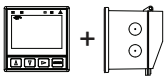

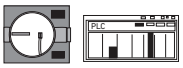

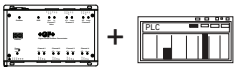

Signet 2751 Smart Sensor Electronics
with customer supplied pipe extension or conduit, 3/4 in. NPT or ISO 7/1-R 3/4 threads**

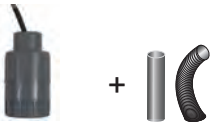

Signet 2751 Smart Sensor Electronics
with Signet Wet-Tap Electrode 2756, 2757 and Signet 3719 Wet-Tap

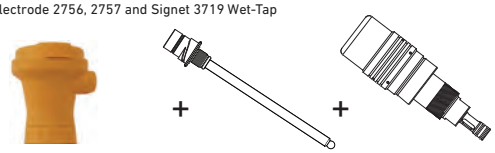

Signet Electrodes
2724-2726
2734-2736
2764-2767
2774-2777

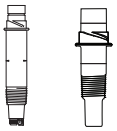

GF Tees and Fittings
see model 3719 for more info

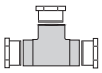

All sold separately

* See fittings section for more information.
**Refer to the Signet Submersion Kit brochure (3-0000.707) located on our website for installation suggestions and options.

2751 Product Selection Guide

1. Choose the Electrode	2724-2726, 2734-2736 Can use Any 3-272X or 273X series Electrode	2764-2767 Differential 3-2764-1 3-2764-2 3-2766-1 3-2766-2	2774-2777 ORP Electrodes must have 10K ID resistor use: 3-2775, 3-2777 pH Electrodes can be either the 1K or 3K use: 3-2774, 3-2774-1, 3-2776, 3-2776-1	2756 and 2757 Wet-Tap Can use any Wet-Tap 275X series Electrode
2. Determine the mounting style: In-line **And** -In-line fitting **Or** Submersible	2751-1 or -2 ½" to 4" Signet fitting	2751-1 or -2 2751-3 or -4 ¾" reducing tee	2751-1 or -2 2751-3 or -4 1" threaded tee	2751-1 or -2 2751-3 or -4 ¾" reducing tee	2751-1 or -2 3719 Wet-Tap Assembly (Submersible not applicable with Wet-Tap assembly)
	2751-3 or -4 and cable conduit (customer supplied) connected to ¾" sensor electronics				
3. Junction Boxes	3-8050-1: Use when extending the submersible cable over long distance. 3-8050-2: Use with the submersible 2751-3 or -4 and the in-line 2751-1 for best calibration results with the EasyCal function when using the blind 4 to 20 mA output.				
4. Choose the output instrument Digital (S^3L) **Or** 4 to 20 mA	9900 or 9950 Instruments, Profibus Concentrator, D100 DeviceLink			**OR**	PLCs or Chart Recorders

Model 2751 Ordering Information

1) Model 2751 requires 12 to 24 VDC to function as a blind 4 to 20 mA output transmitter.

2) Order a 3-2751-2 or any other 2751 with a junction box 3-8050-2 if the EasyCal feature is desired.

3) Conduit and mounting brackets for submersion installation must always be used (customer supplied).

4) The 3-2759 System Tester must be ordered with the adapter cable 3-2759.391 for exclusive use with the 2751.

5) All sensor electronics, preamplifiers and connectors require a DryLoc electrode for full system installation.

6) The 2751 Smart Sensor Electronics is compatible with all Signet 8900, 9900 and 9950 instruments. To take full advantage of the advanced features use the 9900 SmartPro Transmitters (Generation IV or greater), 9950 and 0486 Profibus Concentrator.

Application Tips

- The EasyCal feature automatically recognizes standard 4.0, 7.0, and 10.0 pH buffer or ORP quinhydrone solutions of +87 and +264 mV or Light's Solution, +469 mV, and simplifies calibration. For EasyCal ORP only single point calibration is used.

- Frequency of calibration of electrodes is dependent upon the application.

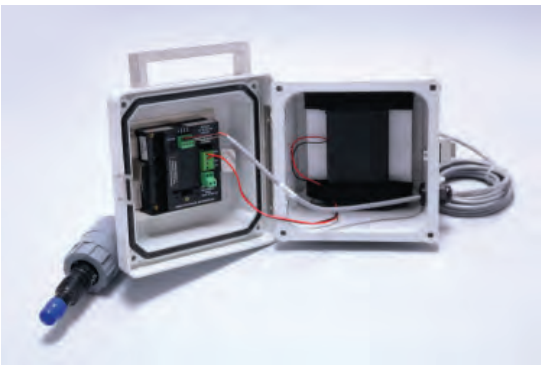

9900 pH/ORP Calibrator (150 399 007)

The 9900 battery operated calibrator is built to enhance the user experience with the new line of 2751 Smart pH/ORP sensor electronics. This unit can be kept in a lab or taken in to the field. The calibration storage capability of the pH/ORP electrodes when used with the 2751 Smart sensor electronics, allows the user the ability to rotate electrodes, meaning unplug an aged/dirty electrode replacing with a pre-calibrated electrode.

With larger installations, all collected dirty and uncalibrated electrodes can be taken to a central well organized location where proper cleaning and calibration can be performed. This improves efficiency of this process resulting more stable readings, higher sensitivity, faster response time, and overall more accurate readings. Runs on (8) AA Alkaline batteries (included).

Ordering Information

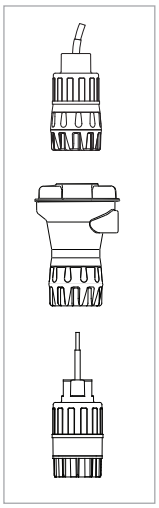

Mfr. Part No.	Code	Description
In-line Smart Sensor Electronics (Yellow body)		
3-2751-1	**159 001 804**	with 4.6 m (15 ft) cable, recommended for 9900 or 9950 instruments
3-2751-2	**159 001 805**	with junction box and EasyCal, recommended for 4 to 20 mA use
Submersible Smart Sensor Electronics (Gray body)		
3-2751-3	**159 001 806**	with 4.6 m (15 ft) cable and ¾ in. NPT threads - when 4 to 20 mA is required use the 3-8050-2 junction box with EasyCal
3-2751-4	**159 001 807**	with 4.6 m (15 ft) cable and ISO 7/1-R 3/4 threads - when 4 to 20 mA is required use the 3-8050-2 junction box with EasyCal

Sensor Electronics with preamplified signal and Digital (S^3L) output (for use with the SmartPro Instruments) or 4 to 20 mA output - power supplied to unit dictates output type.

Note:
The 2751 Smart Sensor Electronics is compatible with 8900, 9900 and 9950 SmartPro Transmitters, Signet 0486 Profibus Concentrator and D100 DeviceLink. To take full advantage of the 2751 features, use 9900 (Generation IV or later), 9950 or 0486 Profibus Concentrator.

Accessories and Replacement Parts

Mfr. Part No.	Code	Description
Calibration		
3-2700.395	**159 001 605**	Calibration kit: includes 3 polyproplyene cups, box used as cup stand, 1 pint pH 4.01, 1 pint pH 7.00
3822-7115	**159 001 606**	20 gm bottle quinhydrone for ORP calibration (must use pH 4.01 and/or pH 7.00 buffer solutions)
3-2759	**159 000 762**	pH/ORP system tester (adapter cable sold separately)
3-2759.391	**159 000 764**	2759 adapter cable for use with 2751 DryLoc sensor electronics
3-0700.390	**198 864 403**	pH buffer kit (1 each 4, 7, 10 pH buffer in powder form, makes 50 ml of each)
3822-7004	**159 001 581**	pH 4 buffer solution, 1 pint (473 ml) bottle
3822-7007	**159 001 582**	pH 7 buffer solution, 1 pint (473 ml) bottle
3822-7010	**159 001 583**	pH 10 buffer solution, 1 pint (473 ml) bottle
Mounting		
3-8050.390-3	**159 310 116**	Retaining nut replacement kit, Black Polypropylene
3-8050-1	**159 000 753**	Universal mount junction box
3-8050-2	**159 000 754**	Universal mount junction box w/EasyCal (for submersible applications, use with 3-2751-3 and -4 where 4 to 20 mA is required)
3-9000.392-1	**159 000 839**	Liquid tight connector kit, NPT (1 connector)
3-9000.392-2	**159 000 841**	Liquid tight connector kit, PG 13.5 (1 connector)
Other		
5523-0322	**159 000 761**	Sensor cable (per ft), 3-cond. plus shield, 22 AWG, black/red/white (for use with 2751)
P31515-0P200	**159 000 630**	Universal Pipe Adapter PVC
P31515-0C200	**159 000 631**	Universal Pipe Adapter CPVC
P31515-0V200	**159 000 459**	Universal Pipe Adapter PVDF
7310-1024	**159 873 004**	24 VDC power supply, 10W, 0.42 A
7310-2024	**159 873 005**	24 VDC power supply, 24W, 1.0 A
7310-4024	**159 873 006**	24 VDC power supply, 40W, 1.7 A
7310-6024	**159 873 007**	24 VDC power supply, 60W, 2.5 A
7310-7024	**159 873 008**	24 VDC power supply, 96W, 4.0 A
3800-5000	**159 838 107**	3.0 M KCl storage solution for pH and ORP, 1 pint (473 ml) bottle
3-2700.397	**159 001 870**	Protective cap for pH/ORP electrodes, 5 pieces
3-2700.398	**159 001 886**	Lubricant kit

3-2751-3-050 pH/ORP Sensor Electronics

pH/ORP >>

Submersible In-line

The Signet 2751 pH/ORP Sensor Electronics and 2760 Preamplifier/connector feature the DryLoc® connector, providing robust connection to Signet DryLoc electrodes.

The 2751 has a preamplified signal and features two different outputs: a two-wire 4 to 20 mA loop output and a digital (S^3L) output and is compatible with the Signet 8900 or 9900 instruments, or any 4 to 20 mA data logger or PLC.

The 2760 Preamplifier allows any DryLoc pH/ORP electrode to work with Signet ProcessPro® and ProPoint® instruments and instruments that do not require preamplified signals.

The 2722 must be used to connect any third party pH or ORP electrode that has a BNC connector to Signet 9900, 9950 or 8900 instruments. An external 3K or 10K resistor (not supplied) will be required.

SAP Material Number 150 301 004

3-2751-X-XXX

–	**Type of electronics**	
	3	Submersible Gray Body, ¾ in. NPT threads
	4	Submersible Gray Body, ¾ in. ISO threads
	7	In-line yellow Body, ¾ in. NPT threads
	8	In-line yellow Body, ¾ in. ISO threads
–	**Cable Length**	
	025	7.6 m (25 ft)
	050	15.2 m (50 ft)
	075	22.8 m (75 ft)
	100	30.5 m (100 ft)

Example Part Number

3-2751-3-050

pH/ORP Sensor Electronics, Submersible Gray Body with ¾ in. NPT threads and 50 ft of cable.

3-2760-X-XXX

–	**Type of electronics**	
	1	Submersible Gray Body, ¾ in. NPT threads
	2	Submersible Gray Body, ¾ in. ISO threads
	11	In-line Yellow Body, ¾ in. NPT threads
	21	In-line Yellow Body, ¾ in. ISO threads
–	**Cable Length**	
	025	7.6 m (25 ft)
	050	15.2 m (50 ft)
	075	22.8 m (75 ft)
	100	30.5 m (100 ft)

3-2722 BNC DryLoc Adapter
The 2722 DryLoc adapter is used to connect the Signet high temperature pH and ORP electrodes used in submersible applications to the 2751/2760 electronics.

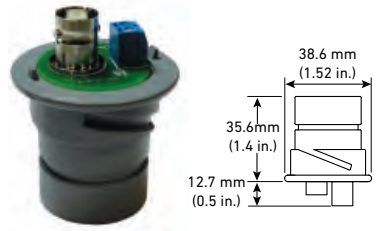

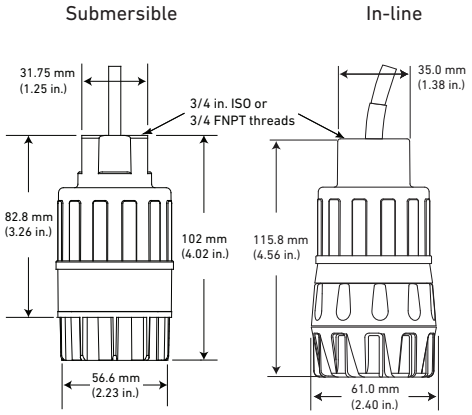

General		
Operating Range	pH	0 to 14 pH
	ORP	±2000 mV
Electrical		
Power - 2751	12 to 24 VDC	±10%, regulated for 4 to 20 mA output
	5 to 6.5 VDC	±5% regulated recommended, 3 mA max., for digital (S^3L) output
Accuracy -2751	±32 µA	
Resolution -2751	±5 µA	
Update Rate	0.6 seconds	
Max. Temperature/Pressure Rating		
Submersible	0 °C to 85 °C	32 °F to 185 °F
In-line	0 °C to 110 °C	32 °F to 230 °F
Relative Humidity	0 to 95%, non-condensing (without electrode connected)	
Storage Temperature		
	-20 °C to 85 °C	-4 °F to 185 °F
Shipping Weight		
2751-1 & -2	0.75 kg	1.65 lb
2751-3 & -4	0.64 kg	1.41 lb
Standards and Approvals		
	CE, FCC	
	RoHS compliant, China RoHS, Made in USA from US and Imported Parts	
	Manufactured under ISO 9001 for Quality and ISO 14001 for Environmental Management and OHSAS 18001 for Occupational Health and Safety	

Special order products may not meet all of the specifications of the standard sensor assemblies.

Signet pH/ORP Instrument

	D100	9950
Description	DeviceLink™ Network	Multi-Channel (2 Channel), Multi-Parameter Controller
Modular Components		Yes
Max. Sensor Inputs	Up to 12 channels, programmable for Digital (S^3L), frequency or 4 to 20 mA input, depending on package selected and (2) Modbus via 9900 or 9950.	2 frequency or S^3L inputs
Mounting Options	Panel	Panel
Display	7 in. LCD touch screen or web browser, PC, smartphone, or tablet	LCD, Dot matrix
Analog Output Types	Up to (4) passive 4 to 20 mA loop outputs	(2) Passive 4 to 20 mA Outputs, Standard Up to (6) via optional modules (optional relay module)
Max. Relays	Up to (4) Dry-Contact, programmable relay	(4) Mechanical Relays or (2) Mechanical and 2 Solid State Relays (optional relay module)
Derived Measurements	N/A	6 Derived Measurements Sum, Delta (Difference), Ratio, % Passage% Reject, % Recovery
Languages	English	English, French, German, Spanish and Simplifed Chinese
Ambient Temperature (°C) Storage Temperature (°F)	AC -10 °C to 50 °C (14 °F to 122 °F) DC -10 °C to 60 °C (14 °F to 140 °F) Display Models: -10 °C to 60 °C (14 °F to 140 °F) Storage Temp: -15 °C to 70 °C (5 °F to 158 °F)	DC -10 °C to 70 °C (14 °F to 158 °F) AC -10 °C to 60 °C (14 °F to 140 °F) -15 °C to 70 °C (5 °F to 158 °F)
Relative Humidity	0 to 99% condensing environment	0 to 95% non-condensing
Power Requirements	DC - 24 VDC nominal (10.8 to 35.2 VDC regulated) 500 mA maximum AC - 100-240 VAC, ±10%, regulated 50-60 Hz, 24 VA max	DC - 24 VDC nominal (12 to 32 VDC, ±10% regulated) AC - 100 to 240 VAC, 50 to 60 Hz, 24 V
Standards and Approvals	CE, UL, CUL, FCC, RoHS Compliant, China RoHS, NEMA 4X/IP65	CE, FCC, UL, CUL, RoHS compliant, China RoHS, NEMA TYPE 4X/IP65 (front face only on panel mount)

Specification Matrix

	9900 - Panel Mount	8900
Description	Single-Channel, Multi-Parameter Transmitter	Multi-Channel (4 or 6 Channel), Multi-Parameter Controller
Modular Components	Yes	Yes
Max. Sensor Inputs	1	6 Permanent 6 Resettable
Mounting Options	Panel, Wall, Pipe, Tank	Panel
Display	LCD with digital bar graph	LCD
Analog Output Types	(2) Passive 4 to 20 mA (1) Standard, (1) Optional with 4 to 20 mA Output module HART optional with H COMM module	(4) Passive/Active 4 to 20 mA or (4) 0 to 5/10 VDC
Max. Relays	1 open collector (standard) 2 relays (optional relay module)	up to 8 relays (via 8059)
Derived Measurements	N/A	Sum, Difference, % Recovery, % Reject, % Passage, Ratio, Power (BTU)
Languages	English	English, French, German, Spanish, Italian, and Portuguese
Operating Temperature (°C) **Operating Temperature (°F)**	-10 °C to 70 °C (14 °F to 158 °F) -15 °C to 70 °C (5 °F to 158 °F)	-10 °C to 55 °C (14 °F to 131 °F) -15 °C to 80 °C (5 °F to 176 °F)
Relative Humidity	0 to 95% non-condensing	0 to 95%, non-condensing
Power Requirements	24 VDC input; range: 10.8 to 35.2 VDC regulated	12 to 24 VDC ±10%, regulated or 100 to 240 VAC ±10%, regulated, 50/60 Hz
Standards and Approvals	CE, FCC, UL, CUL, RoHS compliant, Lloyd's Register, China RoHS, NEMA TYPE 4X/IP65 (front face only on panel mount); field mount is 100% NEMA TYPE 4X/IP65	CE, FCC, UL, CUL, RoHS compliant, China RoHS NEMA 4X/IP65 (front face only)

Signet 2759 pH/ORP System Tester

The Signet 2759 pH/ORP Simulator is a battery-powered millivolt generator that simulates pH values of 4, 7 and 10, plus ORP values of ±700 mV. This device is useful as a troubleshooting aid and for general verification of system operation. It is not a substitute for periodic system calibration with pH buffers or test solutions.

Accessory adapter cables (sold separately) enable the 2759 to connect directly to Signet 2760 preamplifiers, or 2751 pH/ORP Smart Sensor Electronics. The adapters include a selector switch for pH (3K or PT1000 Temperature Compensation) or ORP simulation. The switch triggers automatic sensor-recognition software in Signet pH/ORP instrumentation.

Features

- **Battery powered millivolt generator**
- **Simulates pH and ORP values**
- **High impedance input simulates preamplified signal**
- **Verifies system functionality**
- **Compatible with 2751 and 2760 preamplifiers**
- **Connects to all Signet instruments**
- **Verifies preamplifier or instrument electronics**

System Overview

Signet Instruments
8900 with 2751 Smart Sensor Electronics
9900 with 2751 Smart Sensor Electronics and Rear Enclosure
9950 with 2751 Smart Sensor Electronics
D100 with 2751 Smart Sensor Electronics

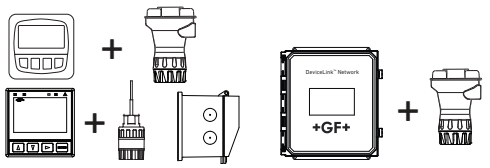

Automation System

2751 Smart Sensor Electronics with 0486 Profibus Concentrator and Customer Supplied Programmable Logic Controller or Programmable Automation Controller

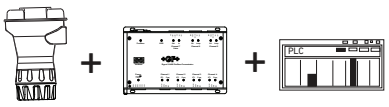

Signet 2759.391
Bypass Adapter Cable

Signet 2759
Certification Tool

All sold separately

Features

A) Power OFF button

B) Output simulation buttons and indicators
Simulate pH and ORP output at fixed values: pH 4, pH 7, pH 10, -700 mV and +700 mV. Pressing any one of these buttons turns the 2759 on.

C) Low battery indicator

D) High Ω switch
Adds 1000 MΩ resistance in series with output. Simulates high impedance of pH electrodes. Used to verify proper preamplifier operation.

E) Adapter cable
Use PN 3-2759.391 for use with the 2751 or 2760.

F) Mode selector switch
Trigger automatic sensor recognition software in Signet pH/ORP instrumentation. The three-way toggle switch positions are:
- Top = 1K for a Signet 8900/9900/9950 instrument or 2751 Smart Sensor Electronics. Compatible with Pt1000 or 3KΩ temperature element.
- Middle = 10K for ORP simulation.
- Bottom = 3K for older Signet instruments. Requires a 3KΩ temperature compensation input.

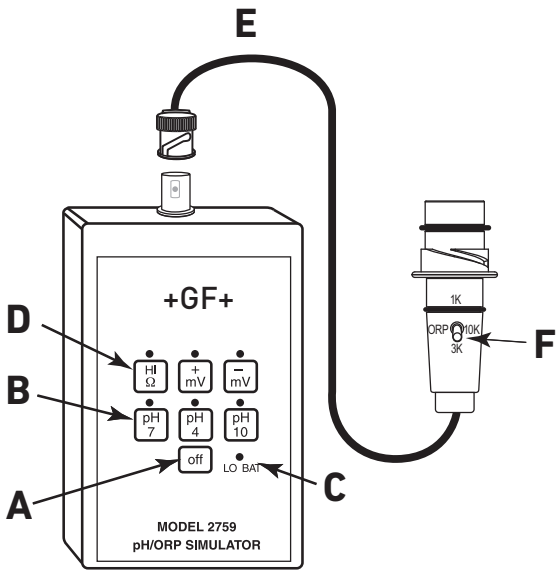

Ordering Information

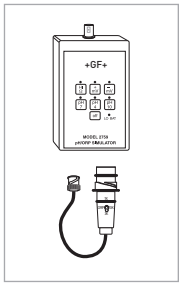

Mfr. Part No.	Code	Description
3-2759	**159 000 762**	pH/ORP System Tester Kit for all pH Instruments
3-2759.391	**159 000 764**	Adapter Cable for use with 2751 and 2760*

* required for use with the 3-2759 to test and evaluate 3-2751 and 3-2760 preamplifiers

Signet Conductivity/Resistivity Electrode Specification Matrix

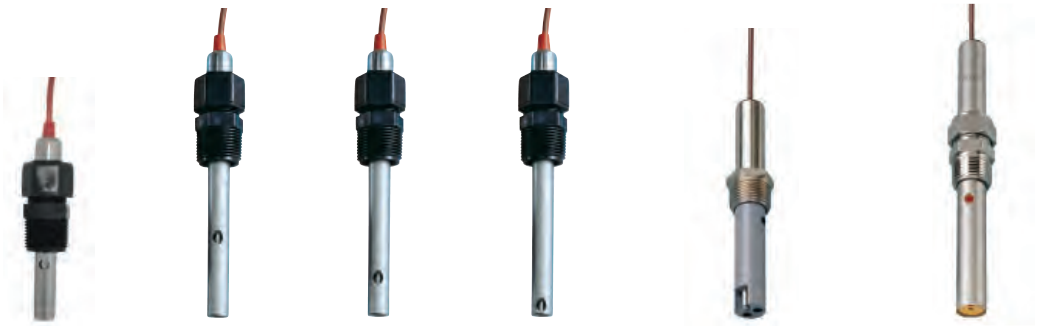

		2818	2819	2820	2821	2822	2823
Cell Constant		0.01		0.1	1.0	10.0	20.0
Operating Range		0.055 µS to 100 µS (18.2 MΩ to 10 KΩ)		1 µS to 1000 µS (1 MΩ to 1 KΩ)	10 µS to 10,000 µS	100 µS to 200,000 µS	200 µS to 400,000 µS
Compatible Sensor Electronics		2850					
Temperature Element		PT1000					
Operating Temperature/Pressure		Optional 1/2: NPT 316 SS fitting, 13.8 bar (200 psi), 120 °C (248 °F) max. Standard Polypro fitting, 6.9 bar (100 psi), 100 °C (212 °F) max.				6.9 bar (100 psi) @ 95 °C (203 °F)	6.9 bar (100 psi) @ 150 °C (302 °F)
Process Connection		¾ in. NPT					
Wetted Materials	**Body**	316 SS or Titanium*, PTFE				316 SS or Titanium*, CPVC	316 SS, PEEK®
	O-rings	EPR (EPDM)					
	Process Connection	Poly Pro (standard) , Stainless steel NPT				316 SS	
Compatible Signet Instruments		8900 via 2850, 9900 direct using conductivity module or 2850, Profibus Concentrator and D100 DeviceLink					
Applications Usage		R.O., ultrapure water, resistivity measurements		R.O., deionized and distilled water	R.O., distilled & drinking water, cooling tower water	R.O., cooling tower water, waste water, salinity, brackish water, sea water	R.O., salinity, brackish water, sea water, acids/ bases, cleaners other concentrated chemicals
Standards and Approvals		RoHS compliant, China RoHS					

*Titanium available as a standard for all sanitary sensors and as a special order for all other sensors.

		2839-1V	2840-1V	2841-1V	2842-1V
Cell Constant		0.01	0.1	1.0	10.0
Operating Range		0.055 µS to 100 µS (18.2 MΩ to 10 KΩ)	1 µS to 1000 µS (1 MΩ to 1 KΩ)	10 µS to 10,000 µS	100 µS to 200,000 µS
Compatible Sensor Electronics		2850			
Temperature Element		PT1000			
Operating Temperature/Pressure		-10 °C to 85 °C @ 6.9 bar (14 °F to 185 °F @ 100 psi)			
Process Connection		-1V versions: ¾ in. NPT or -1VD versions: ISO 7/1-R 3/4			
Wetted Materials	**Body**	PVDF			
	O-rings	FKM			
	Process Connection	PVDF			
Compatible Signet Instruments		8900 via 2850, 9900 direct using conductivity module or 2850, Profibus Concentrator, 9950 and D100 DeviceLink			
Applications Usage		R.O., ultrapure water, resistivity measurements	R.O., deionized and distilled water	R.O., distilled water, condensate, drinking water, cooling tower water	R.O., cooling tower water, wastewater, salinity, brackish water, sea water
Standards and Approvals		RoHS compliant, China RoHS			

Signet Conductivity/Resistivity Sanitary Specification Matrix

		Sanitary		
		2819	**2820**	**2821**
Cell Constant		0.01	0.1	1.0
Operating Range		0.055 µS to 100 µS (18.2 MΩ to 10 KΩ)	1 µS to 1000 µS	10 µS to 10,000 µS
Compatible Sensor Electronics		2850		
Temperature Element		PT1000		
Operating Temperature/Pressure		5.2 bar (75 psig) max., 130 °C (266 °F) max.		
Wetted Materials	**Body**	316 SS or Titanium. Material and surface finish > RA 25 for all sensors		
	O-rings	EPR (EPDM)		
	Process Connection	1-1½ in. or 2 in. Sanitary Tri-Clamp		
Compatible Signet Instruments		8900 via 2850, 9900 direct using conductivity module or 2850, Profibus Concentrator, 9950 and D100 DeviceLink		
Applications Usage		R.O., ultrapure water, resistivity measurements	R.O., deionized and distilled water	R.O., distilled & drinking water, cooling tower water
Standards and Approvals		RoHS compliant, China RoHS, NIST cert available		

		Sanitary	
		2822 (Special Order)	**2823 (Special Order)**
Cell Constant		10.0	20.0
Operating Range		100 µS to 200,000 µS	200 µS to 400,000 µS
Compatible Sensor Electronics		2850	
Temperature Element		PT1000	
Operating Temperature/Pressure		5.2 bar (75 psig) max., 130 °C (266 °F) max.	
Wetted Materials	**Body**	316 SS or Titanium. Material and surface finish > RA 25 for all sensors	
	O-rings	EPR (EPDM)	
	Process Connection	1-1½ in. or 2 in. Sanitary Tri-Clamp	
Compatible Signet Instruments		8900 via 2850, 9900 direct using conductivity module or 2850, Profibus Concentrator, 9950 and D100 DeviceLink	
Applications Usage		High conductivity applications	
Standards and Approvals		RoHS compliant, China RoHS, NIST cert available	

Signet 2818-2823 Conductivity/Resistivity Electrodes

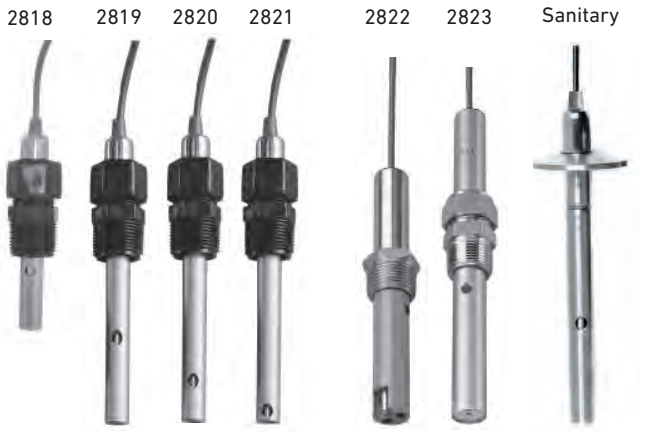

in-line only

Reversible threads for in-line or submersible installation.

Sanitary tri-clamp flange version.

Signet 2818-2823 Conductivity/Resistivity Electrodes are designed to provide versatile installation and accurate sensing across a very broad dynamic range. These electrodes are built with a controlled surface finish to ensure accuracy and repeatability.
The standard electrode is constructed 316 SS, but there are other materials available for maximum chemical compatibility.

Reversible threads or sanitary flanges allow for maximum installation versatility.

Sanitary flange versions are available in stainless steel and Titanium with surface quality finish of less than RA 25 and with an optional NIST Traceability Certificate to meet USP requirements.

Coupled with Signet patented measuring circuitry, a three decade measurement range is achieved without the need for troublesome electrode platinization. A platinum RTD (Pt1000) located within the electrode allows optimal temperature sensing.

Features

- **Standard process connections**
  - **¾ in. NPT Polypro**
  - **¾ in. NPT SS on 10 and 20 cell**
  - **Tri-clamp 1 -1½ in., 2 in.**
  - **Opt. ½ in. NPT 316 SS**
- **316 SS or Titanium (indicated tri-clamp only) standard electrode**
- **Alternative electrode materials available**
  - **Hastelloy-C**
  - **Monel**
  - **Titanium**
- **In-line or submersible mounting**
- **NIST traceable certified cells ±1% meet USP requirements**

Applications

- **Pure Water Treatment**
  - **Reverse Osmosis**
  - **Deionization**
  - **Distillation**
- **Boiler Condensate**
- **Semiconductor Water Production**
- **Rinse Water Monitoring and Control**
- **TDS (Total Dissolved Solids)**
- **Salinity**
- **USP Purified Water**
- **WFI Water Production**
- **Ultra Pure Water**

Specifications

Models 3-2818-1 (0.01 cm^{-1} Cell), 3-2819-1* (0.01 cm^{-1} Cell), 3-2820-1* (0.1 cm^{-1} Cell), Models 3-2821-1* (1.0 cm^{-1} Cell)

* Certified versions available (add "C" suffix to part no.)

General				
Operating Range	3-2818, 3-2819	0.055 to 100 µS	18.2 MΩ to 10 KΩ	0.02 to 50 ppm
	3-2820	1 to 1000 µS	1 MΩ to 1 KΩ	0.5 to 500 ppm
	3-2821	10 to 10,000 µS	5 to 5,000 ppm	
Cell Constant Accuracy		±2% of reading (certified cells ±1%)		
Temperature Compensation Device		Pt1000		
Cable Length (use for the 2818, 19, 20, 21, 22 and 23)	Standard	4.6 m (15 ft)		
	Maximum	30 m (100 ft) all sensors when used with 9900 or 9950 and Direct Conductivity/ Resistivity Module. 2818, 2819 maximum 4.6 m (15 ft) when used with 2850		
Wetted Materials				
O-rings		EPR (EPDM)		
Insulator Material		Carbon fiber reinforced PTFE		
Electrodes		316L stainless steel (1.4408, DIN 17440) or Titanium		
Max. Temperature/Pressure Rating				
Standard Polypro Fitting		6.9 bar @ 100 °C	100 psi @ 212 °F	
Optional 1/2: NPT 316 SS fitting (3-2820.392)		13.8 bar @ 120 °C	200 psi @ 248 °F	
Sanitary Connection		6.9 bar @ 120 °C	100 psi @ 248 °F	
Temperature Response, τ				
	0.01 cell	7 sec.		
	0.1 cell	53 sec.		
	1.0 cell	21 sec.		
Temperature Accuracy		0.3 °C		
Shipping Weight				
		0.4 kg	0.8 lb	
Standards and Approvals				
		RoHS compliant, China RoHS		

Model 3-2822-1 (10.0 cm^{-1} Cell)

General			
Operating Range		100 to 200,000 µS	50 to 100,000 ppm
Cell Constant Accuracy		±2% of reading (certified cells ±1%)	
Temperature Compensation Device		Pt1000	
Cable Length	Standard	4.6 m	15 ft
	Maximum	30 m	100 ft
Wetted Materials			
O-rings		EPR (EPDM)	
Body		CPVC	
Electrodes		316 stainless steel (1.4408, DIN 17440)	
Process Connection		Standard 316 SS fitting	¾ in. NPT threads
		Optional 316 SS submersion adapter fitting (3-2820.390)	¾ in. NPT threads
Max. Temperature/Pressure Rating			
		6.9 bar @ 95 °C	100 psi @ 203 °F
Temp. Response, τ		5 seconds	
Temp. Accuracy		0.3 °C	
Shipping Weight			
		0.4 kg	0.8 lb
Standards and Approvals			
		RoHS compliant, China RoHS	

Model 3-2823-1 (20.0 cm^{-1} Cell)

General		
Operating Range	200 to 400,000 µS	100 to 200,000 ppm
Cell Constant Accuracy	±2% of reading	
Temperature Compensation Device	Pt1000	
Cable Length	Standard	4.6 m (15 ft)
	Maximum	30 m (100 ft)
Wetted Materials		
O-rings	EPR (EPDM)	
Insulator Material	PEEK®	
Process Connection	Electrodes	316 stainless steel (1.4408, DIN 17440)
	Standard 316 SS fitting	¾ in. NPT thread
Max. Temperature/Pressure Rating		
	6.9 bar @ 150 °C	100 psi @ 302 °F
Temp. Response, τ	120 seconds	
Temp. Accuracy	±0.3 °C	
Shipping Weight		
	0.3 kg	0.6 lb
Standards and Approvals		
	RoHS compliant, China RoHS	

See Temperature and Pressure graphs for more information.

Dimensions

2818

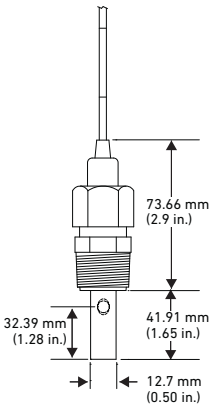

2819, 2820, 2821

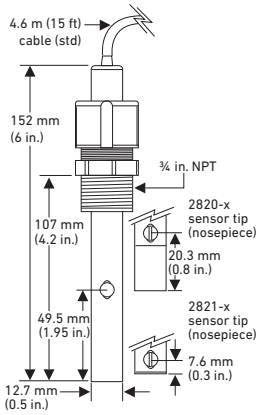

2822

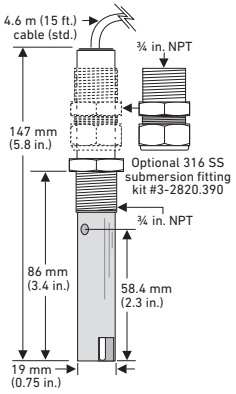

2823

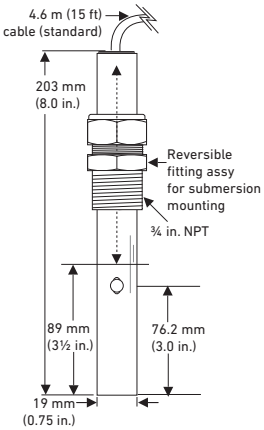

Sanitary

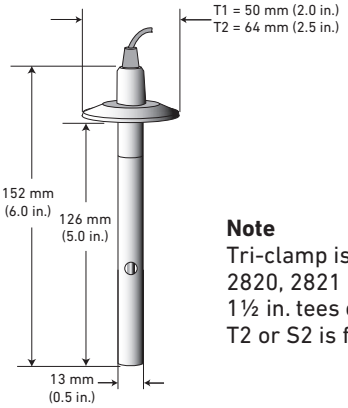

Note
Tri-clamp is available for 2819, 2820, 2821 only. T1 or S1 is for 1 to 1½ in. tees or flanges.
T2 or S2 is for 2 in. tees or flanges.

System Overview

Signet Model D100 DeviceLink

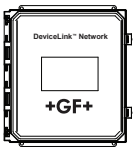

In-Line Installation

Panel Mount*	Pipe, Tank, Wall Mount	4 to 20 mA Output*	Automation System	Field (Integral) Mount*
Signet Instruments 8900 with 2850 Sensor Electronics 9900 with 3-9900.394 Direct Conductivity/Resistivity Module or 2850 Sensor Electronics 9950 with 9950.394 Direct Conductivity/Resistivity Module or with 3-9950.394-2 Dual Channel Conductivity Module or with 2850 Sensor Electronics	Signet Instruments 9900 with 3-9900.394 Direct Conductivity/Resistivity Module or 2850 Sensor Electronics with Rear Enclosure	Signet 2850 Sensor Electronics with a Customer Supplied Programmable Logic Controller or Programmable Automation Controller	Signet 2850 Sensor Electronics with 0486 Profibus Concentrator and Customer Supplied Programmable Logic Controller or Programmable Automation Controller	Signet Instrument 9900 with 3-9900.394 Direct Conductivity/Resistivity Module and Angle Adapter

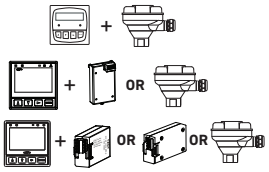

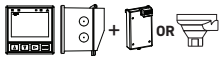

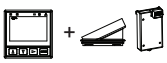

Signet 2818-2823
Conductivity Electrodes

Note: Conductivity electrodes need to go thru 2850 sensor (S³L or 4 to 20 mA) or go thru a 9900/9950 (4 to 20 mA) via direct conductivity module prior to signal going into D100

Signet 2819-2823 Conductivity Electrodes

Special order for 0.01, 0.1 and 1.0 cells**

Fittings - Customer Supplied

All sold separately

Submersible Installation

Panel Mount	Pipe, Tank, Wall Mount*	4 to 20 mA Output*	Automation System
Signet Instruments 8900 with 2850 Sensor Electronics 9900 with 3-9900.394 Direct Conductivity/Resistivity Module or with 2850 Sensor Electronics 9950 with 9950.394 Direct Conductivity/Resistivity Module or with 3-9950.394-2 Dual Channel Conductivity Module or with 2850 Sensor Electronics	Signet Instruments 9900 with 3-9900.394 Direct Conductivity/Resistivity Module or 2850 Sensor Electronics with Rear Enclosure and customer supplied pipe extension or conduit with 3/4 in. FNPT threads***	Signet 2850 Sensor Electronics with a Customer Supplied Programmable Logic Controller or Programmable Automation Controller	Signet 2850 Sensor Electronics with 0486 Profibus Concentrator and Customer Supplied Programmable Logic Controller or Programmable Automation Controller

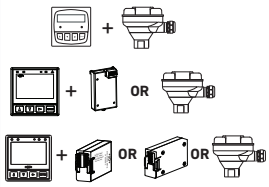

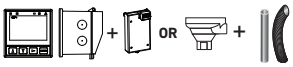

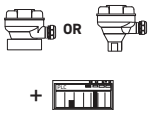

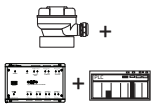

Signet 2818-2823
Conductivity Electrodes

Special order for 0.01, 0.1 and 1.0 cells**

All sold separately

*If required distance is greater that 100 ft, use 3-2850-52 (S³L) or 3-2850-52 4 to 20 mA sensor electronics.
** Special Order for 0.01, 0.1 and 1.0 cells. Submersible installation not applicable for Sanitary Conductivity Electrode.

Temperature/Pressure Graphs

Note:
The pressure/temperature graphs are specifically for the Signet sensor. During system design the specifications of all components must be considered. In the case of a metal piping system, a plastic sensor will reduce the system specification.

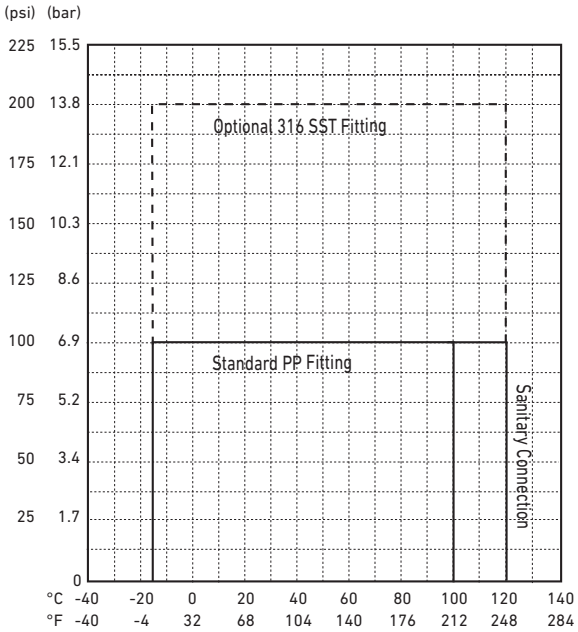

Operating Range Chart

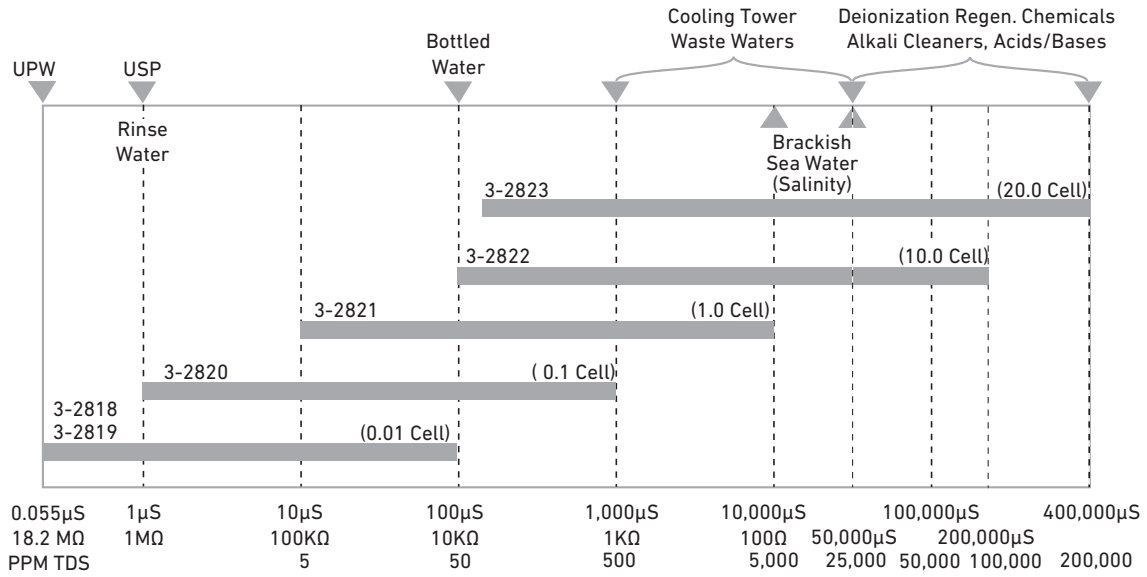

Application Tips

- GF Signet advises all conductivity sensors be installed in a piping system as shown in Fig 1.
- Liquid levels must be high enough to cover vent hole on sensor body.
- Threads on models 2823 can be reversed in the field.
- Use 2819 series electrodes with the 3-2850-63 electronics and 8900 for applications requiring multiple measuring points.
- Install sensors in an area that will remain free of air bubbles and sediment build-up.
- Conductivity measurements are affected if electrodes are coated by process substances.

Ordering Notes

1) Alternate wetted materials and sensor lengths are available through special order.
2) The 2818 and 2819 maximum cable length is 7.6 m (25 ft) unless used with the 9900 or 9950 with Direct Conductivity/Resistivity Module.
3) All other sensors - cable lengths of up to 30 m (100 ft) are available - consult factory.
4) Use PN 3-2820.390 or 3-2820.391 for a submersible threaded connection.

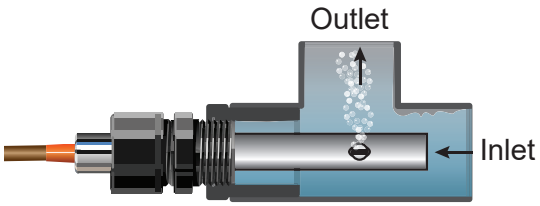

Fig. 1

150 300 300
Universal Sensor Adapter
(See page 232)

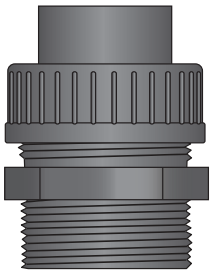

Example information on NIST Traceability Certificate

CERTIFICATE

Date: November 10, 2017

Sensor Part Number:	3-2819-T1C
Sensor Serial Number:	980159-04
Sensor Cell Constant:	0.0102
Temp. Element Offset:	0.1 °C
Measured at:	24.8 °C

NIST Certified

Please refer to Wiring, Installation, and Accessories sections for more information.

Ordering Information

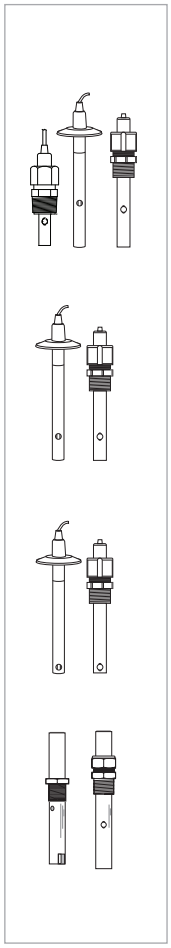

Mfr. Part No.	Code	Cell Constant	Sensor Material and Mounting	Insertion into Tee Size
3-2818-1**	**159 001 718**	0.01 cm-1	316 SS electrode, ¾ in. threads	in-line only
3-2819-1	**198 844 010**	0.01 cm-1	316 SS electrode, ¾ in. threads	in-line only
3-2819-1C	**159 000 651**	0.01 cm-1	316 SS electrode, ¾ in. threads (certified)	in-line only
3-2819-S1	**159 000 085**	0.01 cm-1	316 SS electrode, Sanitary Tri-clamp flange	1 to 1½ in.
3-2819-S1C†*	**159 000 087**	0.01 cm-1	316 SS electrode, Sanitary Tri-clamp flange	1 to 1½ in.
3-2819-S2†	**159 000 086**	0.01 cm-1	316 SS electrode, Sanitary Tri-clamp flange	2 in.
3-2819-S2C†*	**159 000 088**	0.01 cm-1	316 SS electrode, Sanitary Tri-clamp flange	2 in.
3-2819-T1†	**159 000 081**	0.01 cm-1	Titanium electrode, Sanitary Tri-clamp flange	1 to 1½ in.
3-2819-T1C†*	**159 000 083**	0.01 cm-1	Titanium electrode, Sanitary Tri-clamp flange	1 to 1½ in.
3-2819-T2†	**159 000 082**	0.01 cm-1	Titanium electrode, Sanitary Tri-clamp flange	2 in.
3-2819-T2C†*	**159 000 084**	0.01 cm-1	Titanium electrode, Sanitary Tri-clamp flange	2 in.
3-2820-1	**198 844 000**	0.1 cm-1	316 SS electrode, ¾ in. threads	in-line only
3-2820-1C	**159 000 654**	0.1 cm-1	316 SS electrode, ¾ in. threads (certified)	in-line only
3-2820-S1	**159 000 089**	0.1 cm-1	316 SS electrode, Sanitary Tri-clamp flange	1 to 1½ in.
3-2820-S1C†*	**159 000 091**	0.1 cm-1	316 SS electrode, Sanitary Tri-clamp flange	1 to 1½ in.
3-2820-S2†	**159 000 090**	0.1 cm-1	316 SS electrode, Sanitary Tri-clamp flange	2 in.
3-2820-S2C†*	**159 000 092**	0.1 cm-1	316 SS electrode, Sanitary Tri-clamp flange	2 in.
3-2820-T1†	**159 000 624**	0.1 cm-1	Titanium electrode, Sanitary Tri-clamp flange	1 to 1½ in.
3-2820-T2†	**159 000 625**	0.1 cm-1	Titanium electrode, Sanitary Tri-clamp flange	2 in.
3-2821-1	**198 844 001**	1.0 cm-1	316 SS electrode, ¾ in. threads	in-line only
3-2821-1C	**159 000 650**	1.0 cm-1	316 SS electrode, ¾ in. threads (certified)	in-line only
3-2821-S1†	**159 000 093**	1.0 cm-1	316 SS electrode, Sanitary Tri-clamp flange	1 to 1½ in.
3-2821-S1C†*	**159 000 095**	1.0 cm-1	316 SS electrode, Sanitary Tri-clamp flange	1 to 1½ in.
3-2821-S2†	**159 000 094**	1.0 cm-1	316 SS electrode, Sanitary Tri-clamp flange	2 in.
3-2821-S2C†*	**159 000 096**	1.0 cm-1	316 SS electrode, Sanitary Tri-clamp flange	2 in.
3-2821-T1†	**159 000 626**	1.0 cm-1	Titanium electrode, Sanitary Tri-clamp flange	1 to 1½ in.
3-2821-T2†	**159 000 627**	1.0 cm-1	Titanium electrode, Sanitary Tri-clamp flange	2 in.
3-2822-1	**198 844 002**	10 cm-1	316 SS electrode with fixed ¾ in. threads	in-line or submersible mounting only
3-2823-1	**198 844 003**	20 cm-1	316 SS electrode, ¾ in. reversible threads	in-line or submersible mounting only

Special Order Options - Please consult the factory
High Temperature and Pressure options.
Wetted materials (Hastelloy-C, Monel and Titanium) and sensor lengths.
Wet-Tap, ball valve retractable sensor for long insertion length available as a special order.

Accessories and Replacement Parts

Mfr. Part No.	Code	Description
3-2850.101-1	**159 001 392**	Plug-in NIST traceable recertification tool, 1.0 µS simulated, for use with 8900, 9900, 9950, 2850 and the 2850 4-20 mA output
3-2850.101-2	**159 001 393**	Plug-in NIST traceable recertification tool, 2.5 µS simulated, for use with 8900, 9900, 9950, 2850 and the 2850 4-20 mA output
3-2850.101-3	**159 001 394**	Plug-in NIST traceable recertification tool, 10.0 µS simulated, for use with 8900, 9900, 9950, 2850 and the 2850 4-20 mA output
3-2850.101-4	**159 001 395**	Plug-in NIST traceable recertification tool, 18.2 MΩ simulated, for use with 8900, 9900, 9950, 2850 and the 2850 4-20 mA output
3-2850.101-5	**159 001 396**	Plug-in NIST traceable recertification tool, 10.0 MΩ simulated, for use with 8900, 9900, 9950, 2850 and the 2850 4-20 mA output
3-2820.390	**198 840 223**	¾ in. NPT fitting, 316 SS for use with 2822-1 and 2823-1 for submersible mounting
3-2820.391	**198 840 221**	¾ in. NPT fitting, Polypro replacement for 2819-1, 2820-1 or 2821-1
3-2820.392	**198 840 222**	½ in. NPT fitting, 316 SS for use with 2819-1, 2820-1 or 2821
3-2850-61	**159 001 400**	Universal junction box, conductivity electronics, digital (S^3L) output
3-2850-62	**159 001 401**	Universal junction box, conductivity electronics, 4 to 20 output
5523-0322	**159 000 761**	Sensor cable (per ft), 3 cond. plus shield, 22 AWG (for cable extension through a junction box for the following sensors: 3-2820, 3-2821, 3-2822, 3-2823
3-8050-1	**159 000 753**	Universal mount junction box

Note: GF Signet recommended sensors that require extended cable lengths be ordered from the factory.

3-28XX-WTA Conductivity/Resistivity Wet-Tap Assemblies

Conductivity >>

SAP Material Number 150 301 003

3-28XX-WTA

Cell Constant	
19	K = 0.01
20	K = 0.1
21	K = 1.0
22	K = 10.0
23	K = 20.0

Sensor	
A	½ in. dia. sensor
B	¾ in. dia. sensor

Example Part Number

3-2820-WTA-B

Conductivity sensor, K = 0.1, Wet-Tap electrode assembly with ¾ inch length sensor.

Valve-Insertion Sensor assembly. These insertion sensors are best suited for difficult applications in which the process line can not be interrupted, depressurized or is difficult to reach. These insertion sensors are also excellent for condensate return monitoring and not for boiler blowdown. The O-rings are chosen for best general chemical resistance, not for steam service*.

Wetted materials are 316L stainless steel and PTFE or PEEK, with double O-ring seals of EPR (EPDM). Junction box is aluminium.

Sensor can be used with the 2850 electronics or the Conductivity Module and 9900 Transmitter.

Version "A" ½ inch diameter sensor

Cell constants 0.01, 0.1, 1.0 and 10.0 configuration

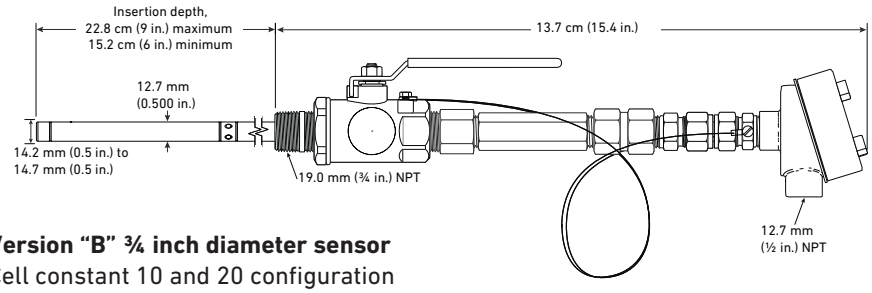

Version "B" ¾ inch diameter sensor

Cell constant 10 and 20 configuration

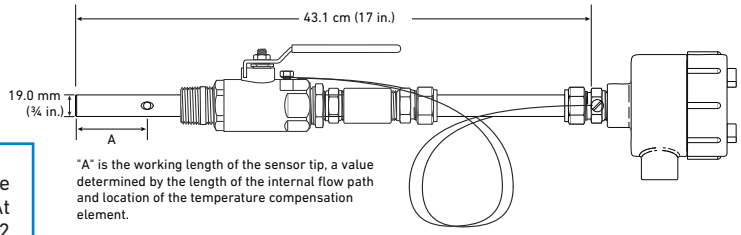

***NOTE:**
The Version "B" ¾" diameter sensor transmits 44% of the line pressure as force trying to push the sensor out of the line. At 50 psi, the operator will have to hold back the equivalent of a 22 pound weight with one arm when retracting the sensor (difficult for the average person). At 100 psi, the force to handle with one arm is 44 pounds (difficult to the point of dangerous, if there is hot fluid in the line). The Version "A" ½" diameter sensor transmits only 19.6% of the line pressure outward, less than half the force from the ½" diameter sensor. It can therefore be safely operated at pressures up to 100 psi.

General	
Cell Constant	
	0.01
	0.1
	1
	10
	20
Wetted Materials	
	316 Stainless Steel
	PVDF
	EPR (EPDM) O-rings
Temperature Element	
	PT1000

Temperature and Pressure Rating		
Stand Alone Sensor	6.8 bar / 100 psi at 120 °C (no ball valve)	
With Ball Valve	3.5 bar / 50 psi at all temperatures (no exceptions)	
½ inch sensor	6.8 bar/100 psi	
¾ inch sensor	3.5 bar/50 psi at all temperatures	
Connections		
	Sensor assembly ¾ in. NPT	
	Ball valve 1 in. NPT	
Shipping Weight		
2819, 2820, 2821	1.60 kg	3.5 lb
2822, 2823	2.50 kg	5.5 lb

Special order products may not meet all of the specifications of the standard sensor assemblies.

3-28XX-HTHP Conductivity/Resistivity High Pressure/ High Temp Sensor Assemblies

Conductivity >>

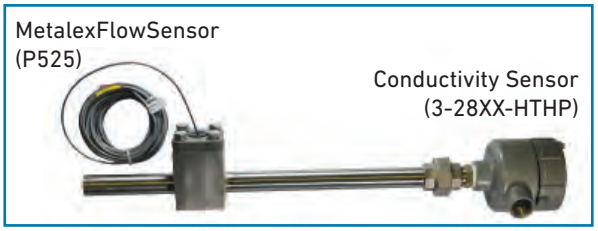

Custom stainless steel manifold available in ¾ inch to 12 inch.

The 28XX-HTHP Conductivity Sensor is designed for the high temperature and pressures normally found in boiler applications.

Ideal applications include blow-down control, condensate return monitoring, leak detection on heat exchanges and steam purity measurement.

Wetted materials include, 316L Stainless steel, PEEK, EPR (EPDM) O-rings. Available in three cell constants.

SAP Material Number 150 301 003

3-28XX-HTHP

Cell Constant	
19	K = 0.01
20	K = 0.1
21	K = 1.0

Example Part Number

3-2820-HTHP

Conductivity sensor, K = 0.1, High Temperature, High Pressure.

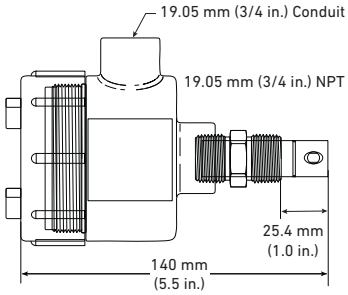

Note:
Use the P525 Metalex Sensor to monitor boiler feed water and condensate return.

Contact GF Signet

Special products for prices on a boiler control package, Conductivity Senors, Metalex Flow Sensor and/ or 9900 Transmitters.

Max Pressure/Temperature ratings		
	High Temperature Sensor	250 psig at 205 °C
		500 psig at 100 °C
Wetted Materials		
	Electrodes	316L Stainless Steel
	O-rings	PEEK, EPR (EPDM)
Shipping Weight		
	1.02 kg	2.25 lb

The 28XX-HP Conductivity Sensor is designed for high pressure applications.

Wetted materials include 316L stainless steel, PEEK, EPR (EPDM) O-rings. Available in two cell constants.

3-28XX-HP

Cell Constant	
22	K = 10.0
23	K = 20.0

Example Part Number

3-2822-HP

Conductivity sensor, K = 10.0, High Pressure.

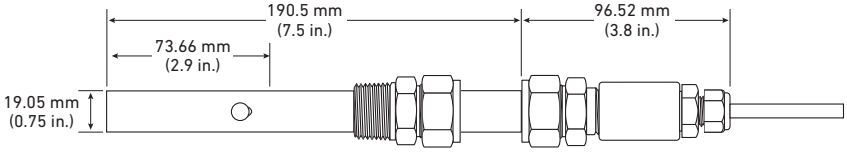

Max Pressure/Temperature ratings		
	High Pressure Sensor	500 psig at 25 °C
Wetted Materials		
	Electrodes	316L Stainless Steel
Shipping Weight		
	1.02 kg	2.25 lb

Special order products may not meet all of the specifications of the standard sensor assemblies.

3-2850-XX-XX-X Conductivity/Resistivity Custom Transmitter Assemblies

Conductivity >>

3-2850 electronics can be ordered using the 2819, 2820 and 2821 series conductivity sensors for applications where a longer sensor length is needed.

Wetted Material:
Choose Titanium process connector and sensor body or 316L Stainless Steel.

See Signet Measurement and Control Product Catalog for additional specifications for:

3-2819	3-2850-51
3-2820	3-2850-52
3-2821	

SAP Material Number 150 301 003

3-2850-XX-XX-X

-	**Output**	
	51	Digital (S^3L)
	52	4 to 20 mA
-	**Cell Constant**	
	19	K= 0.01
	20	K= 0.1
	21	K= 1.0
-	**Sensor Body and Process Connection Material**	
	S	316 L Stainless Steel
	T	Titanium

Example Part Number

3-2850-51-21-T

Conductivity sensor, digital (S^3L) output, K = 1.0 cell constant, Titanium body and process connection.

Wetted Materials		
O-rings	EPR (EPDM)	
Insulator Material	Carbon fiber reinforced PTFE	
Electrodes	316L stainless steel (1.4408, DIN 17440) or Titanium	
Shipping Weight		
	0.79 kg	1.75 lb
Standards and Approvals		
	CE, FCC	
	RoHS compliant, China RoHS	

The 3-2819.606-X dual NPT adapter can be used to adapt the 3-2819-1, 3-2820-1 or the 3-2821-1 Conductivity sensor to the 3-2850-5X electronics.

3-2819.606-X

-	**Process Connection Material**	
	S	316L Stainless Steel
	T	Titanium

Example Part Number

3-2819.606-S

3/4 inch dual NPT Adapter, Stainless Steel connection

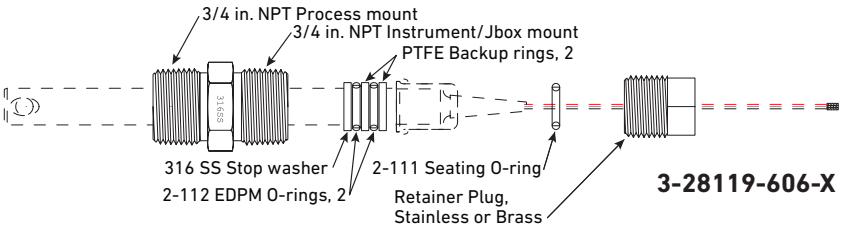

3-28119-606-X

Seat snugly with one wrench, while hand holding the fitting.
Do not over tighten by using two wrenches!

Shipping Weight		
	0.20 kg	0.44 lb
Standards and Approvals		
	CE	

Special order products may not meet all of the specifications of the standard sensor assemblies.

In-Line Installation for 3-2820.391 and 3-2820.392

Installation Tip:
Mark the sensor body to indicate the position of the vent hole. During installation, align the vent hole mark so it faces upward or against the process flow to prevent air bubble entrapment.

2818/2819/2820/2821

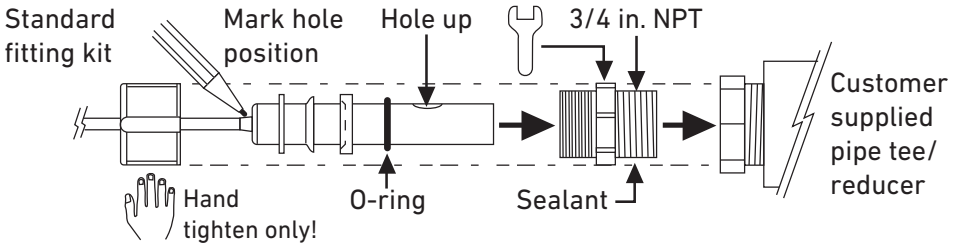

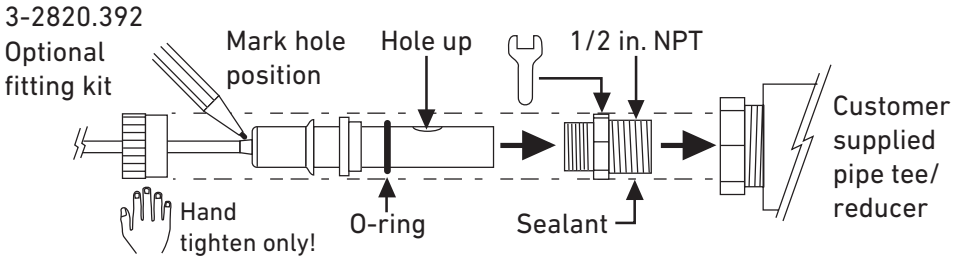

Signet 2839-1V(D) to 2842-1V(D) PVDF Conductivity Electrodes

2839-1V 2840-1V 2841-1V 2842-1V

The Signet 2839-1V(D) to 2842-1V(D) Conductivity/ Resistivity Electrodes are available in four cell constants from 0.01 to 10.0 cm^{-1}, and are suitable for a wide variety of applications from high purity water quality monitoring to weak acids and bases. 316 SS electrode surface finishes are controlled in a precision bead blasting operation to ensure measurement accuracy and repeatability.

The PVDF insulator and process connections are injection over-molded to minimize variance between electrodes. Double threaded connections in either ¾ in. NPT or ISO 7/1-R 3/4 enable quick and easy installation in submersible or in-line configurations. Transmitter integral mounting kit and junction boxes are available as accessories.

A Certificate of Calibration is included with all 2839-1V(D) to 2842-1V(D) Conductivity/Resistivity Electrodes. The electrodes are calibrated to meet ± 2% accuracy. Electrodes can be shipped back to the GF Signet factory for recertification.

The certificate includes calculated cell constant and temperature offset which when entered into the "custom cell" menu of any Signet meter would provide a 2% accuracy of the sensors reading.

Features

- **± 2% accuracy - Custom calibration certificate provided**
- **Dual-threaded**
- **Compact electrode length for easy in-line installation in small pipe sizes**
- **Triple orifice flow-through design reduces clogging and bubble entrapment**
- **316 SS electrodes with injection molded PVDF process connections and insulators**
- **Meets USP requirements**

Applications

- **Water Treatment & Water Quality Monitoring**
- **Reverse Osmosis**
- **Deionization**
- **Cooling Tower and Boiler Protection**
- **Distillation**
- **Desalination**
- **Demineralizer**
- **Semiconductor**
- **Aquatic Animal Life Support Systems**

Specifications

General				
Operating Range				
	2839	0.055 to 100 µS	0.02 to 50 ppm	18.2 MΩ to 10 KΩ
	2840	1 to 1,000 µS	0.5 to 500 ppm	1 MΩ to 1 KΩ
	2841	10 to 10,000 µS	5 to 5,000 ppm	
	2842	100 to 200,000 µS	50 to 100,000 ppm	
Cell Constant Accuracy		±2% when the information provided on the certificate of calibration is entered into the transmitter/meter or when wet calibrated with a traceable standard.		
Dual-Threaded Process Connection		-1V versions: ¾ in. NPT		
		-1VD versions: ISO 7/1-R 3/4		
Cable Length (use for the 2839, 40 ,41 and 42)	standard	4.6 m (15 ft)		
	maximum	30 m (100 ft) all sensors when used with the 9900, 9950 and direct conductivity/resistivity modules		
	0.01 cells	4.6 m (15 ft) when used with 2850*		
Temperature Element		Pt1000		
Temp. Response, t				
	0.01 cell	5 sec.		
	0.10 cell	10 sec.		
	1.0 cell	20 sec.		
	10.0 cell	30 sec.		
Temperature Accuracy		±0.5 °C	±0.9 °F	
Wetted Materials				
Internal O-ring (2841 and 2842)		FKM		
Insulator Material		PVDF		
Electrode Material		316 SS		
Threaded Process Connection		PVDF		
Max. Temperature/Pressure Rating				
		131 °C @ 2.76 bar	268 °F @ 40 psi	
Storage Temperature		-20 °C to 131 °C	-4 °F to 268 °F	
Shipping Weight				
2839		0.34 kg	0.74 lb	
2840, 2841, 2842		0.30 kg	0.66 lb	
Standards and Approvals				
		RoHS compliant, China RoHS		
		Manufactured under ISO 9001 for Quality and ISO 14001 for Environmental Management and OHSAS 18001 for Occupational Health and Safety		

*2850 cable length 4.6 m (15 ft) maximum for all cells.
See Temperature and Pressure graphs for more information.

Dimensions

Dual-Threaded Electrodes

3-2839-1V(D) (0.01 cell)

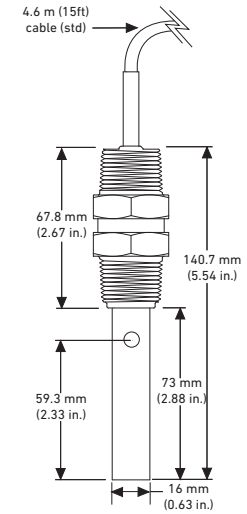

Dual threads 3/4 NPT or ISO 7/1-R 3/4 front and back

3-2840-1V(D) (0.1 cell)

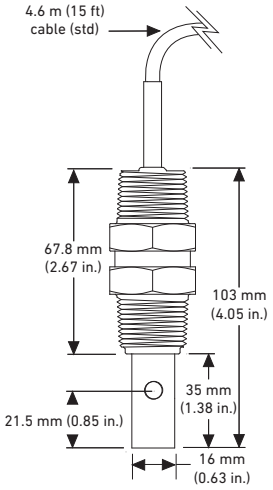

3-2841-1V(D) (1.0 cell)*

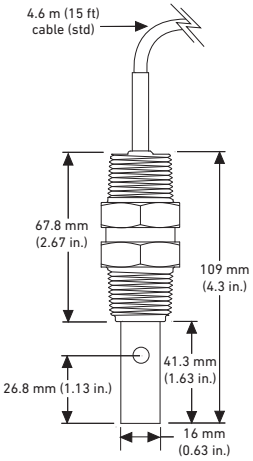

Dual threads 3/4 NPT or ISO 7/1-R 3/4 front and back

3-2842-1V(D) (10.0 cell)*

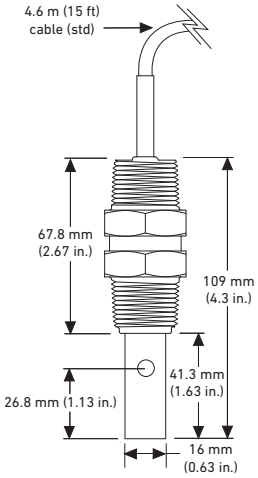

* Although these electrodes look similar in design, there is an inherent difference. From the bottom view, the 2841 electrode features a simple plastic insert. However, the 2842 electrode features a complex plastic insert with four holes through which liquid flows.

Integral Mount Sensor

The 2839-2842 Dual Threaded Conductivity Electrodes can be directly mounted to a 3-9900-1 transmitter, 3-9900.396 direct conductivity module, 3-9900.396 angle adjust adapter and the 8052 Integral Mount Kit. Customer to modify the cable length of the standard cable assembly. See sensor manual for details.

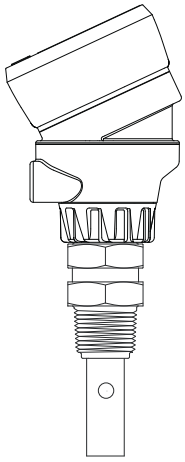

Signet Model D100 DeviceLink

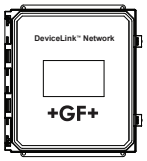

System Overview

In-Line Installation

Panel Mount	Pipe, Tank, Wall Mount	4 to 20 mA Output	Automation System	Field (Integral) Mount
Signet Instruments 8900 with 2850 Sensor Electronics 9900 with 3-9900.394 Direct Conductivity/Resistivity Module or 2850 Sensor Electronics 9950 with 9950.394 Direct Conductivity/Resistivity Module or with 3-9950.394-2 Dual Channel Conductivity Module or with 2850 Sensor Electronics	Signet Instruments 9900 with 3-9900.394 Direct Conductivity/Resistivity Module or 2850 Sensor Electronics with Rear Enclosure	Signet 2850 Sensor Electronics with a Customer Supplied Programmable Logic Controller or Programmable Automation Controller	Signet 2850 Sensor Electronics with 0486 Profibus Concentrator and Customer Supplied Programmable Logic Controller or Programmable Automation Controller	Signet Instrument 9900 with 3-9900.394 Direct Conductivity/Resistivity Module and Angle Adapter

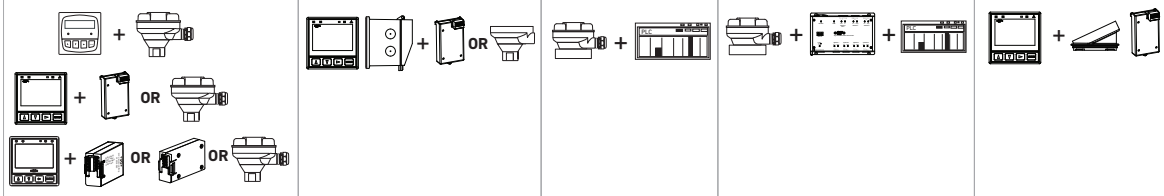

Signet 2839-2842 Conductivity Electrodes

Customer Supplied Fittings, 3/4 in. NPT or ISO threaded

All sold separately

Submersible Installation

Panel Mount	Pipe, Tank, Wall Mount*	Field (Integral) Mount	4 to 20 mA Output	Automation System
Signet Instruments 8900 with 2850 Sensor Electronics 9900 with 3-9900.394 Direct Conductivity/Resistivity Module or with 2850 Sensor Electronics 9950 with 9950.394 Direct Conductivity/Resistivity Module or with 3-9950.394-2 Dual Channel Conductivity Module or with 2850 Sensor Electronics	Signet Instruments 9900 with 3-9900.394 Direct Conductivity/Resistivity Module or 2850 Sensor Electronics with Rear Enclosure and customer supplied pipe extension or conduit with 3/4 in. FNPT threads	Signet Instrument 9900 with 3-9950.394 Direct Conductivity/Resistivity Module and Angle Adapter	Signet 2850 Sensor Electronics with a Customer Supplied Programmable Logic Controller or Programmable Automation Controller	Signet 2850 Sensor Electronics with 0486 Profibus Concentrator and Customer Supplied Programmable Logic Controller or Programmable Automation Controller

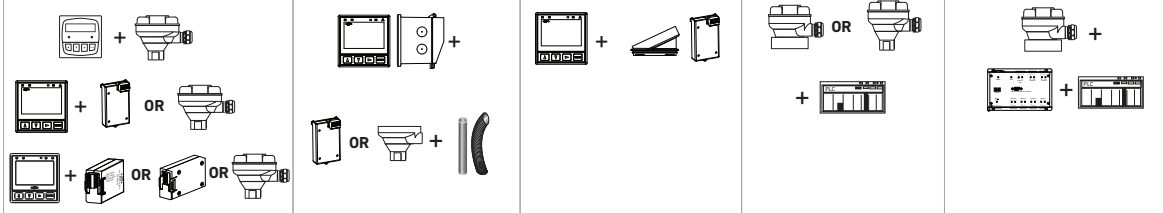

Signet 2839-2842 Conductivity Electrodes

Note: Conductivity electrodes need to go thru 2850 sensor (S^3L or 4 to 20 mA) or go thru a 9900/9950 (4 to 20 mA) via direct conductivity module prior to signal going into D100

All sold separately

Operating Range Chart

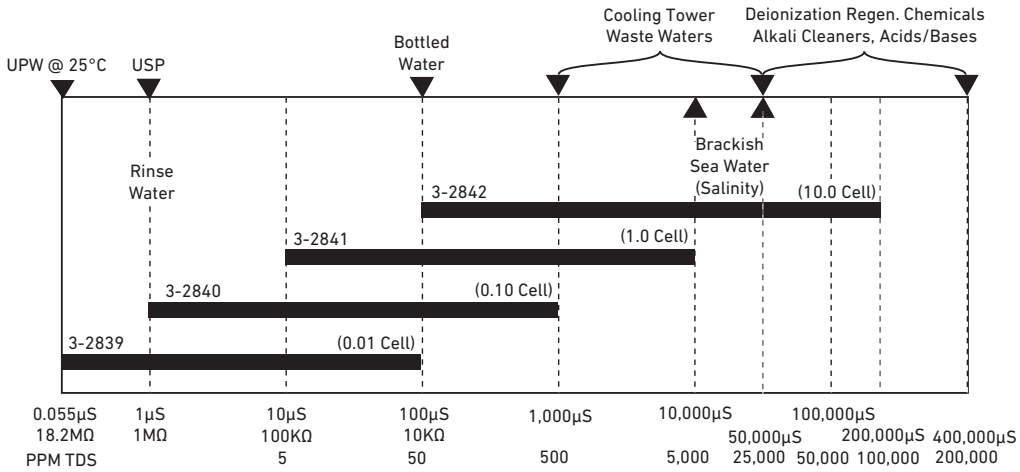

Temperature/Pressure Graphs

Note:
The pressure/temperature graphs are specifically for the Signet sensor. During system design the specifications of all components must be considered. In the case of a metal piping system, the PVDF process connector provided with the sensor may reduce the overall system working pressure.

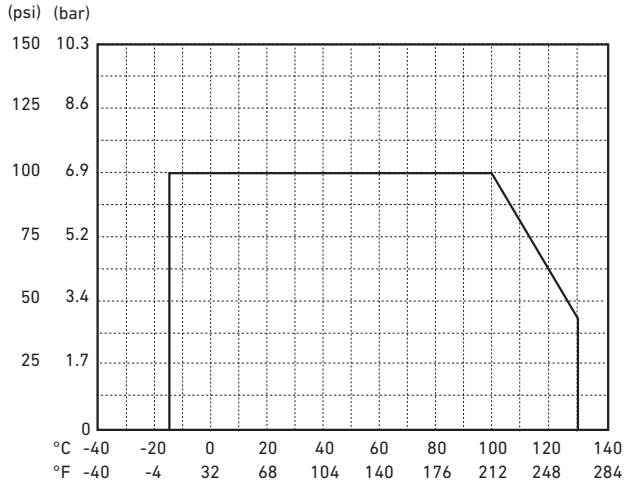

Application Tips

- Use 2839 series electrodes with the 3-2850-63 electronics and 9950 or 8900 for applications requiring multiple measuring points.
- Liquid levels must be high enough to cover vent hole on sensor body.
- Install sensors in an area that will remain free of air bubbles and sediment build-up.
- Conductivity measurements are affected if electrodes are coated by process substances.
- Use Model 2839 with the 2850/9900, 9950 or the 8900 for low conductivity applications requiring multiple measuring points.

Ordering Notes

1) The Conductivity Certification tools are compatible with the following Signet Instruments: 8900, 9900, and 9950.
2) The sensor cable can be extended up to 30 m (100 ft). See restrictions under general specifications.

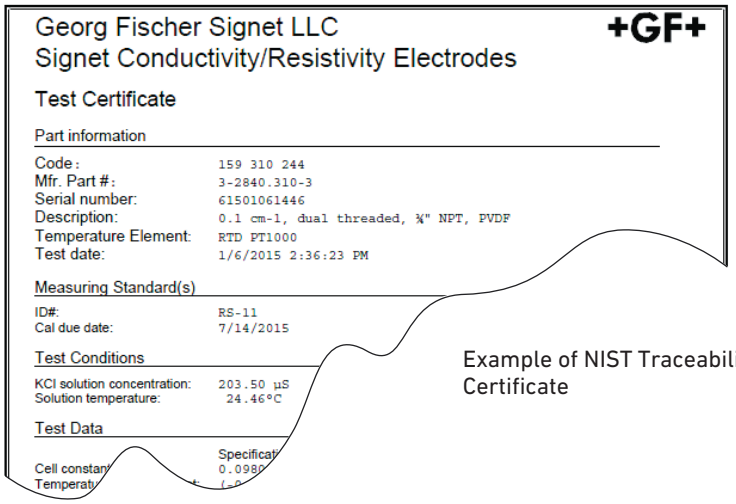
Georg Fischer Signet LLC
Signet Conductivity/Resistivity Electrodes
+GF+

Test Certificate

Part information

Code:	159 310 244
Mfr. Part #:	3-2840.310-3
Serial number:	61501061446
Description:	0.1 cm-1, dual threaded, ¾" NPT, PVDF
Temperature Element:	RTD PT1000
Test date:	1/6/2015 2:36:23 PM

Measuring Standard(s)

ID#:	RS-11
Cal due date:	7/14/2015

Test Conditions

KCl solution concentration:	203.50 µS
Solution temperature:	24.46°C

Test Data

Example of NIST Traceability Certificate

Please refer to Wiring, Installation, and Accessories sections for more information.

Ordering Information

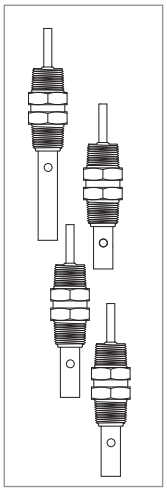

Sensors for use with 9900, and 2850 instruments

Mfr. Part No.	Code	Cell Constant	Connection	Thread Size(s)	Cable Length
3-2839-1V	**159 001 810**	0.01 cm-1	Dual threaded	¾ inch NPT	4.6 m (15 ft)
3-2839-1VD	**159 001 811**	0.01 cm-1	Dual threaded	ISO 7/1-R 3/4	4.6 m (15 ft)
3-2840-1V	**159 001 812**	0.1 cm-1	Dual threaded	¾ inch NPT	4.6 m (15 ft)
3-2840-1VD	**159 001 813**	0.1 cm-1	Dual threaded	ISO 7/1-R 3/4	4.6 m (15 ft)
3-2841-1V	**159 001 814**	1.0 cm-1	Dual threaded	¾ inch NPT	4.6 m (15 ft)
3-2841-1VD	**159 001 815**	1.0 cm-1	Dual threaded	ISO 7/1-R 3/4	4.6 m (15 ft)
3-2842-1V	**159 001 816**	10 cm-1	Dual threaded	¾ inch NPT	4.6 m (15 ft)
3-2842-1VD	**159 001 817**	10 cm-1	Dual threaded	ISO 7/1-R 3/4	4.6 m (15 ft)

Special Order Options - Please consult the factory
Cable length extensions of up to 30 m (100 ft) are available.
For any sensor being used with the 2850-6X, cable length should not exceed 4.6 m (15 ft).

Accessories and Replacement Parts

Mfr. Part No.	Code	Description
3-2850.101-1	**159 001 392**	Plug-in NIST traceable recertification tool, 1.0 µS simulated, for use with 8900, 9900, 9950, 2850 and the 2850 4-20 mA output
3-2850.101-2	**159 001 393**	Plug-in NIST traceable recertification tool, 2.5 µS simulated, for use with 8900, 9900, 9950, 2850 and the 2850 4-20 mA output
3-2850.101-3	**159 001 394**	Plug-in NIST traceable recertification tool, 10.0 µS simulated, for use with 8900, 9900, 9950, 2850 and the 2850 4-20 mA output
3-2850.101-4	**159 001 395**	Plug-in NIST traceable recertification tool, 18.2 MΩ simulated, for use with 8900, 9900, 9950, 2850 and the 2850 4-20 mA output
3-2850.101-5	**159 001 396**	Plug-in NIST traceable recertification tool, 10.0 MΩ simulated, for use with 8900, 9900, 9950, 2850 and the 2850 4-20 mA output
3-2850-61	**159 001 400**	Universal junction box, conductivity electronics, digital (S^3L) output
3-2850-62	**159 001 401**	Universal junction box, conductivity electronics, 4 to 20 output
3-8052	**159 000 188**	¾ in. integral mounting kit
5523-0322	**159 000 761**	Sensor cable (per ft), 3 cond. plus shield, 22 AWG, for cable extension through a junction box for the following sensors: 3-2840, 3-2841, 3-2842
3-8050-1	**159 000 753**	Universal mount junction box

Universal In-line Sensor Adapter

For in-line applications requiring extra insertion depth for conductivity, temperature, and pressure process measurements.

The 2 in. x ¾ in. Universal Sensor adapter with union style connection allows the user more flexibility when installing the Signet sensor in larger size lines. By utilizing the ¾ back end connection, the sensor can be extended further into the process stream, proving adequate exposure to the fluid, thus ensuring proper measurement.

Wetted materials are CPVC/FKM, with a pressure rating of up to 150 psi, for better performance in a wide variety of applications.

Features

- **Size 2 in. x ¾ in.**
- **Material CPVC/FKM**
- **Extended sensor insertion, use with:**
  - **Conductivity**
  - **Temperature**
  - **Pressure**

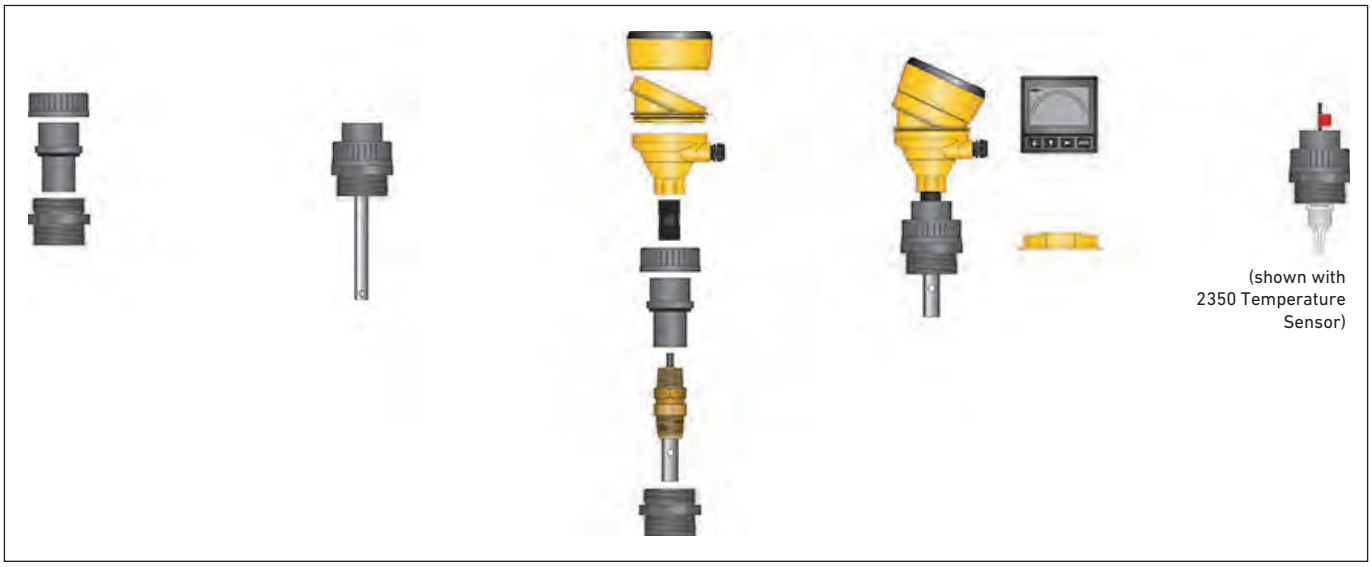

Dimensions

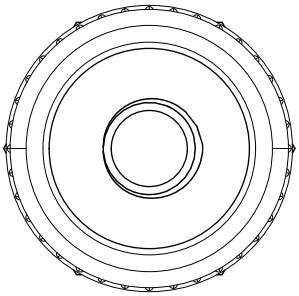

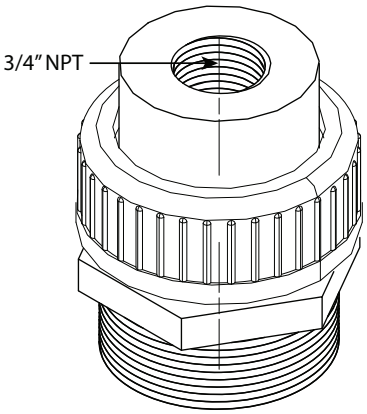

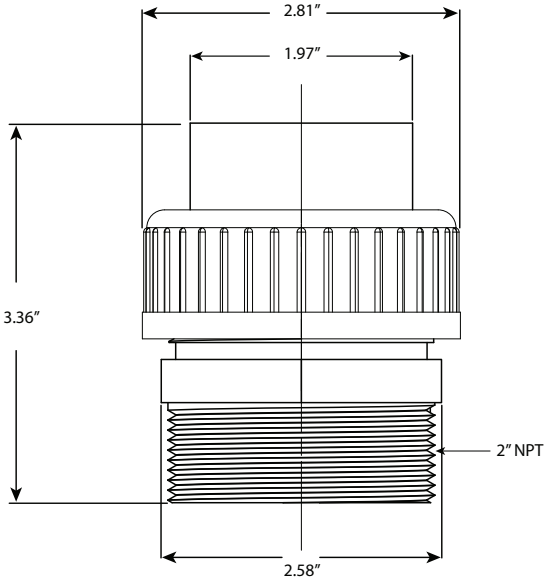

Ordering Information

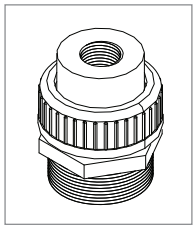

Code	Description
150 300 300	Universal Adapter

Signet 2850 Conductivity/Resistivity Sensor Electronics and Integral Systems with PVDF Sensor

Universal Mount Junction Box

NPT Mount Junction Box

2850 Integral Conductivity System for in-line installations, PVDF

The Signet 2850 Conductivity/Resistivity Sensor Electronics are available in various configurations for maximum installation flexibility. The universal mount version is for pipe, wall, or tank mounting and enables single or dual (digital versions only) inputs using any standard Signet conductivity/resistivity sensor. The threaded j-box version can be used with these same Signet sensors for submersible sensor mounting. It is also available as a combined integral system configuration for in-line mounting and includes a conductivity electrode in a choice of 0.01, 0.1, 1.0, 10.0 or 20.0 cm^{-1} cell constants. The 2850 is ideal for applications with a conductivity range of 0.055 to 400,000 µS or a resistivity range of 18.2 MΩ to 10 kΩ.

All 2850 units are available with a choice of a single or dual digital (S^3L) outputs, or a single 4 to 20 mA. The single digital (S^3L) output version can be paired with the 9900 or 9950 Transmitter to extend the distance between the measuring points to 120 m (400 ft).

The 8900 Multi-Parameter Controller allows for up to six 2850 (S^3L) output conductivity sensors to be used with the Signet 8900 Multi-Parameter Controller. The 9950 Multi-Parameter Transmitter allows for up to two 2850 (S^3L) output conductivity sensors to be used. All 2850 units are built with NEMA 4X/IP65 enclosures which allow output wiring connections with long cable runs of up to 305 m (1,000 ft).

The two-wire 4 to 20 mA output version is available with eight 4 to 20 mA output ranges for each electrode cell constant. Each range can be inverted and is field selectable.

EasyCal is a standard feature that automatically recognizes conductivity test solution values for simple field calibration. A certification tool is available for validation of the sensor electronics according to USP requirements.

Features

- **Test certificate supplied with all sensors**
- **Custom cell constant programmed into the electronics**
- **Integral mount systems for quick and easy installation**
- **Compact design for maximum installation flexibility**
- **Extends the distance between the measuring point and the 9900 Transmitter to 120 m (400 ft)**
- **Digital (S^3L) interface or two-wire 4 to 20 mA output**
- **EasyCal with automatic test solution recognition**
- **Dual channel unit available for low cost installation with Signet 8900 Multi-Parameter Controller**
- **For use with ALL Signet conductivity electrodes**

Applications

- **Water Treatment & Water Quality Monitoring**
- **Reverse Osmosis**
- **Deionization**
- **Demineralizer, Regeneration & Rinse**
- **Scrubber, Cooling Tower and Boiler Protection**

U.S. Patent No.: 7,550,979 B2

Specifications

General			
Compatible Electrodes		All Signet Sensors	
Materials			
NPT Mount Junction Box for Integral Mount		PBT	
Universal/Remote Mount		PBT, CPVC	
EasyCal - Automatic Recognition of the Following Conductivity Values			
	146.93 µS, 1408.8 µS, 12856 µS (@25 °C) (Test solutions Per ASTM D1125-95)		
	10 µS, 100 µS, 200 µS, 500 µS, 1000 µS, 5000 µS, 10,000 µS, 50,000 µS, 100,000 µS (@ 25 °C) (Standard test solutions)		
Electrical			
Power	12 to 24 VDC ±10%, regulated for 4 to 20 mA output (typically called "Loop Powered")		
	5 to 6.5 VDC ±5% regulated recommended (provided by the Signet 8900, 9900, 9950, 0486), 3.0 mA max for Digital (S^3L) output (Reverse polarity and short circuit protected)		
Digital (S^3L) Output: Serial ASCII, TTL level 9600 bps			
Accuracy	Conductivity	± 2% of reading	
	Temperature	< 0.2 °C	
Resolution	Conductivity	0.1% of reading	
	Temperature	< 0.2 °C	
Update Rate	Single channel models	< 600 ms	
	Dual channel models	< 1200 ms	
Available Data via Digital (S^3L) Output			
	Raw conductivity		
	Calibrated conductivity		
	Calibrated temperature-compensated conductivity		
	Temperature		
Max. Temperature/Pressure Rating			
Operating Temperature	-10 °C to 85 ° C		14 °F to 185 °F
Storage Temperature	-20 °C to 85 ° C		-4 °F to 185 °F
Relative Humidity	0 to 95%, non-condensing		
Enclosure	NEMA 4X/IP65		
Current Output			
Field-selectable Ranges			
Factory Set Span (Integral mount only)	0.01 cell (2839**)	4 to 20 mA = 0 to 100 µS	
	0.10 cell (2840**)	4 to 20 mA = 0 to 1000 µS	
	1.0 cell (2841**)	4 to 20 mA = 0 to 10,000 µS	
	10.0 cell (2842**)	4 to 20 mA = 0 to 200,000 µS	
	20.0 cell (2823)*	4 to 20 mA = 0 to 400,000 µS	
*Special Order			
**Test certificate supplied with all sensors. Custom cell constant programmed into the electronics.			
Max. Loop Resistance	50 Ω @ 12 VDC		
	325 Ω @ 18 VDC		
	600 Ω @ 24 VDC		
Accuracy	± 2% of output span		
Resolution	7 µA		
Update Rate	< 600 ms		
Error Indication	22 mA		
Pure Water Compensation	When using 0.01-cm cell and raw conductivity value < 0.5 µS, the 2850 auto-switches to compensate for non-linear temperature effects found in this low conductivity (high resistivity) range.		
Shipping Weight			
	NPT Mount Junction Box	0.75 kg	1.75 lb
	Universal Mount	0.75 kg	1.75 lb
Standards and Approvals			
	CE, FCC		
	RoHS compliant, China RoHS, Made in USA from US and Imported Parts		
	Manufactured under ISO 9001 for Quality and ISO 14001 for Environmental Management and OHSAS 18001 for Occupational Health and Safety		

Signet Model D100 DeviceLink

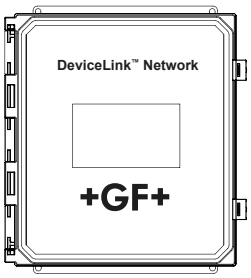

System Overview

In-Line Installation

Panel Mount	4 to 20 mA Output	Automation System
Signet Instruments 8900 9900* 9950  OR 	Customer Supplied Programmable Logic Controller, or Programmable Automation Controller 	0486 Profibus Concentrator and Customer Supplied Programmable Logic Controller or Programmable Automation Controller 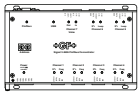 + 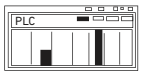

Signet 2850 Conductivity System or 2850 Universal Mount

Fittings - Customer Supplied 3/4 in. NPT or ISO threads

All sold separately

Submersible Installation

Panel Mount	4 to 20 mA Output	Automation System
Signet Instruments 8900 9900* 9950  OR 	Customer Supplied Programmable Logic Controller, or Programmable Automation Controller 	0486 Profibus Concentrator and Customer Supplied Programmable Logic Controller or Programmable Automation Controller 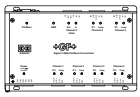 + 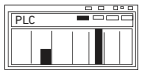

Signet 2850 Universal Mount or NPT Mount Junction Box

Fittings - Customer Supplied 3/4 in. NPT or ISO threads

All sold separately

* If the 2850 is used with the 9900, it is not necessary to use the 9900 conductivity module.

Note:
The 9900 (with Direct Conductivity/Resistivity module) can run all conductivity sensors with 30 m (100 ft) of cable.
The 2850 (S^3L) signal can be used for distances over 30 m (100 ft). The 2850 has a limited sensor cable input length of 4.6 m (15 ft).

Dimensions

2850-5X NPT Mount
Junction Box Systems

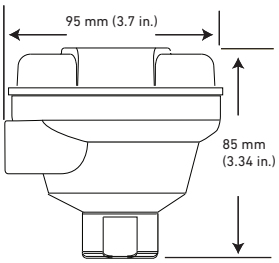

2850-6X
Universal Mount Systems

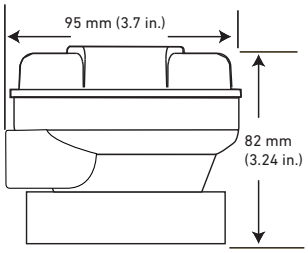

2850-5X-XX-1V(D)
Field (Integral) Mount Systems

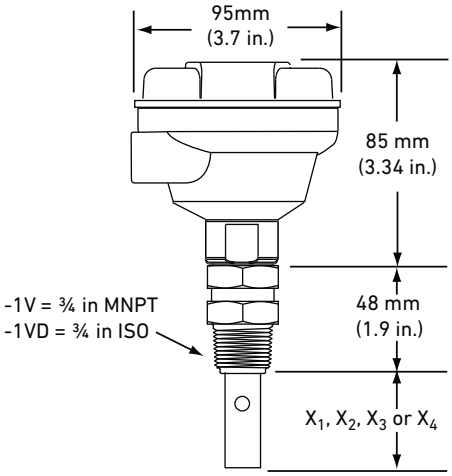

Sensor	Insertion Depth
X1 (3-2839-1V(D))	73 mm (2.88 in.)
X2 (3-2840-1V(D))	35 mm (1.38 in.)
X3 (3-2841-1V(D))	41.3 mm (1.63 in.)
X4 (3-2842-1V(D))	41.3 mm (1.63 in.)

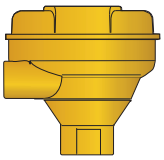

-5X NPT Mount
Junction Box

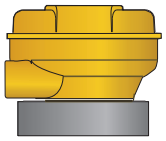

-6X Universal Mount
Junction Box

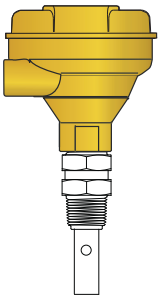

Integral System includes the 2850 sensor electronics and a choice of Conductivity/Resistivity electrode.

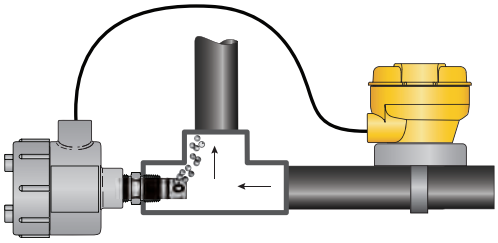

Universal j-box assembly allows sensors without the 3/4 " rear thread to be used.

Field Selectable Ranges for 4 to 20 mA Operation

The chart below indicates the field selectable ranges in which the 2850 sensor electronics can be set via internal switches. All ranges can be inverted if required. Signet Models listed below are compatible Conductivity/Resistivity electrodes.

0.01 Cell	0.10 Cell	1.0 cell	10.0 Cell	20.0 Cell
Signet Model 2839	Signet Model 2840	Signet Model 2841	Signet Model 2842	Signet Model 2823 (Special Order)
10 to 20 MΩ	0 to 2 µS	0 to 20 µS	0 to 200 µS	0 to 400 µS
2 to 10 MΩ	0 to 5 µS	0 to 50 µS	0 to 500 µS	0 to 1,000 µS
0 to 2 MΩ	0 to 10 µS	0 to 100 µS	0 to 1,000 µS	0 to 2,000 µS
0 to 1 MΩ	0 to 50 µS	0 to 500 µS	0 to 5,000 µS	0 to 10,000 µS
0 to 5 MΩ	0 to 100 µS	0 to 1000 µS	0 to 10,000 µS	0 to 20,000 µS
0 to 10 MΩ	0 to 200 µS	0 to 2000 µS	0 to 50,000 µS	0 to 100,000 µS
N/A	0 to 500 µS	0 to 5,000 µS	0 to 100,000 µS	0 to 200,000 µS
N/A	0 to 1,000 µS	0 to 10,000 µS	0 to 200,000 µS	0 to 400,000 µS

The 4 to 20 mA output ranges shown in this chart can be inverted using the internal switch. **Resistivity Ranges are in BOLD**
Note: The 2819-2823 series Integral Systems must be ordered through special order products.

Operating Range Chart

The 2850 is capable of measuring conductivity and resistivity values over a wide range. Below is a chart of Signet Conductivity/Resistivity electrodes (listed in each range box) that is recommended for the specified measurement range.

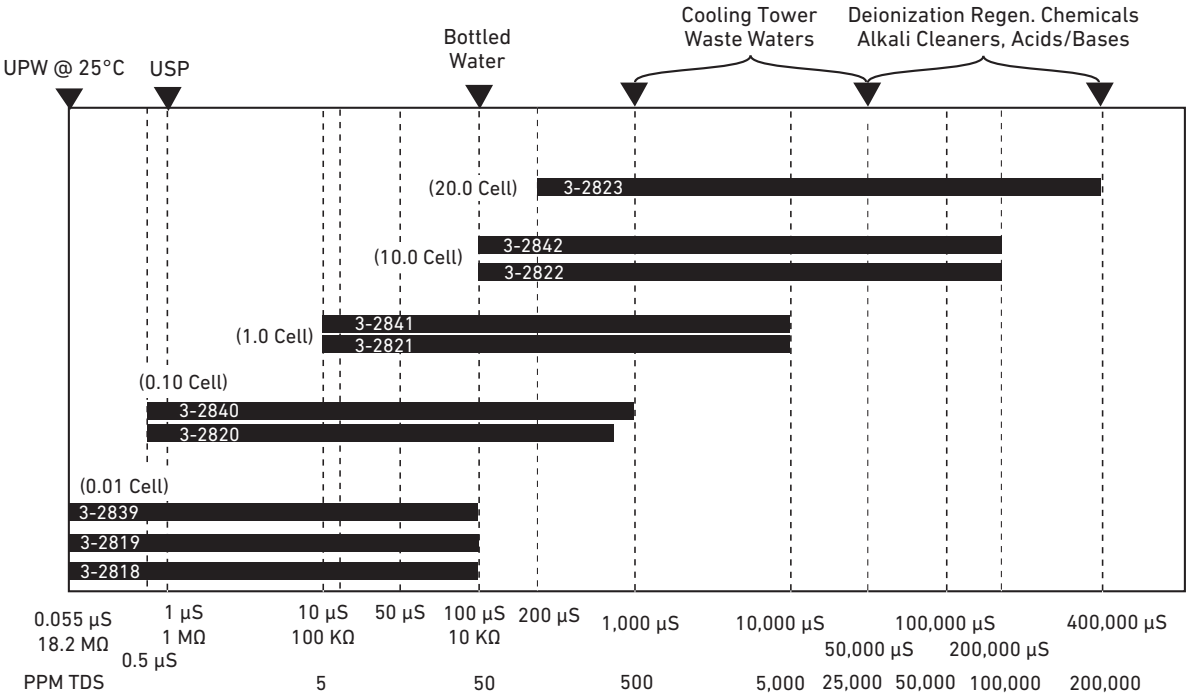

Ordering Notes

1) All 2850 units can be used with any Signet Conductivity/Resistivity electrode
2) Integral systems are only offered with Signet models 2839-2842 electrodes. 2818-2823 require a special order sensor.
3) Dual channel units are only available in the universal mount junction box/remote mount configuration and with digital (S^3L) output for use with the Multi-Parameter instruments.

Application Tips

- Maximum distance between sensor and 2850 electronics is 4.6 m (15 ft).

Please refer to Wiring, Installation, and Accessories sections for more information.

Ordering Information

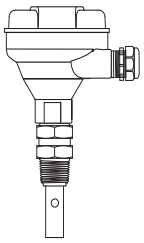

Mfr. Part No.	Code	Sensor	Process Threaded Connection
2850 Integral Mount Systems, PVDF* (includes Sensor Electronics and PVDF Electrodes) with EasyCal			
Digital (S^3L) output			
3-2850-51-39V	**159 001 818**	2839 Electrode, 0.01 cell	NPT threads
3-2850-51-40V	**159 001 819**	2840 Electrode, 0.1 cell	NPT threads
3-2850-51-41V	**159 001 820**	2841 Electrode, 1.0 cell	NPT threads
3-2850-51-42V	**159 001 821**	2842 Electrode, 10.0 cell	NPT threads
3-2850-51-39VD	**159 001 822**	2839 Electrode, 0.01 cell	ISO threads
3-2850-51-40VD	**159 001 823**	2840 Electrode, 0.1 cell	ISO threads
3-2850-51-41VD	**159 001 824**	2841 Electrode, 1.0 cell	ISO threads
3-2850-51-42VD	**159 001 825**	2842 Electrode, 10.0 cell	ISO threads
4 to 20 mA output			
3-2850-52-39V	**159 001 826**	2839 Electrode, 0.01 cell	NPT threads
3-2850-52-40V	**159 001 827**	2840 Electrode, 0.1 cell	NPT threads
3-2850-52-41V	**159 001 828**	2841 Electrode, 1.0 cell	NPT threads
3-2850-52-42V	**159 001 829**	2842 Electrode, 10.0 cell	NPT threads
3-2850-52-39VD	**159 001 830**	2839 Electrode, 0.01 cell	ISO threads
3-2850-52-40VD	**159 001 831**	2840 Electrode, 0.1 cell	ISO threads
3-2850-52-41VD	**159 001 832**	2841 Electrode, 1.0 cell	ISO threads
3-2850-52-42VD	**159 001 833**	2842 Electrode, 10.0 cell	ISO threads

*For use when an integral 2850 system is desired (uses 2839-2842 series electrodes). Integral systems are shipped with a sensor and 2850 combined. Other 2850 systems are available with Signet 2818 to 2823 electrodes upon request. See individual electrode product pages for more information.

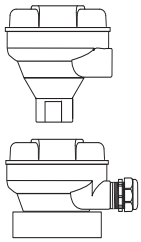

Mfr. Part No.	Code	Output
2850 Sensor Electronics** with EasyCal		
NPT mount junction box (¾ inch threaded) for standpipe or integral mounting, single input only		
3-2850-51	**159 001 398**	One input/one digital (S^3L) output for use with 8900, 9900 or 9950
3-2850-52	**159 001 399**	One input/one 4 to 20 mA output
Universal mount junction box for remote mount, single or dual input		
3-2850-61	**159 001 400**	One input/one digital (S^3L) output for use with 8900 or 9900
3-2850-62	**159 001 401**	One input/one 4 to 20 mA output
3-2850-63	**159 001 402**	Dual input, dual (S^3L) output for use with 8900 only

**For use when remote sensor mounting is desired. Compatible with ALL Signet conductivity electrodes. See individual electrode product pages for more information.

Accessories and Replacement Parts

Mfr. Part No.	Code	Description
3-2850.101-1	**159 001 392**	Plug-in NIST traceable recertification tool, 1.0 µS simulated
3-2850.101-2	**159 001 393**	Plug-in NIST traceable recertification tool, 2.5 µS simulated
3-2850.101-3	**159 001 394**	Plug-in NIST traceable recertification tool, 10.0 µS simulated
3-2850.101-4	**159 001 395**	Plug-in NIST traceable recertification tool, 18.2 MΩ simulated
3-2850.101-5	**159 001 396**	Plug-in NIST traceable recertification tool, 10.0 MΩ simulated
3-2839-1V	**159 001 799**	Electrode PVDF/SS- 0.01 µS/cm, ¾ inch NPT, 4.6 m (15 ft) cable
3-2839-1VD	**159 001 800**	Electrode PVDF/SS- 0.01 µS/cm, ISO 7/1-R 3/4, 4.6 m (15 ft) cable
3-2840-1V	**159 001 801**	Electrode PVDF/SS- 0.1 µS/cm, ¾ inch NPT, 4.6 m (15 ft) cable
3-2840-1VD	**159 001 802**	Electrode PVDF/SS- 0.1 µS/cm, ISO 7/1-R 3/4, 4.6 m (15 ft) cable
3-2841-1V	**159 001 803**	Electrode PVDF/SS- 1.0 µS/cm, ¾ inch NPT, 4.6 m (15 ft) cable
3-2841-1VD	**159 001 804**	Electrode PVDF/SS- 1.0 µS/cm, ISO 7/1-R 3/4, 4.6 m (15 ft) cable
3-2842-1V	**159 001 805**	Electrode PVDF/SS- 10.0 µS/cm, ¾ inch NPT, 4.6 m (15 ft) cable
3-2842-1VD	**159 001 806**	Electrode PVDF/SS- 10.0 µS/cm, ISO 7/1-R 3/4, 4.6 m (15 ft) cable
5523-0322V	**159 001 807**	Sensor cable (per ft), 3 cond. plus shield, 22 AWG

Note: Although a customer can extend the cable of a conductivity sensor, GF Signet does not recommend this, and offers extended cable lengths from the factory.

Signet Conductivity/Resistivity Tool

2850.101-X

The Signet Conductivity/Resistivity tool is available for certification or validation of electronics that are independent of the electrode. Because there are no available liquid standards for calibration in low conductivity and resistivity applications, the tool is ideal for various installations. The tool is built to conform to the ASTM D 1125-95 Standard (Standard Test Methods for Electrical Conductivity and Resistivity of Water), which is also commonly used for USP 24 applications.

The Signet Conductivity/Resistivity tool simulates within ±0.1% precision (accuracy), various values: 1.0 µS, 2.5 µS, 10.0 µS, 10.0 MΩ, 18.2 MΩ. The tool is also temperature compensated to 25 °C and enables the user to accurately validate or certify the electronics.

The 2850.101-X simulators are used with the Model 9900 and Model 2850 electronics by simply plugging into the same terminals as the sensor cables.

Features

- **Available in five different values**
- **Compatible with 3-2850 electronics when used with the 8900 Multi-Parameter Controller, 9900 or 9950 Transmitter or as a stand-alone 4 to 20 mA output**
- **Verifies electronics independent of electrode**
- **NIST traceable units**
- **Temperature compensated to 25 °C**
- **All units ship with NIST traceable certificates**

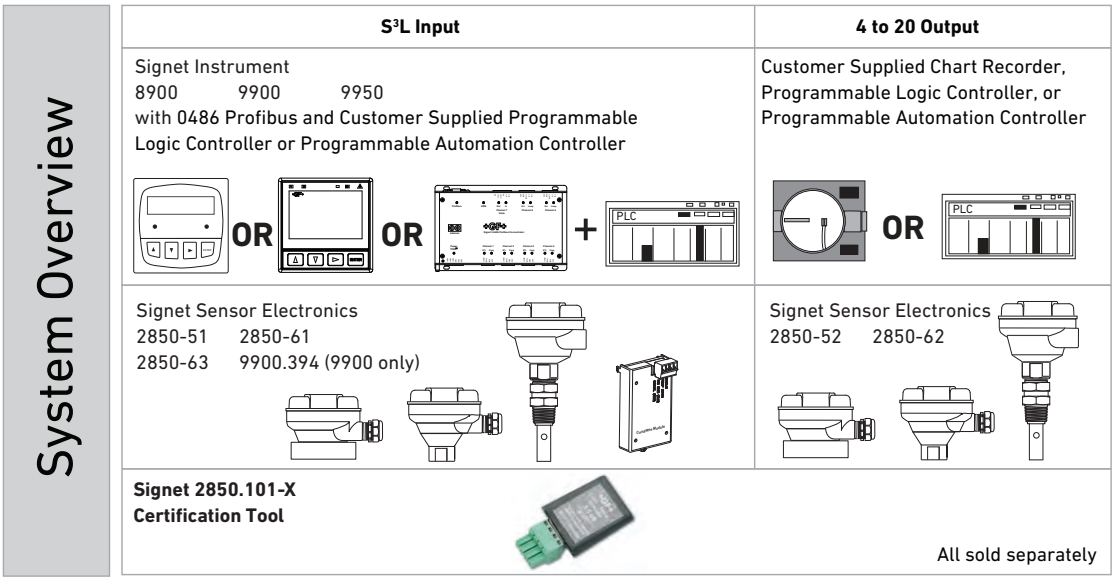

Wiring

3-2850-XX

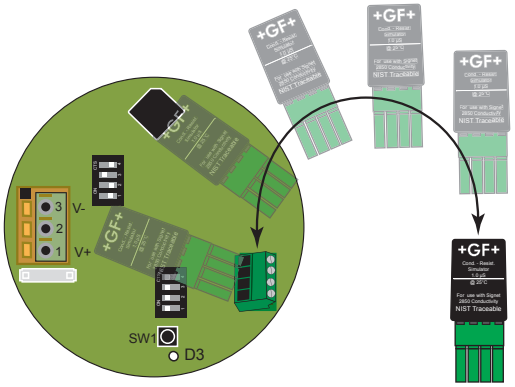

3-9900

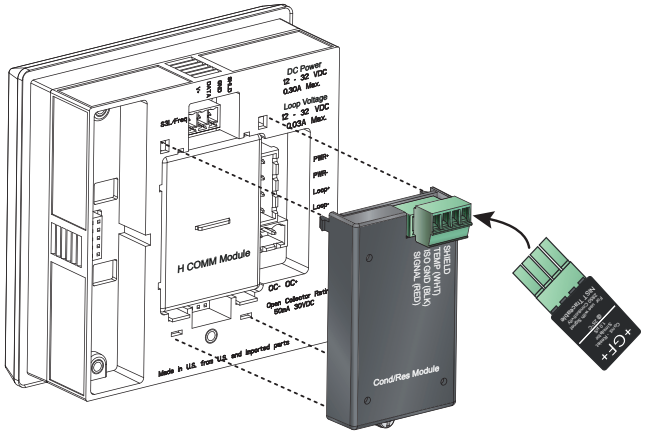

3-9950

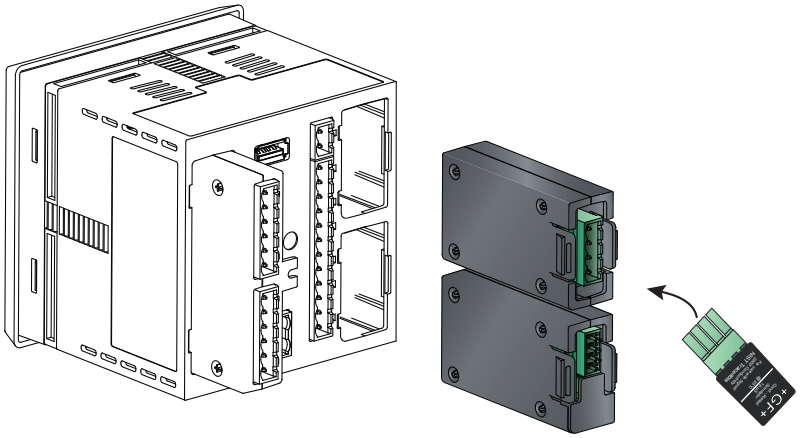

Ordering Information

Mfr. Part No.	Code	Description
3-2850.101-1	**159 001 392**	Plug-in NIST traceable tool, 1.0 µS simulated for Signet Models 2850-5X, 2850-6X
3-2850.101-2	**159 001 393**	Plug-in NIST traceable tool, 2.5 µS simulated for Signet Models 2850-5X, 2850-6X
3-2850.101-3	**159 001 394**	Plug-in NIST traceable tool, 10.0 µS simulated for Signet Models 2850-5X, 2850-6X
3-2850.101-4	**159 001 395**	Plug-in NIST traceable tool, 18.2 MΩ simulated for Signet Models 2850-5X, 2850-6X
3-2850.101-5	**159 001 396**	Plug-in NIST traceable tool, 10.0 MΩ simulated for Signet Models 2850-5X, 2850-6X

Signet Conductivity/Resistivity Instrument

	D100	9950
Description	DeviceLink™ Network	Multi-Channel (2 Channel), Multi-Parameter Controller
Modular Components		Yes
Max. Sensor Inputs	1 Permanent, 1 Resettable per channel of Flow input	2 frequency or S^3L inputs
Mounting Options	Up to 12 channels, programmable for Digital (S^3L), frequency or 4 to 20 mA input, depending on package selected and (2) Modbus via 9900 or 9950.	Panel
Display	Panel	LCD, Dot matrix
Analog Output Types	7 in. LCD touch screen or web browser, PC, smartphone, or tablet	(2) Passive 4 to 20 mA Outputs, Standard Up to six via optional modules (optional relay module)
Max. Relays	Up to (4) passive 4 to 20 mA loop outputs	4 Dry-Contact Relays or 2 Mechanical and 2 Solid State Relays (optional relay module)
Derived Measurements	Up to (4) Dry-Contact, programmable relay	6 Derived Measurements Sum, Delta (Difference), Ratio, % Passage% Reject, % Recovery
Languages	N/A	English, French, German, Spanish and Simplified Chinese
Ambient Temperature (°C) Storage Temperature (°F)	English	DC -10 °C to 70 °C (14 °F to 158 °F) AC -10 °C to 60 °C (14 °F to 140 °F) -15 °C to 70 °C (5 °F to 158 °F)
Relative Humidity	AC -10 °C to 50 °C (14 °F to 122 °F) DC -10 °C to 60 °C (14 °F to 140 °F) Display Models: -10 °C to 60 °C (14 °F to 140 °F) Storage Temp: -15 °C to 70 °C (5 °F to 158 °F)	0 to 95%, non-condensing
Power Requirements	0 to 99% condensing environment	DC - 24 VDC nominal (12 to 32 VDC, ±10% regulated) AC - 100 to 240 VAC, 50 to 60 Hz, 24 VA
Standards and Approvals	DC - 24 VDC nominal (10.8 to 35.2 VDC regulated) 500 mA maximum AC - 100-240 VAC, ±10%, regulated 50-60 Hz, 24 VA max	CE, FCC, UL, CUL, RoHS compliant, China RoHS, NEMA TYPE 4X/IP65 (front face only on panel mount)

Specification Matrix

	9900 - Panel Mount	8900
Description	Single-Channel, Multi-Parameter Transmitter	Multi-Channel (4 or 6 Channel), Multi-Parameter Controller
Modular Components	Yes	Yes
Max. Sensor Inputs	1 Permanent 1 Resettable	6 Permanent 6 Resettable
Mounting Options	Panel, Wall, Pipe, Tank	Panel
Display	LCD with digital bar graph	LCD
Analog Output Types	(2) Passive 4 to 20 mA (1) Standard, (1) Optional with 4 to 20 mA Output module HART optional with H COMM module	(4) Passive/Active 4 to 20 mA or (4) 0 to 5/10 VDC
Max. Relays	(1) open collector (standard) (2) relays (optional relay module)	up to 8 relays (via 8059)
Derived Measurements	N/A	Sum, Difference, % Recovery, % Reject, % Passage, Ratio, Power (BTU)
Languages	English	English, French, German, Spanish, Italian, and Portuguese
Operating Temperature (°C) **Operating Temperature (°F)**	-10 °C to 70 °C (14 °F to 158 °F) -15 °C to 70 °C (5 °F to 158 °F)	-10 °C to 55 °C (14 °F to 131 °F) -15 °C to 80 °C (5 °F to 176 °F)
Relative Humidity	0 to 95% non-condensing	0 to 95%, non-condensing
Power Requirements	24 VDC input; range: (10.8 to 35.2 VDC regulated)	12 to 24 VDC ±10%, regulated or 100 to 240 VAC ±10%, regulated, 50/60 Hz
Standards and Approvals	CE, FCC, UL, CUL, RoHS compliant, Lloyd's Register, China RoHS, NEMA TYPE 4X/ IP65 (front face only on panel mount); field mount is 100% NEMA TYPE 4X/IP65	CE, FCC, UL, CUL, RoHS compliant, China RoHS NEMA 4X/IP65 (front face only)

Signet Level Specification Matrix




	2250 Hydrostatic	2260 Ultrasonic	2270 Ultrasonic	2280 Vibration Forks
Point or Continuous Level	Continuous	Continuous	Continuous	Point
Range (From Sensor Tip)	0 to 10 psig (0-23 ft), 0 to 50 psig (0-115ft)	0.2 to 4 m (0.65 to 13 ft) 0.25 to 6 m (0.82 to 20 ft) 0.45 to 15 m (1.5 to 49 ft)	0.2 to 4 m / 0.65 to 13 ft, 0.25 to 6 m / 0.82 to 20 ft	N/A
Output Type	(S^3L) or 4 to 20 mA	4 to 20 mA (HART/ Relay-Optional)	4 to 20 mA / HART	2-wire AC; 3-wire PNP-NPN, 1 SPDT relay
Power Requirement	5 to 6.5 VDC (S^3L), 12-24 VDC (4 to 20 mA)	12 to 36 VDC	12 to 36 VDC	12 to 55 V DC or 20 to 255 V AC, 50/60 Hz, 20 to 255 V AC and 20 to 60 V DC
Tank Top	No	Yes	Yes	Yes
Submersible	Yes	No	No	Yes
Tank Side Mount	Yes	No	No	Yes
Open Channel (Flow)	No	Yes	Yes	No
Process Connection	½ in. union male thread	1½" 2", or 5"ANSI Flange	1½" or 2"	1"
ATEX (Intrinsically Safe)	No	Optional	No	Optional
Body Material	PVDF, Ceramic, FKM	PP/EPR (EPDM) or PVDF/FKM	PP/EPR (EPDM) or PVDF/FKM	Stainless Steel DIN 1.4571

	2281 Conductive Multipoint	2282 Guided Float	2284 Ultrasonic Gap (PPS)	2285 Float Switch	2290 Unguided Radar	2291 Guided Wave Radar
Point or Continuous level	Point	Point	Point	Point	Continuous	Continuous
Range (From Sensor Tip)	20", 40", 59" (72", 108" on request)	N/A	N/A	Cable Length 5 m (16.5 ft), 10 m (33 ft), 20m (66 ft)	0.2 m – 18 m (0.65 – 59 ft) (depending on εr of the process liquid)	Cable 6 m (19.6 ft) Rod 2 m (6.56 ft) Both customer adjustable
Output Type	SPDT (1-4 outputs, optional)	Reed Contact	Single pole, center off / switch with stable, contactless middle position	Microswitch (SPDT)	4 to 20 mA / HART	
Power Requirement	24 VAC or VDC	N/A	18 to 30 VDC / AC	N/A	20 V ...36 V DC	18 V... 35 V DC
Tank Top	Yes	No	Yes	No	Yes	Yes
Submersible	No	Yes	Yes	Yes	No	Cable/ rod only
Tank Side Mount	No	Yes	Yes	No	No	No
Open Channel (Flow)	No	No	No	No	No	No
Process Connection	1 1/2"	1/2"	3/4" or 1"	N/A	1½"	1"
ATEX (Intrinsically Safe)	No	No	No	No	Optional	Optional
Body Material	PBT/PP (Enclosure), Stainless Steel (probes)	PP or PVDF	PPS	PP (body), PVC (cable)	Horn: Stainless Steel; enclosure: PP, PTFE	Rod/Cable - 316 SS Special order coated versions available

Signet Level Application Matrix




	2250 Hydrostatic	2260 Ultrasonic	2270 Ultrasonic	2280 Vibration
Point Level	-	-	-	+
Continuous Level	+	+	+	-
Volume Measurement	+	+	+	-
Flow Measurement	-	+	+	-
Submersible	+	-	-	-
Tank Side Mount	+	-	-	+
Non Contacting	-	+	+	-
Vapors / Density Changes	+	o	o	+
Clean Fluid	+	+	+	+
Solids in Fluid	o	+	+	o
Residues	o	+	+	o
Some Surface Agitation	+	o	o	o
High Surface Agitation	o	-	-	-
Light Surface Foam	+	o	o	o
Dense Surface Foam	+	-	-	-
Intrinsically Safe	-	*	-	*

Recommended	+
Conditionally Suitable	o
Not Recommended	-
Specific Part Number	*




	2281 Conductive Multipoint	2282 Guided Float	2284 Ultrasonic Gap (PPS)	2285 Float Switch
Point Level	+	+	+	+
Continuous Level	-	-	-	-
Volume Measurement	-	-	-	-
Flow Measurement	-	-	-	-
Submersible	o	+	+	+
Tank Side Mount	-	+	+	-
Non Contacting	-	-	-	-
Vapors / Density Changes	o	+	+	+
Clean Fluid	+	+	+	+
Solids in Fluid	o	-	+	+
Residues	-	-	+	+
Some Surface Agitation	+	o	o	+
High Surface Agitation	o	-	-	+
Light Surface Foam	o	-	-	+
Dense Surface Foam	-	-	-	+
Intrinsically Safe	-	-	-	-

Signet 2250 Submersible Hydrostatic Pressure Sensor For Level and Depth Control

Blind Transmitter or Digital (S^3L) Sensor

The Signet 2250 Hydrostatic Level Sensor for level and depth control has a one-piece injection molded PVDF body and ceramic diaphragm for superior compatibility in corrosive liquids. Utilizing hydrostatic pressure, the 2250 disregards false level signals from steam vapors, foam or any other debris on the liquid surface. Two pressure ranges allow for optimal resolution matched to your sensing needs. Solid state circuitry eliminates drift (no internal potentiometers).

These sensors are available with a proprietary digital (S^3L) output, or 4 to 20 mA output. The extended cable and capillary tubing with the union connection and a customer supplied conduit, allow submersion in process vessels.

Features

- **Level and depth measurement**
- **4 to 20 mA or digital (S^3L) output**
- **Flush ceramic diaphragm**
- **Easy submersible installation**
- **Choice of two pressure ranges**
- **Standard union connection and extended cable and capillary tubing (10 m)**

Applications

- **Inventory Management**
- **Storage Tank Monitoring**
- **Neutralization Tanks**
- **Plating Lines**
- **Waste Sumps**
- **Clarifiers**
- **Overflow Protection**

Specifications

General		
Output		Digital (S^3L) or 4 to 20 mA
Accuracy for all pressure ranges		±1% of full scale
Resolution	-XU	0.001 psi
	-XL	0.01 psi
Response Time		<100 ms
Wetted Materials		
Union and Union Bushing		PVC-U
Sensor Housing		PVDF
Diaphragm		Ceramic
Diaphragm Seal		FKM
Electrical		
Power Requirements		
	Digital (S^3L)	5 to 6.5 VDC <1.5 mA (power supplied by the 8900, 9900, 9950 and 0486)
	4 to 20 mA	12 to 24 VDC ±10%, regulated
Cable Length		10 m (32.8 ft)
Cable Type		3 cond. plus shield, 22 AWG, PVC jacketed, Blk/Red/White/Shld with capillary tube
Digital (S^3L) Output		Serial ASCII, TTL level 9600 bps.
		Reverse polarity and short circuit protected.
4 to 20 mA Output		
Accuracy		±32 µA
Resolution		<5 µA
Span		4 to 20 mA factory calibrated to operating ranges shown below
Max. Loop Impedance		100 Ω @ 12 V
		325 Ω @ 18 V
		600 Ω @ 24 V
Max. Temperature/Pressure Rating		
Operating Temperature		-15 °C to 85 °C / 5 °F to 185 °F
Storage Temperature		-20 °C to 100 °C / -4 °F to 212 °F
Operating Pressure		-XU: 0 to 0.7 bar (0 to 10 psig)
		-XL: 0 to 3.4 bar (0 to 50 psig)
Proof Pressure		-XU: 1.4 bar (20 psig)
		-XL: 5.2 bar (75 psig)
Shipping Weight		
		0.560 kg / 1.23 lb
Standards and Approvals		
		CE, FCC
		RoHS compliant, China RoHS, Made in USA from US and Imported Parts
		Manufactured under ISO 9001 for Quality and ISO 14001 for Environmental Management and OHSAS 18001 for Occupational Health and Safety

See Temperature and Pressure graphs for more information.

Dimensions

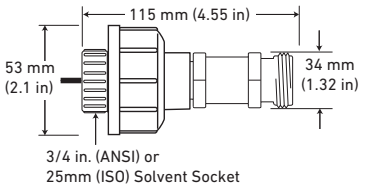

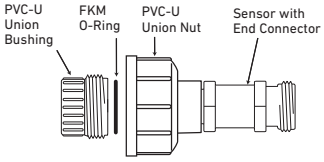

Signet Model D100 DeviceLink

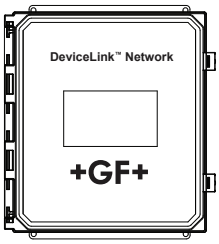

Submersible Installation

System Overview

Pipe, Tank, Wall Mount	4 to 20 mA Output	Automation System
Signet Instruments 8900 9900 with 3-8050-1 Universal Mount Kit or 3-8052-1 Integral Mount Kit 9900-1P with Rear Enclosure 9950 with 3-8050-1 Universal Mount Kit or 3-8052-2 Integral Mount Kit	3-8050-1 Universal Mount Kit or 3-8052-1 Integral Mount Kit with a Customer Supplied Programmable Logic Controller	3-8050 Universal Mount Kit or 3-8052 Integral Mount Kit with 0486 Profibus Concentrator and Customer Supplied Programmable Logic Controller or Programmable Automation Controller

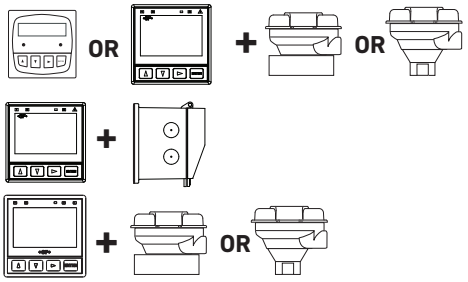

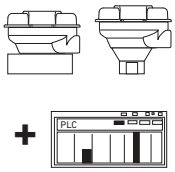

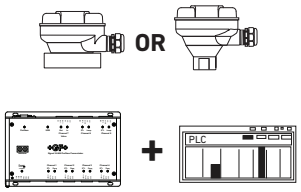

Customer supplied pipe extension or conduit with pipe assembly

Signet 2250 Submersible Hydrostatic Pressure Sensor with union connection, extended cable and capillary tubing (10 m)*

All sold separately

* Cable must be exposed to the atmosphere

Ordering Notes

1) Instrument is sold separately. The following instrument part numbers are compatible with the 2250: 8900, 9900, 9950 and 0486 Profibus Concentrator.
2) Union mount installs into pipe w/end connector and union nut.

Pressure/Level ranges*	
3-2250-XU	0 to 10 psi = 0 to 7.03 m = 0 to 23.06 ft
3-2250-XL	0 to 50 psi = 0 to 35.15 m = 0 to 115.32 ft

*Ranges calculated using specific gravity of water. Maximum ranges depending on its specific gravity.

Temperature/Pressure Graphs

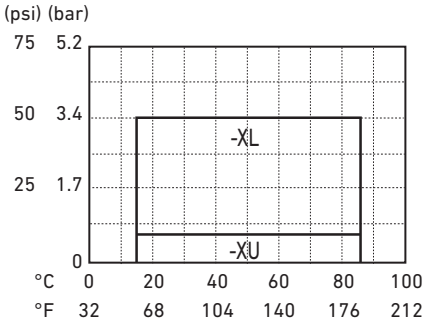

Please refer to Wiring, Installation, and Accessories sections for more information.

Ordering Information

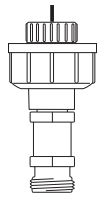

Mfr. Part No.	Code	Sensor Output	Operating Pressure
Hydrostatic Level Sensor with ½ in. union connector			
PVC Union connection - ¾ in. pipe connection			
3-2250-11L	**159 001 241**	NPT, digital (S^3L), 35 m (115 ft)	0 - 3.4 bar (0-50 psi)
3-2250-11U	**159 001 242**	NPT, digital (S^3L), 7 m (23 ft)	0 - 0.7 bar (0-10 psi)
3-2250-21L	**159 001 247**	NPT, current (4 to 20 mA), 35 m (115 ft)	0 - 3.4 bar (0-50 psi)
3-2250-21U	**159 001 248**	NPT, current (4 to 20 mA), 7 m (23 ft)	0 - 0.7 bar (0-10 psi)
PVC Union connection - Metric pipe connector			
3-2250-11U-1	**159 001 478**	ISO, digital (S^3L), 7 m (23 ft)	0 - 0.7 bar (0-10 psi)
3-2250-11L-1	**159 001 479**	ISO, digital (S^3L), 35 m (115 ft)	0 - 3.4 bar (0-50 psi)
3-2250-21U-1	**159 001 482**	ISO, current (4 to 20 mA), 7 m (23 ft)	0 - 0.7 bar (0-10 psi)
3-2250-21L-1	**159 001 483**	ISO, current (4 to 20 mA), 35 m (115 ft)	0 - 3.4 bar (0-50 psi)

Accessories and Replacement Parts

Mfr. Part No.	Code	Description
3-8052	**159 000 188**	¾ in. Integral mounting kit
3-8052-1	**159 000 755**	¾ in. NPT mount junction box with one liquid tight connector and cap with junction terminals
3-8050	**159 000 184**	Universal mount kit
3-8050-1	**159 000 753**	Universal mount junction box
3-9000.392-1	**159 000 839**	Liquid tight connector kit, NPT (1 connector)
3-9000.392-2	**159 000 841**	Liquid tight connector kit, PG 13.5 (1 connector)
3-0252	**159 001 808**	Configuration Tool

2290 Non-contact Radar Level Transmitter

PP

The 25 GHz (K-band) 2290 Pulse Radars are the most progressive non-contact level transmitter technology for industrial processes. With an excellent accuracy, compact antennas and a user-friendly set-up the 2290 is an effective, simple, low cost choice for demanding level applications. GF's new K-band radar featuring ±3 mm (±0.1inch) accuracy and short dead band excels with its full plastic housing. Its antenna range incorporates a stainless steel horn and enclosed plastic enclosure choices.

The enclosed antenna versions can be replaced without removing the antenna enclosure from the process. Local programming of type 2290 is aided by a plug-in display module. The signal processing algorithm of the 2290 is based on years of experience with non-contact level measurement making it an excellent choice for applications simple and challenging alike.

Features

- **19° beam angle**
- **Tank mapping function**
- **Large dot matrix LCD display**
- **Predefinded tank shapes**
- **Works with fumes, condensation, and light foam layers**

Applications

- **Bulk Storage Tanks**
- **Day Tanks**
- **Process vessels for Mixing and Batching**
  - **Buffer Tanks**
  - **Conditioning vessels**
  - **Metal or Plastic**

Dimensions

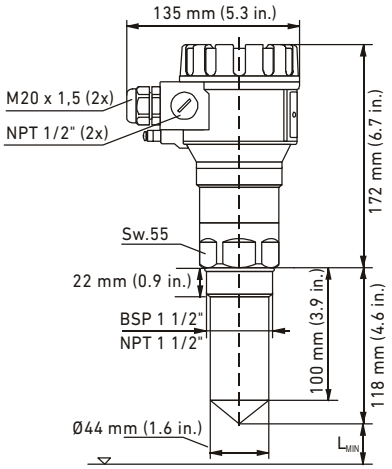

Horn antenna with PP enclosure
Lmin: 200 mm (7.9 inch)

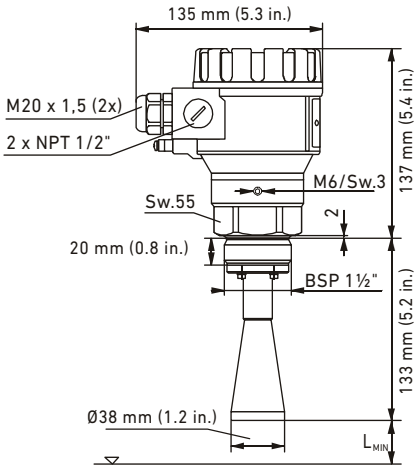

Stainless Steel 316 Ti horn antenna
Lmin: 200 mm (7.9 inch)

Specifications

General		
Measured Values		Level, Distance; Calculated values: Volume, Mass
Wetted Parts	Horn Anntenna	Stainless Steel 316 Ti
	Antenna enclosure	PTFE or PP
Frequency of the Measuring Signal		~25 GHz (K-band)
Measuring Range		0.2 m – 18 m (0.65 – 59 ft) (depending on εr of the process liquid)
Accuracy		±3 mm (0.1 inch)
Linearity Error (as per EN 61298-2)		< 0.5 m: ±25 mm (< 1.6 ft: ±0.9 inch); 0.5 – 1 m: ±15 mm (1.6 – 3.2 ft: ±0.6 inch); 1 – 1.5 m: ±10 mm (3.2 – 4.9 ft: ±0.4 inch); 1.5 – 8 m: ±3 mm (4.9 – 26.3 ft: ±0.1 inch); > 8 m: ±0.04% (> 26.3 ft: ±0.04%) of the measured distance
Beam Angle		Minimum 19°
Minimum dielectric constant ε_r of the Medium		1.9 (refer to range diagram below)
Resolution		1 mm (0.04 in.)
Temperature Error (as per EN 61298-3)		0.05% FSK / 10 °C (50 °F) -20 °C... +60 °C (-68 °F... +140 °F)
Power Supply Voltage		20 V ...36 V DC
Output Digital Communication		4 – 20 mA + HART
Output Display		64 x 128 Dot Matrix LCD Graphical display unit
Measuring Frequency		10...60 sec as per the application settings
Antenna Diameter		38 mm (1 ½")
Antenna Material		Horn: Stainless Steel; enclosure: PP or PTFE
Medium Process Temperature		-30 °C... +100 °C (-22 °F - 212 °F), (up to 120 °C (248 °F) for max. 2 min); with PP antenna enclosure: max.: 80 °C (176 °F)
Maximal Medium Pressure		25 bar at 120 °C (248 °F); with plastic antenna enclosure: 3 bar at 25 °C (77 °F)
Ambient Temperature		-20 °C... +60 °C (-4 °F - 140 °F)
Process Connection		DN 40 / 1 ½" BSP, 1 ½" NPT" thread
Ingress Protection		IP 67
Electrical Connection		2x M 20 x 1.5 cable glands + internal thread for 2x ½" NPT cable protective pipe, cable outer diameter: Ø 7 ... Ø 13 mm (0.3 ... 0.5 inch), wire cross section: max. 1.5 mm^2 (AWG 15), wire cross section: max. 1.5 mm^2
Electrical Protection		Class III
Housing Material		Plastic (/PBT)
Sealing		FKM
Communication Certifications		R&TTE, FCC
EX-Approvals		ATEX (ia): II 1/2 G Ex ia IIB T6...T5 Ga/Gb ICEX (ia): EX ia IIB T6...T5 Ga/Gb CE, FCC, Imported from Europe

Measurement Range Diagram*

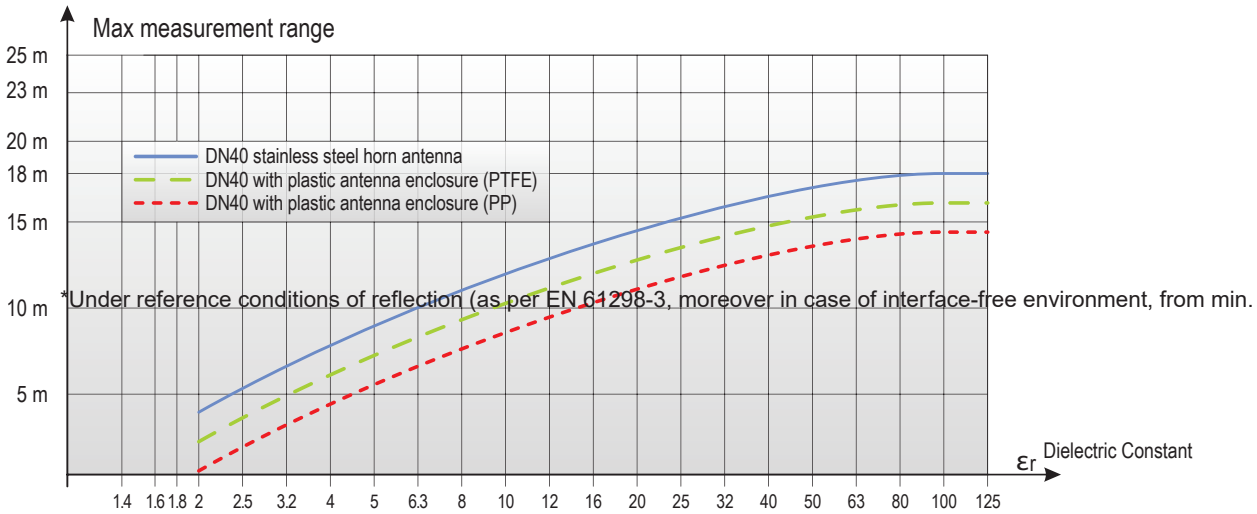

Under reference conditions of reflection (as per EN 61298-3, moreover in case of interface-free environment, from min. 10 m² target surface) and stabilized termperature.

Connections / Wiring

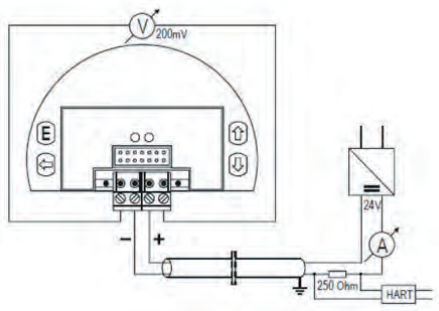

Standard wiring & conecction of HART-Modem

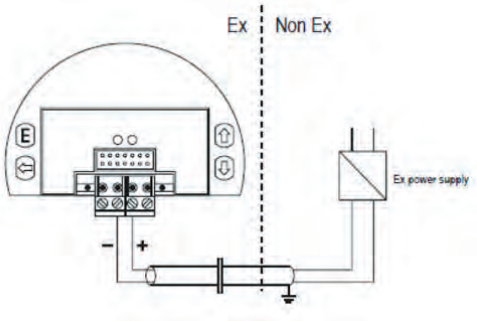

Wiring in an EX-enviroment

To iGo Converter – (S³L) / 4 to 20 mA

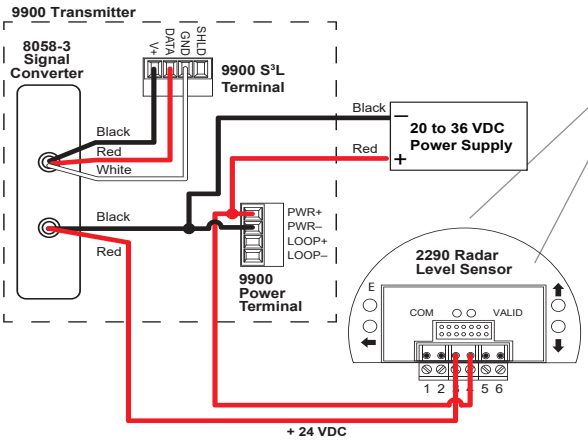

2290 Housing must be grounded, use screw terminal on housing (EP) to earth ground.

Pin No.	Assignment
1	Not Assigned
2	(+) Voltage measuring connector (200 mV)
3	(-) 4-20 mA loop current + supply (HART)
4	(+) 4-20 mA loop current + supply (HART)
5	(-) Voltage measuring connector (200 mV)
6	Not Assigned

Ordering Information

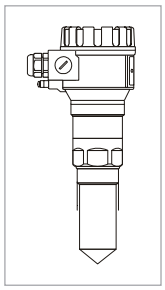

Mfr. Part No	Code	Description
2290-P-1DN2-18	**159 300 185**	2290 Radar Level Transmitter, LCD, PP/ PBT housing, 1 ½" NPT
2290-S-DN2-18	**159 300 187**	2290 Radar Level Transmitter, LCD, PBT housing/SS316 Ti antenna, 1 ½" NPT
2290-F-DN2-18	**159 300 207**	2290 Radar Level Transmitter, LCD, PBT housing/ PTFE antenna, 1 ½" NPT
2290-P-1DN2X-18	**159 300 195**	2290 EX Radar Level Transmitter, LCD, PP/ PBT housing, 1 ½" NPT
2290-S-DN2X-18	**159 300 197**	2290 EX Radar Level Transmitter, LCD, PBT housing/SS316 Ti antenna, 1½" NPT
2290-F-ENC-N2	**159 300 189**	PTFE antenna enclosure, 1 1/2" NPT

Accessories

Mfr. Part No	Code	Description
	159 300 181	HART - USB Modem
3-8058-3	**159 000 966**	Wire-mount Signet i-Go signal (4 to 20 mA /S^3L) converter to connect 2290 to 9900 Transmitter, 9950 Dual Channel, 8900 Multi-Parameter Controller. Single input
3-8058-2	**159 300 967**	DIN rail mount Signet i-Go (4 to 20 mA /S^3L) converter to connect 2290 to 9900 Transmitter, 8900 Multi-Parameter Controller. Two inputs
3-9900-1P	**159 001 695**	9900 Transmitter - Panel Mount
3-9900-1	**159 001 696**	9900 Transmitter - Field Mount
3-9950-1	**159 001 841**	9950 Base Unit – Two Channel Multi-Parameter Inputs, Two 4 to 20 mA Outputs, Panel Mount, DC Power
3-9950-2	**159 001 842**	9950 Base Unit – Two Channel Multi-Parameter Inputs, Two 4 to 20 mA Outputs, Panel Mount, AC or DC Power

2291 Guided Wave Radar Level Transmitter

The 2291 Guided Wave Radar level transmitter is designed for continuous level measuring of conductive or non-conductive liquids, pulps and solids. The 2291 level gauge operates based on the well-known TDR (Time Domain Reflectometry) principle. Micropulses are sent along a probe guide at the speed of light. As soon as the impulse reaches the surface of the medium, it is reflected back to the electronic module. Level distance is directly proportional to the flight time of the impulse.

The reflected signal is dependent on the dielectric constant of the material; the feasibility of the measurement is $\varepsilon_r \geq 1.9$. The TDR technology is unaffected by the properties of the medium as well as that of the space above it. Measurement is also unaffected by the change in the physical properties of the materials such as temperature, pressure, dielectric constant.

Features

- **Measuring range up to 6 m (19.6 ft)**
- **Accuracy: ± 5 mm (0.2 in)**
- **PP / PFA coated probes available on request**
- **Rod & cable versions available**
- **Minimum ε_r 1.9**
- **2-wire version**
- **Graphic LCD display**
- **4 to 20 mA + HART output**
- **Medium temperature range: -30 °C to +90°C (-22 °F to +194 °F)**
- **Maximum process pressure: 40 bar (580 psi)**
- **IP67 protection**

Applications

- **Inventory Tanks**
- **Day Tanks**
- **Process Vessels for Mixing & Batching**
- **Bypass Applications (requires calibration)**
- **Stilling-wells**
- **Powders**
- **Slightly Conductive Foams**
- **Low Dielectric Constant Liquids**

Dimensions

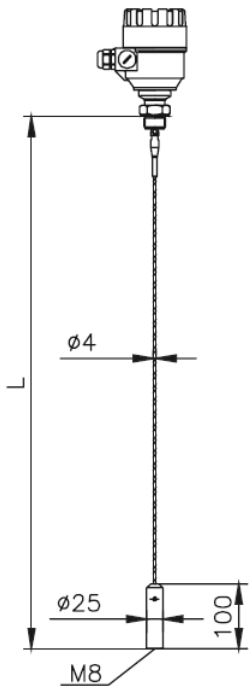

Type 2291 Cable Version
L = 6 m (19.69 ft)

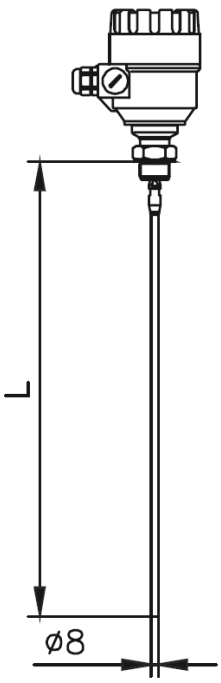

Type 2291 Rod Version
L = 2 m (6.56 ft)

Specifications

General	
Measured Values	Level, Distance; Calculated values: Volume, Mass
Measuring Range	Depends on the probe type and dielectric constant (ε_r) of the measured medium
Probe Types	Mono cable, mono rod
Accuracy: Linearity Error[1]	For liquids: ± 5 mm (0.2 inch), if probe length ± 10 m (32 feet): ± 0.05 % of the probe length
Accuracy: Resolution	± 3 µA
Minimal ε_r of the Medium	1.9
Power Supply	18 V... 35 V DC
Output: Digital Communication	4-20 mA + HART
Output: Display	Graphical LCD display unit
Medium Temperature	-30 °C... +90 °C (-22 °F... +194 °F),
Maximum Medium Pressure	4 MPa (40 bar g/ 580 psi g); with plastic lined flange: max. 2.5 MPa (25 bar g/ 363 psi g)
Ambient Temperature	-20 °C... +60 °C (-4 °F... +140 °F)
Process Connection	1" BSP, 1" NPT Thread
Ingress Protection	IP 67
Electrical Connection	2x M20x1.5 cable glands + internal thread for 2x ½"NPT cable protective pipe, cable outer diameter: Ø 7 ... Ø 13 mm (0.3 ... 0.5 inch), wire cross section: max. 1.5 mm2 (AWG 15)
Electrical Protection	Class III
Housing Material	Plastic (PBT)
Sealing	FKM, On request: FFKM, EPR (EPDM)
Mass (head unit)	1.5 kg (3.3 lb)
EX-Approvals	ATEX (ia): II 1/2 G Ex ia IIB T6...T5 Ga/Gb ICEX (ia): EX ia IIB T6...T5 Ga/Gb

[1] Under reference conditions and stabilized temperature

Probe specifications*

Probe Type	Max. Measuring Range	Dead-zone[2]		Process Connection	ε_r min.
		Upper (t) /lower (b) $\varepsilon_r = 80$	Upper (t) /lower (b) $\varepsilon_r = 2.4$		
Mono cable Ø 4 mm (0.15 inch)	6 m (19.6 feet)	300 /20 mm (12 / 0.75 inch)	400 / 100 mm (16 / 4 inch)	1"	1.9
Mono rod Ø 8 mm (0.3 inch)	2 m (6.56 feet)	300 /20 mm (12 / 0.75 inch)	400 / 100 mm (16 / 4 inch)	1"	1.9

*The unmeasurable upper and lower part of the tank. The lower dead zone is extended by the length of the counterweight (cable versions only).

Technical Data of the Probes		
	Cable	Rod
Max. meas. dist.	24 m (80 feet)	3 m (10 feet)
Min. meas. Dist. ($\varepsilon_r = 80$ / $\varepsilon_r = 2.4$)	0.3 m / 0.4 m (1 feet / 1.3 feet)	
Minimal medium ε_r	1.9	
Sensing space around the probe	Ø 600 mm (2 feet)	
Process connection	1" BSP, 1" NPT	
Probe material	1.4401 (316)	1.4571 (316 Ti)
Probe nominal Ø	4 mm (0.15 inch)	8 mm (0.3 inch)
Mass	0.12 kg/m (0.08 lb/ft)	0.4 kg/m (0.25 lb/ft)
Counterweight dimensions	Ø 25x100 mm (1x4 inch)	-
Counterweight material	1.4571 (316 Ti)	-

[2] The unmeasurable upper and lower part of the tank, the lower dead-zone is extended with the length of the counterweight (cable version)

Installation

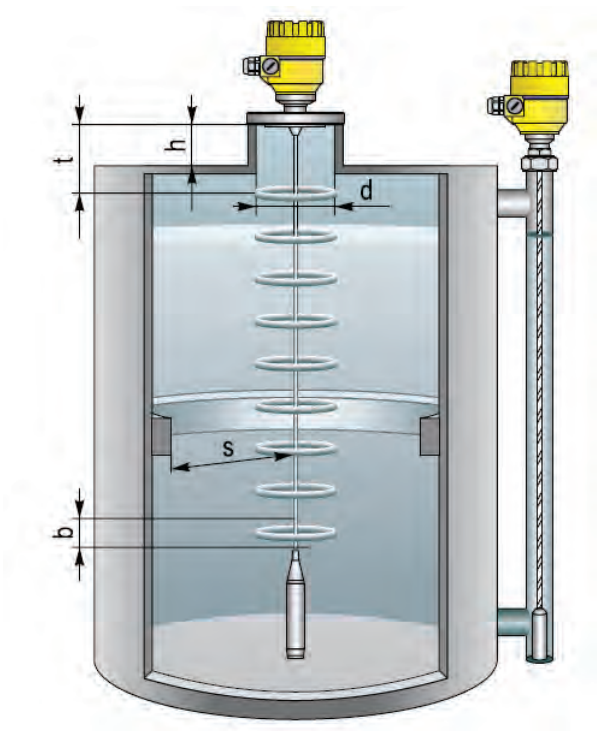

The probes can be removed from the head unit by the user.

s = minimum distance from the internal disturbing objects. Objects that are parallel to the probe do not disturb the measurement. s > 300 mm, h ≤ d, t ?, b?

Wiring

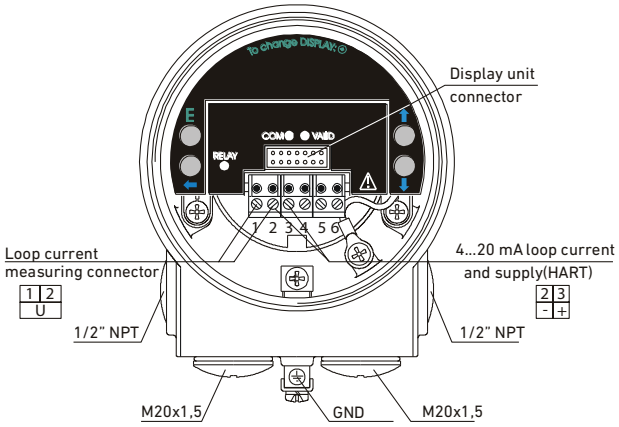

To Power Supply / HART Modem

Standard wiring & connection of HART-Modem

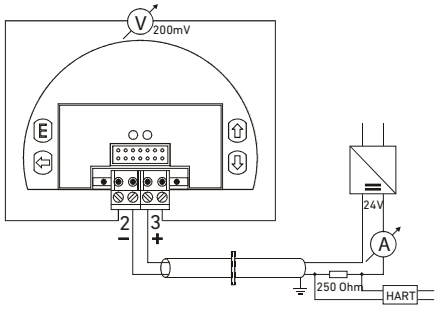

Wiring in an EX-environment

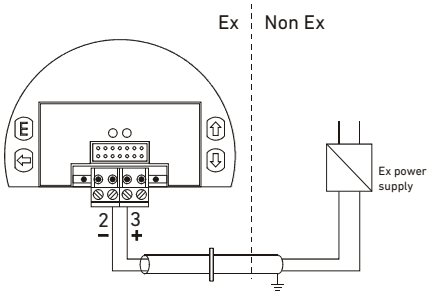

To iGo Converter - S³L / 4 to 20 mA

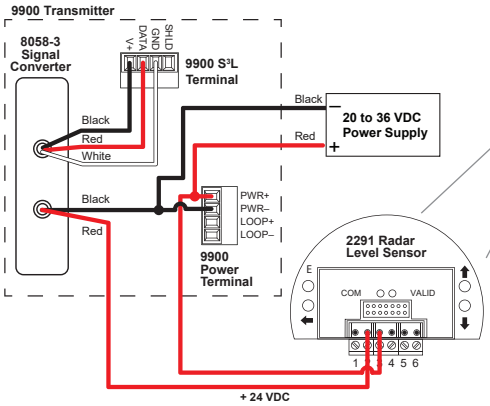

Pin No.	Assignment
1	mV Test, 10mV → 1mA
2	4-20 mA current + supply (HART) any polarity
3	4-20 mA current + supply (HART) any polarity
4	Not Assigned
5	Not Assigned
6	Not Assigned

Ordering Information

Mfr. Part No	Code	Description
2291-S-1DN1-6-R	**159 300 191**	LCD, PBT housing, 1" NPT, 6m cable Ø 4mm, SS316 Ti
2291-S-1DN1-2-D	**159 300 193**	LCD, PBT housing, 1" NPT, 2m rod Ø 8mm, SS316 Ti

Accessories

Mfr. Part No	Code	Description
	159 300 181	HART - USB Modem
3-8058-3	**159 000 966**	Wire-mount Signet i-Go signal (4 to 20 mA /S³L) converter to connect 2290 to 9900 Transmitter, 9950 Dual Channel, 8900 Multi-Parameter Controller. Single input
3-8058-2	**159 300 967**	DIN rail mount Signet i-Go (4-20mA/S³L) converter to connect 2290 to 9900 Transmitter, 8900 Multi-Parameter Controller. Two inputs
3-9900-1P	**159 001 695**	9900 SmartPro® Transmitter - Panel Mount
3-9900-1	**159 001 696**	9900 SmartPro® Transmitter - Field Mount
3-9950-1	**159 001 841**	9950 Base Unit – Two Channel Multi-Parameter Inputs, Two 4 to 20 mA Outputs, Panel Mount, DC Power
3-9950-2	**159 001 842**	9950 Base Unit – Two Channel Multi-Parameter Inputs, Two 4 to 20 mA Outputs, Panel Mount, AC or DC Power

2260 Ultrasonic Level Transmitters

The type 2260 is a rugged, high performance ultrasonic level measurement transmitter, having transducer and processing electronics and a display/programming unit incorporated in one single housing.

All type 2260 Level Transmitters are using established high end pulse echo transducers, which provide narrow beam angles and reliable measurement ranges up to a distance of 49 feet.

For small, stand alone tanks the transmitter provides a simple 2-wire 4 to 20 mA output, with additional relay contacts. It can be programmed using push buttons and the large, graphic display. For large and/or multiple tank applications versions with HART interface are recommended, communicating directly with a panel mount controller or PLC. The HART protocol can easily be used for programming these versions.

Features

- **2-wire compact transmitters**
- **Non-contact level metering**
- **Narrow 5° beam angle**
- **Level, volume and open channel flow**
- **Fully temperature compensated electronics**
- **Outstanding signal processing software providing highly accurate measuring results**
- **PP or PVDF sensor body provides best chemical resistance**
- **Quick-set menu for efficient installation**
- **Plug-in keypad and display**
- **SPDT relay for high / low alarm**
- **4 to 20 mA / and Optional HART**
- **Secondary lightning protection**
- **Intrinsically safe (Option)**
- **32-point linearization**

CE

Applications

- **Water Treatment**
- **Corrosive Industrial Waste Treatment**
- **Batching**
- **Filling**
- **Bulk Transfer**
- **Dirty Liquids**

Dimensions

2-wire level transmitters

2260-Y-YYY-4

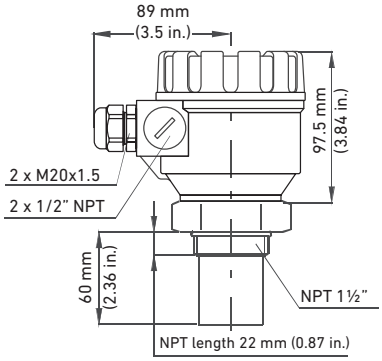

2260-Y-YYY-6

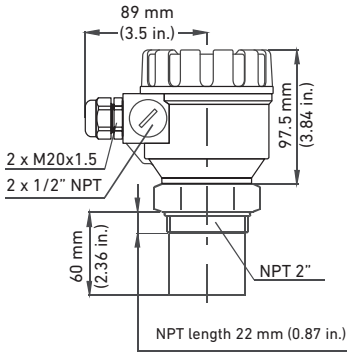

2260-Y-YYY-15

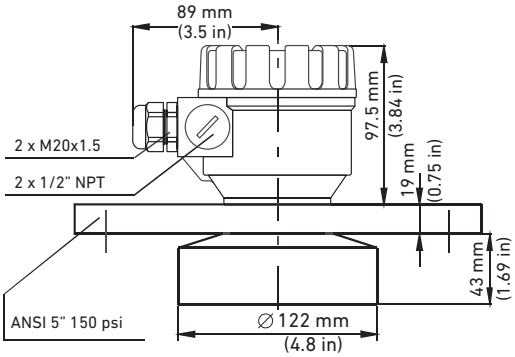

Specifications

General				
Type		2260-Y-YYY-4	2260-Y-YYY-6	2260-Y-YYY-15
Range		0.2 to 4 m / 0.65 to 13 ft	0.25 to 6 m / 0.82 to 20 ft	0.45 to 15 m / 1.5 to 49 ft
Measuring Frequency		80 kHz	80 kHz	40 kHz
Total Beam Angle		6°	5°	5°
Accuracy *		± (0.2 % of measured distance plus 0.05 % of range)		
Resolution		<2 m (6.6 ft): 1 mm (0.04 in.), 2 to 5 m (6.6 to 16.4 ft), 2 mm (0.08 in.), 5 to 10 m (16.4 to 32.8 ft): 5 mm (0.2 in.), >10 m (32.8 ft): 10 mm (0.39 in.)		
Environmental				
Process Temperature		-30 °C to +90 °C (-22 °F to + 194 °F)		
Ambient Temperature		-25 °C to +70 °C (-13 °F to + 158 °F)		
Process Pressure (absolute)		0.3 to 3 bar (4.35 psi - 43.5 psi)		
Enclosure				
Enclosure Material				
	Sensor Body	PP or PVDF		
	Housing	PBT		
Ingress Protection				
	Sensor	IP68		
	Housing	IP67		
Process Connection		1 1/2" NPT	2" NPT	5 inch flange
Sealing				
	PP sensor	EPR (EPDM)		
	PVDF sensor	FKM (Viton)		
Electrical				
Outputs		2-wire 4–20 mA , max. 600 Ohm; HART interface, Rt >/= 250 Ohm Ω		
Relay		(SPDT) 250V AC, 3A AC1		
Power Supply		12 to 36 V DC / 44 to 800 mW		
Power Consumption		DC 3.6 W, AC 4 VA		
Connection		2 x M20x1,5 plastic cable gland: Cable: Ø6 ... 12 mm and 2x 1/2" F-NPT		
Standards and Approvals				
General Approvals		CE, RoHS, Imported from Europe		

* Under optimal circumstances of reflection and stabilized transducer temperature

Display Unit

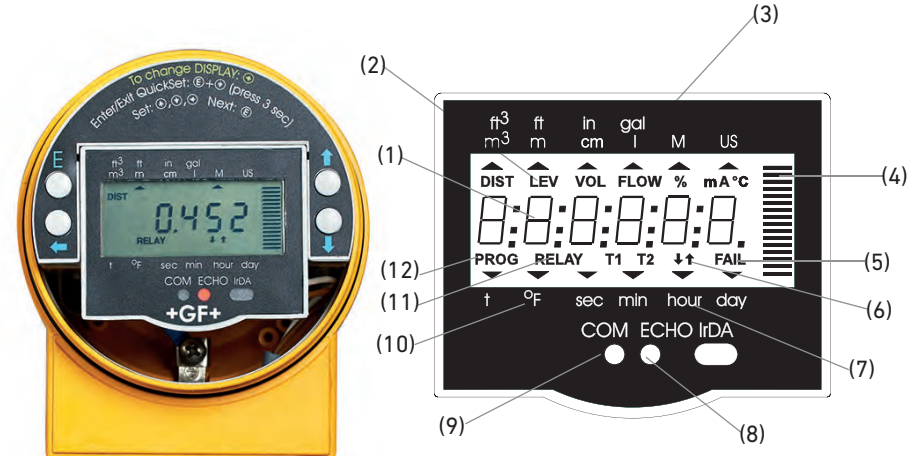

(1) Primary measured value
(2) Measurement mode
(3) Measurement unit / Standard
(4) Bar graph trend indication
(5) Measurement error indication
(6) Liquid movement direction
(7) Time unit
(8) Presence of valid echo
(9) HART communication
(10) Temperature unit
(11) Relay status indication
(12) Programming mode indication

2260 Transmitter Terminals

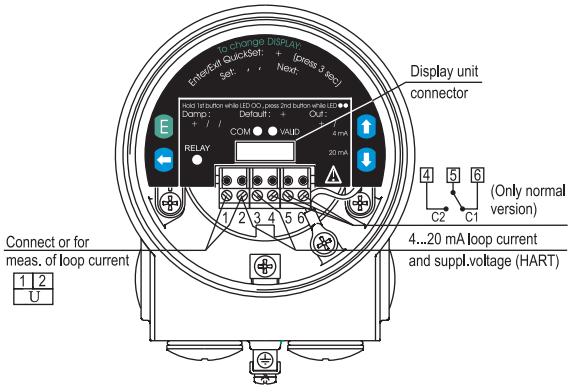

4 to 20 mA Loop Wiring

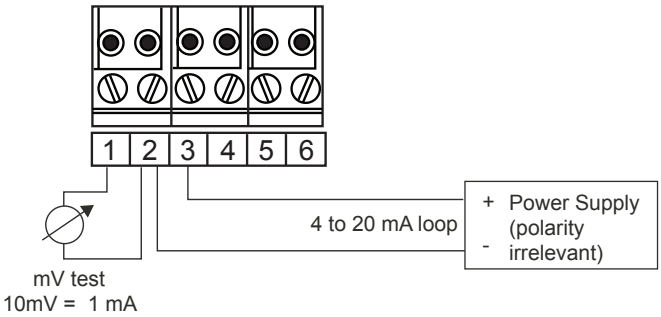

HART Interface Wiring

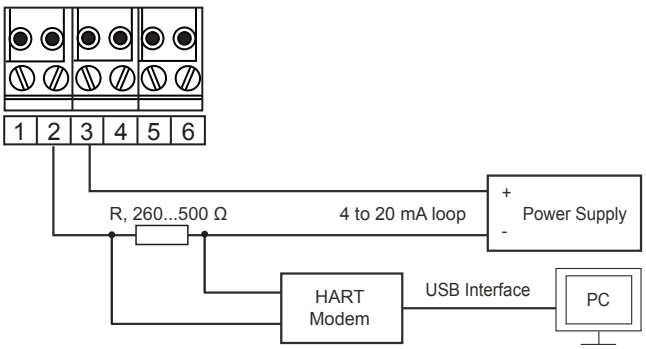

Wiring to 9900 Universal Transmitter

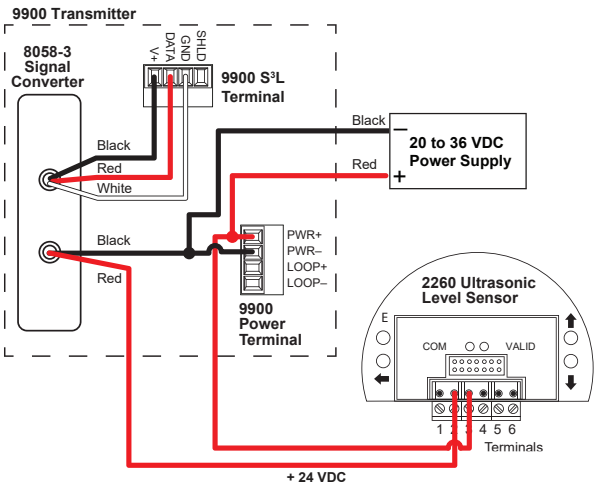

Relay Output Wiring

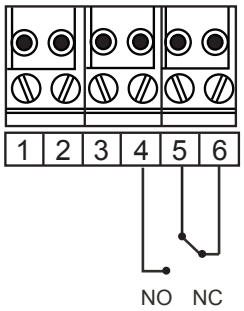

Pin No.	Assignment
1	mV Test, 10mV → 1mA
2	4-20 mA current + supply
3	4-20 mA current + supply Polarity irrelevant
4	Relay NO terminal
5	Relay common terminal
6	Relay NC terminal

Ordering Information (for all transmitters with integral display)

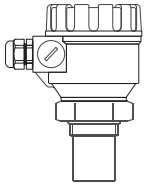

Mfr. Part No	Code	Description
2260-P-0DN-4	**159 300 120**	Range 4 m (13.1 ft), PP body, 4..20 mA 2-wire, NPT thread 1½"
2260-P-2DN-4	**159 300 121**	Range 4 m (13.1 ft), PP body, 4..20 mA 2-wire/relay/HART, NPT thread 1½"
2260-P-0DN-6	**159 300 122**	Range 6 m (19.7 ft), PP body, 4..20 mA 2-wire, NPT thread 2"
2260-P-2DN-6	**159 300 123**	Range 6 m (19.7 ft), PP body, 4..20 mA 2-wire/relay/HART, NPT thread 2"
2260-P-0DA-15	**159 300 124**	Range 15 m (49.2 ft), PP body, 4..20 mA 2-wire, ANSI Flange 5"
2260-P-2DA-15	**159 300 125**	Range 15 m (49.2 ft), PP body, 4..20 mA 2-wire/relay/HART, ANSI Flange 5"
2260-V-0DN-4	**159 300 131**	Range 4 m (13.1 ft), PVDF body, 4..20 mA 2-wire, NPT thread 1½"
2260-V-2DN-4	**159 300 132**	Range 4 m (13.1 ft), PVDF body, 4..20 mA 2-wire/relay/HART, NPT thread 1½"
2260-V-0DN-6	**159 300 133**	Range 6 m (19.7 ft), PVDF body, 4..20 mA 2-wire, NPT thread 2"
2260-V-2DN-6	**159 300 134**	Range 6 m (19.7 ft), PVDF body, 4..20 mA 2-wire/relay/HART, NPT thread 2"
2260-V-0DA-15	**159 300 135**	Range 15 m (49.2 ft), PVDF body, 4..20 mA 2-wire, ANSI Flange 5"
2260-V-2DA-15	**159 300 136**	Range 15 m (49.2 ft), PVDF body, 4..20 mA 2-wire/relay/HART, ANSI Flange 5"

Accessories

Code	Description
159 300 181	HART - USB Modem
159 300 182	HART - USB Modem, DIN Rail
159 300 183	HART - USB Modem, DIN Rail, ATEX
159 300 180	Display unit for type 2260 Transmitter
Special Order	8058-3 - 4 to 20 mA to (S^3L) signal converter

2260 Ultrasonic Level Transmitters with ATEX Approval

The type 2260 is a rugged, high performance ultrasonic level measurement transmitter, having transducer and processing electronics and a display/programming unit incorporated in one single housing.

All type 2260 Level Transmitters are using established high end pulse echo transducers, which provide narrow beam angles and reliable measurement ranges up to a distance of 49 feet.

For small, stand alone tanks the transmitter provides a simple 2-wire 4 to 20 mA output, with additional power relay contacts. It can be programmed using push buttons and the large, graphic display. For large and/or multiple tank applications versions with HART interface are recommended, communicating directly with a panel mount controller or PLC. The HART protocol can easily be used for programming these versions.

For hazardous areas the type 2260 Level Transmitters are available with explosion proof approvals.

Features

- **2-wire compact transmitters**
- **Non-contact level metering**
- **Narrow 5° beam angle**
- **Level, volume and open channel flow**
- **Fully temperature compensated electronics**
- **Outstanding signal processing software providing highly accurate measuring results**
- **PP or PVDF sensor body provides best chemical resistance**
- **Quick-set menu for efficient installation**
- **Easy wiring access**
- **Integral display for process values and easy programming**
- **4 to 20 mA / HART interface (Optional)**
- **Secondary lightning protection**
- **Intrinsically safe**

Applications

- **Hazardous Environments**
- **Water Treatment**
- **Corrosive Industrial Waste Treatment**
- **Batching**
- **Filling**
- **Bulk Transfer**
- **Dirty Liquids**

Dimensions

2-wire level transmitters

2260-Y-YYY-4

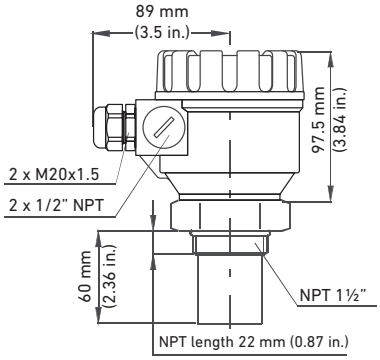

2260-Y-YYY-6

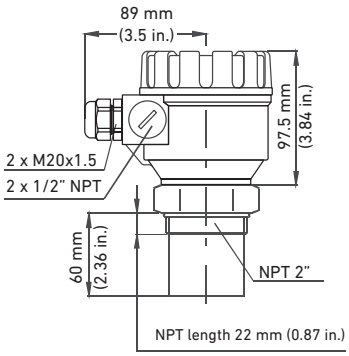

2260-Y-YYY-15

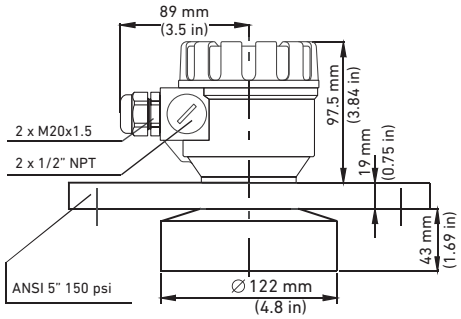

Specifications

General				
Type		2260-Y-YYYX-4	2260-Y-YYYX-6	2260-Y-YYYX-15
Range		0.2 to 4 m / 0.65 to 13 ft	0.25 to 6 m / 0.82 to 20 ft	0.45 to 15 m / 1.5 to 49 ft
Measuring Frequency		80 kHz	80 kHz	40 kHz
Total Beam Angle		6°	5°	5°
Accuracy *		± (0.2 % of measured distance plus 0.05 % of range)		
Resolution		<2 m (6.6 ft): 1 mm (0.04 in.), 2 to 5 m (6.6 to 16.4 ft), 2 mm (0.08 in.), 5 to 10 m (16.4 to 32.8 ft): 5 mm (0.2 in.), >10 m (32.8 ft): 10 mm (0.39 in.)		
Environmental				
Process Temperature				
	PP Sensor	-20 °C to +70 °C (-4 °F to 158 °F)		
	PVDF Sensor	-20 °C to +80 °C (-4 °F to 176 °F)		
Ambient Temperature		-20 °C to +60 °C (-4 °F to 140 °F)		
Process Pressure (absolute)		0.3 to 3 bar (4.35 psi - 43.5 psi)		
Enclosure				
Enclosure Material				
	Sensor Body	PP or PVDF		
	Housing	PBT		
Ingress Protection				
	Sensor	IP 68, NEMA 6P		
	Housing	IP 67, NEMA 6P		
Process Connection		1 1/2" NPT	2" NPT	5 inch flange
Sealing				
	PP Sensor	EPR (EPDM)		
	PVDF Sensor	FKM (Viton)		
Electrical				
Outputs		2- wire 4–20 mA , HART interface, Rt >/= 250 Ω		
Power Supply		12 to 30 V DC, Note: Ex-devices must be powered by EEx ia power supplies		
Power Supply Loading		U_o < 30 V, I_o < 140 mA, P_o < 1 W, R_t max = (Us - 12 V) / 0,02 A		
Intrinsically Safety Data		C_i </= 15 nF, L_i </= 200 µH, U_i </= 30V, I_i </= 140 mA, P_i </= 1 W		
Connection		2 x M20x1,5 metal cable gland: Cable: Ø7 ... 13 mm and 2x 1/2" F-NPT		
Standards and Approvals				
General Approvals		CE, RoHS, Imported from Europe		
ATEX Approval		ATEX II 1 G EEx ia IIB T6, IP68, NEMA 6P		

* Under optimal circumstances of reflection and stabilized transducer temperature

Display Unit

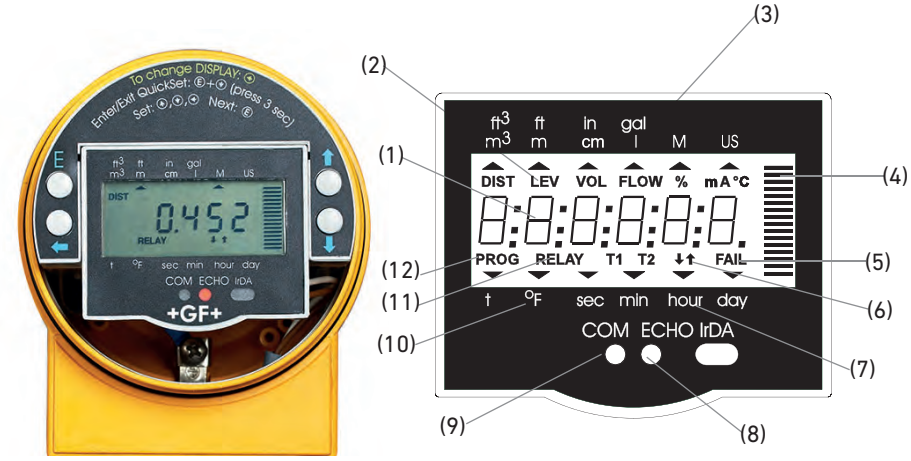

(1) Primary measured value
(2) Measurement mode
(3) Measurement unit / Standard
(4) Bar graph trend indication
(5) Measurement error indication
(6) Liquid movement direction
(7) Time unit
(8) Presence of valid echo
(9) HART communication
(10) Temperature unit
(11) Relay status indication
(12) Programming mode indication

2260 Transmitter Terminals

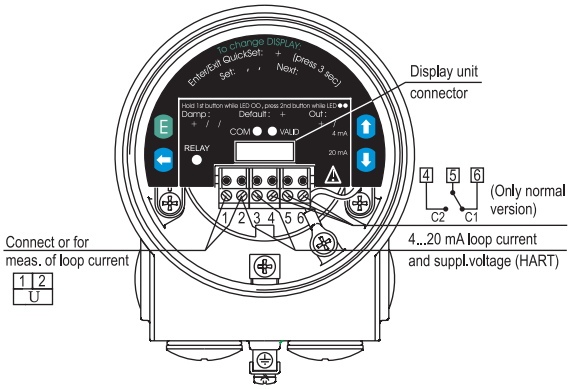

4 to 20 mA Loop Wiring

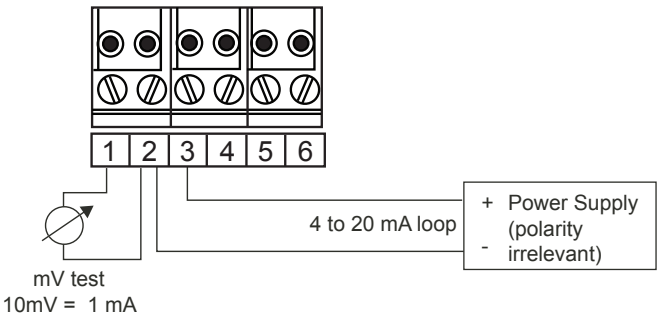

HART Interface Wiring

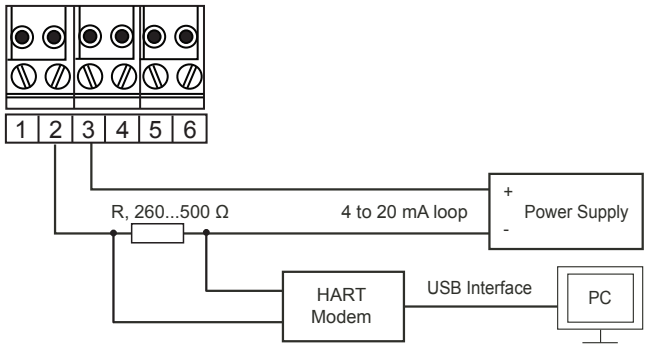

Wiring to 9900 Universal Transmitter

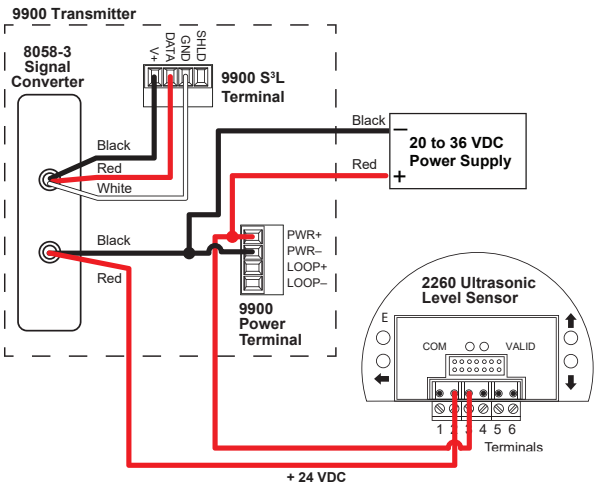

Pin No.	Assignment
1	mV Test, 10mV → 1mA
2	4-20 mA current + supply
3	4-20 mA current + supply Polarity irrelevant
4	Relay NO terminal
5	Relay common terminal
6	Relay NC terminal

Ordering Information (for all transmitters with integral display)

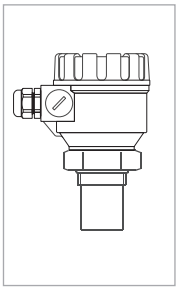

Mfr. Part No	Code	Description
Versions with NPT thread / ANSI flange		
2260-V-1DNX-4	**159 300 142**	Range 4 m, PVDF body, 4..20 mA 2-wire / HART, ATEX, NPT thread 1½"
2260-V-1DNX-6	**159 300 143**	Range 6 m, PVDF body, 4..20 mA 2-wire / HART, ATEX, NPT thread 2"
2260-V-1DAX-15	**159 300 144**	Range 15 m, PVDF body, 4..20 mA 2-wire / HART, ATEX, ANSI Flange 5"

Accessories

Code	Description
159 300 181	HART - USB Modem
159 300 182	HART - USB Modem, DIN Rail
159 300 183	HART - USB Modem, DIN Rail, ATEX
159 300 180	Replacement display unit for type 2260 Transmitter
Special Order	8058-3 - 4 to 20 mA to (S^3L) signal converter

2270 Ultrasonic Level Sensor

The type 2270 is a rugged, high performance ultrasonic level measurement sensor, having transducer and processing electronics incorporated in one single housing. It provides all the sophisticated echo detection features of the well accepted 2260 Ultrasonic Level Transmitters.

For single and multiple tank applications 2-wire sensors are recommended using either HART protocol or 4 to 20 mA for the direct communication with a panel mount controller or a PLC.

Either for liquid level measurement in sumps or tanks, for tank contents measurement, or open channel flow measurement, the 2270 Level Sensors provide the answer. Sensing ranges up to 6 m (19.7 ft) are available. PP and PVDF sensor bodies provide best chemical resistance in applications where concentrated chemical shall be detected.

Features

- **2 wire compact sensor**
- **Compatible with 9900 transmitter (optional signal converter)**
- **Non-contact level measuring**
- **Narrow 5° beam angle**
- **Level, volume and open channel flow**
- **Compact housing**
- **32 points of linearization**
- **Fully temperature compensated electronics**
- **Outstanding signal processing software providing highly accurate measuring results**
- **PP or PVDF sensor body provides best chemical resistance**
- **Secondary lightning protection**
- **4 to 20 mA / HART interface**

CE

Applications

- **Water Treatment**
- **Corrosive Industrial Waste Treatment**
- **Batching**
- **Filling**
- **Bulk Transfer**
- **Dirty liquids**

Specifications (Type 2270-X-XX-4)

General		
Range		0.2 to 4 m / 0.65 to 13 ft
Total Beam Angle		6°
Measuring Frequency		80 kHz
Accuracy*		± (0.2 % of measured distance plus 0.05 % of range)
Resolution		<2 m (6.6 ft): 1 mm (0.04 in.), 2 to 4 m (6.6 to 13.1 ft): 2 mm (0.08 in.)
Environmental		
Process Temperature		–30 °C to +90 °C (–22 °F to +194 °F)
Ambient Temperature		–30 °C to +80 °C (–22 °F to +176 °F)
Process Pressure (absolute)		0.5 to 3 bar (7.25 psi to 43.5 psi)
Enclosure		
Enclosure and Sensor Material		PP or PVDF
Cable Material		Cable sealing: EPR (EPDM), cable isolation: PVC
Ingress Protection		IP 68 / NEMA 6P
Process Connection		1½" NPT
Sealing		
	PP Sensor	EPR (EPDM)
	PVDF Sensor	FKM (Viton)
Electrical		
Outputs		2-wire 4–20 mA , max.600 Ohm; HART interface, Rt >/= 250 Ohm
Power Supply		DC 12 to 36 V
Power Consumption		max. 720 mW, overload protected
Connecting		6 x 0,5 mm^2 shielded cable; Ø 6 mm x 5 m (30 m max.)
Electric Shock Protection		Class III, low voltage
Standards and Approvals		
General Approvals		CE, Imported from Europe

* Under optimal circumstances of reflection and stabilized transducer temperature

Dimensions

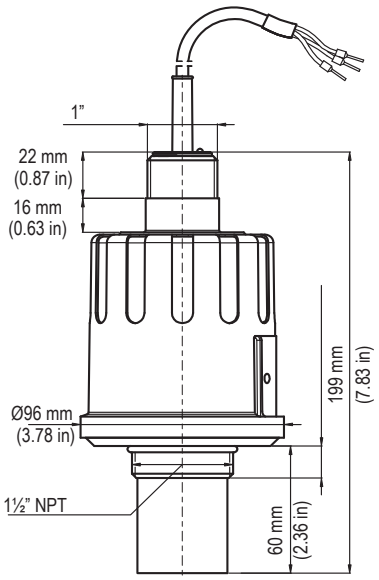

Specifications (Type 2270-X-XX-6)

General		
Range		0.25 to 6 m / 0.82 to 20 ft
Total Beam Angle		5°
Measuring Frequency		80 kHz
Accuracy*		± (0.2 % of measured distance plus 0.05 % of range)
Resolution		<2 m (6.6 ft): 1 mm (0.04 in.); 2 to 5 m (6.6 to 16.4 ft): 2 mm (0.08 in.); 6 m (19.7): 5 mm (0.2 in.)
Environmental		
Process Temperature		–30 °C to +90 °C (–22 °F to +194 °F)
Ambient Temperature		–30 °C to +80 °C (–22 °F to +176 °F)
Process Pressure (absolute)		0.5 to 3 bar (7.25 psi to 43.5 psi)
Enclosure		
Enclosure and Sensor Material		PP or PVDF
Cable Material		Cable sealing: EPR (EPDM), cable isolation: PVC
Ingress Protection		IP 68 / NEMA 6P
Process Connection		2" NPT
Sealing		
	PP Sensor	EPR (EPDM)
	PVDF Sensor	FKM (Viton)
Electrical		
Outputs		2-wire 4–20 mA , max.600 Ohm; HART interface, Rt >/= 250 Ohm
Power Supply		DC 12 to 36 V
Power Consumption		max. 720 mW, overload protected
Connecting		6 x 0,5 mm^2 shielded cable; Ø 6 mm x 5 m (30 m max.)
Electric Shock Protection		Class III, low voltage
Standards and Approvals		
General Approvals		CE, Imported from Europe

* Under optimal circumstances of reflection and stabilized transducer temperature

Dimensions

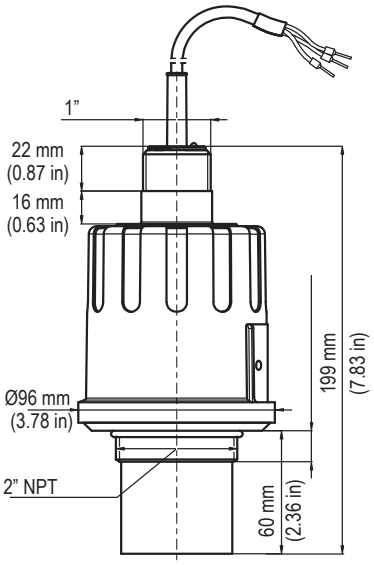

4 to 20 mA Loop Wiring

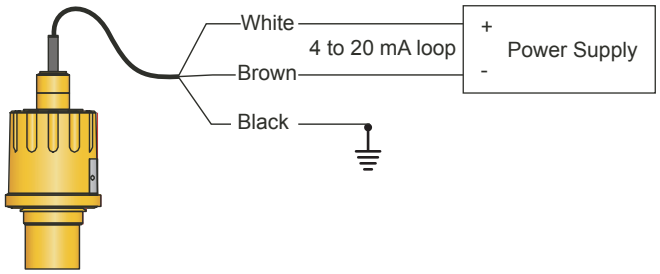

HART Interface Wiring

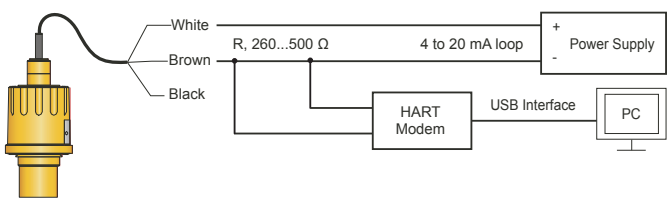

Wiring to 9900 Universal Transmitter

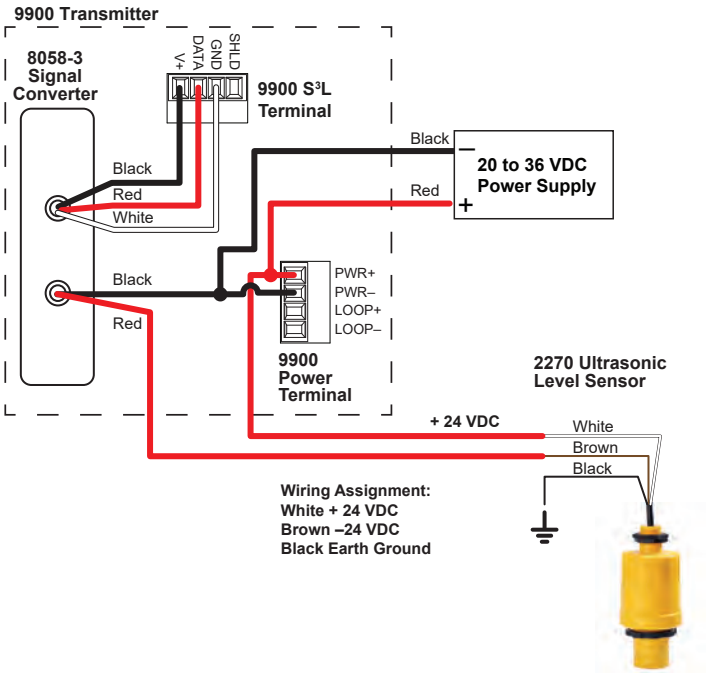

Ordering Information

Mfr. Part No.	Code	Description
Versions with NPT thread		
2270-P-1N-4	**159 300 169**	Range 4 m, PP body, 4 to 20 mA 2-wire/HART, NPT thread 1½"
2270-P-1N-6	**159 300 170**	Range 6 m, PP body, 4 to 20 mA 2-wire/HART, NPT thread 2"
2270-V-1N-4	**159 300 176**	Range 4 m, PVDF body, 4 to 20 mA 2-wire/HART, NPT thread 1½"
2270-V-1N-6	**159 300 177**	Range 6 m, PVDF body, 4 to 20 mA 2-wire/HART, NPT thread 5"

Accessories

Code	Description
159 300 181	HART - USB Modem
159 300 182	HART - USB Modem, DIN Rail
159 300 183	HART - USB Modem, DIN Rail, ATEX
Special Order	8058-3 - 4 to 20 mA to (S³L) signal converter

Signet i-GO® 3-8058-3 Signal Converter

Level >>

3-8058-3

The Signet i-Go 8058-3 Signal Converter converts a 4 to 20 mA signal to a Digital (S^3L) signal. This allows any third party device with a 4 to 20 mA output, to connect to the 9900 Transmitter (only accepts a Digital (S^3L) input).

The 9900 Transmitter's 4 to 20 mA option when used with the 8058-3, allows information from the 4 to 20 mA output of a device, to be visually displayed on the 9900.
The user can also customize the units and the description on the 9900 display. For example, when using the converter with the 2270 Level Sensor, the 9900 Transmitter can be configured to display signal and units of the level sensor output.

The Signet i-Go 8058-3 Signal Converter is designed to fit in the Relay Module slot of the 9900-1P Panel Mount Transmitters. The 8058-3 can be purchased individually or as a complete package, Signet 3-9900-1P-IGO, that includes the 9900-1P Transmitter.

If using the 8058-3 Signal Converter together with a Relay Module, the 8058-3 can be attached to the 9900 Transmitter using a hook and loop strip (supplied). The Relay Module adds two dry contact relays, SPDT. The relays and/or open collector in the 9900 can be used to indicate alarm conditions, including low alarm, high alarm, and proportional pulse.

SAP Material Number 150 301 005

3-8058-X

Signal Converter only	
3	Single input converter; 4 to 20 mA output converted to a digital (S^3L) output, for use with the 9900-1P only

3-9900-1P-IGO

9900 Panel Mount with 3-8058-3 i-GO® connector

3-9900.399-X

Rear Enclosure		Signet Accessory Reference
1	with hinged cover	159 001 834
2	with flat cover	159 001 835

3-8058-3 shown installed in 9900 transmitter

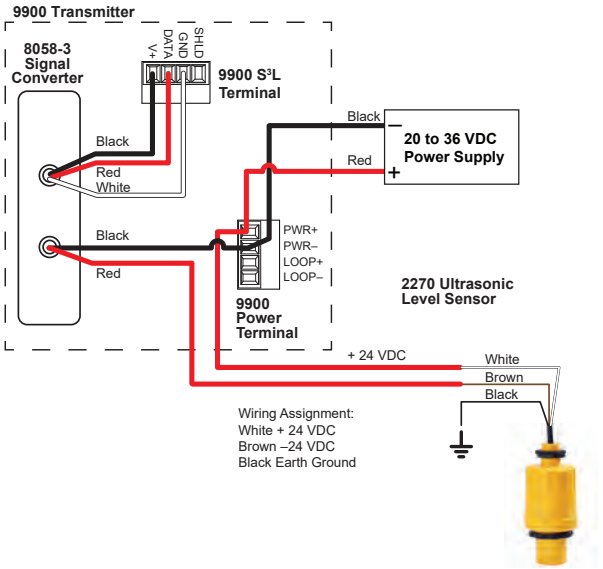

2270 Ultrasonic Level Sensor

Refer to instruction sheet for wiring to other third party devices.

General			
Input	4 to 20 mA current loop, passive (external power required)		
Input Range	3.6 to 22.1 mA		
Output	Digital (S^3L) output		
Accuracy	± 32 µA @ 25 °C		
Electrical			
Max. Voltage	35 VDC		
Max. Current	40 mA		
Isolation	Up to 48 VAC/DC		
Voltage Drop	5 VDC max.		
	Reverse polarity protected		
Max. Recommended Cable Extensions			
	Loop in	305 m (1000 ft)	
Environmental			
Operating Ambient Temperature	-10 °C to 55 °C	14 °F to 131 °F	
Storage Temperature	-20 °C to 85 °C	-4 °F to 185 °F	
Relative Humidity	3-8058-3: 0 to 100%, condensing		
Shipping Weight			
	3-8058-3	0.09 kg	0.20 lb
Standards and Approvals			
	CE, FCC		
	RoHS compliant, China RoHS, Made in USA from US and Imported Parts		

Special order products may not meet all of the specifications of the standard sensor assemblies.

2280 Vibration Level Forks

Vibrating fork level switches are suitable for level detection of liquids or granular, powdered solids. Mounted on tanks filling / emptying can be controlled using these devices just as well they can generate fail-safe alarms providing overfill- or dry run protection.

The operation principle is based on the electronic circuit exciting the fork probe making it vibrate. As the medium reaches and covers the fork its vibration changes. The electronics senses the change of vibration and gives output signal after a selected delay.

Features

- **Maintenance free vibrating principle**
- **Independent of the liquid conductivity, dielectric constant, viscosity, pressure and temperature**
- **Selectable sensitivity**
- **Relay or electronic output**
- **Temperatures up to 130 degree**
- **ATEX and WHG approvals**
- **IP 67, 65/68 protection, NEMA 6P**

CE, WHG, ATEX

Applications

- **Potable Water**
- **River Water**
- **Cooling Water**
- **Demineralized Water**
- **Water/Glycol Solutions**
- **Chemicals**

Dimensions

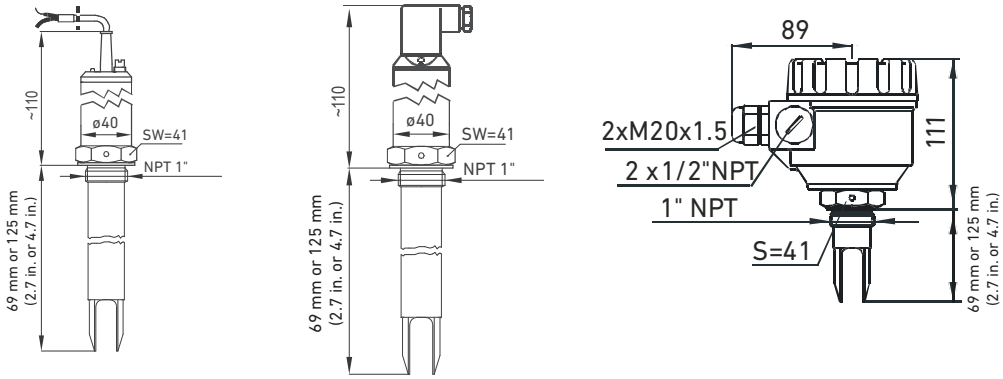

Specifications

General			
Type	2280-Y-YYYC-Y	2280-Y-YYYO-Y	2280-Y-YYYT-Y
Probe Length	69 mm or 125 mm (2.7 in. or 4.9 in.)		
Operation Mode Indicator	Bi-color LED		
Environmental			
Process Temperature	–40 °C ... +130 °C (-40 °F... +266 °F)		
Ambient Temperature	-40 °C...+70 °C (-40 °F...+158 °F) / -30 °C...+70 °C (-22 °F...+158 °F)		
Process Pressure (absolute)	(40 bar) 580 psi		
Min Medium Density Max Medium Viscosity	≥ 0.7 kg/dm^3 ≤10'000 mm^2/s (cSt)		
Enclosure			
Sensor	Stainless Steel DIN 1.4571		
Housing	Stainless Steel DIN 1.4571		PBT
Ingress Protection	IP 67, NEMA 6P		
Process Connection	1 ” NPT		
Electrical			
Switching Function	2-wire AC; 3-wire PNP-NPN		1 SPDT relay
Output Voltage / -Current	AC 9mA free, 14 mA immersed 3-wire max. 350mA, <4.5V (on)		250V AC, 8A AC1
Power Supply	12...55 V DC or 20		20 ... 255 V AC and 20 ... 60 V DC
Response Time	≤ 0.5 s		
Power Consumption	0.6 W		AC: 1.2 ... 17 VA; DC: <3 W
Connection	Cable PVC 5x0.5mm^2, 3m	DIN Connector	Terminal
Protection	Class III		Class I
Standards and Approvals			
ATEX Approval	ATEX II 1 G Ex ia IIC T6, IP68		
General Approvals	CE, RoHS, Imported from Europe		

Wiring

DIN Connector 3 Wire DC Version:

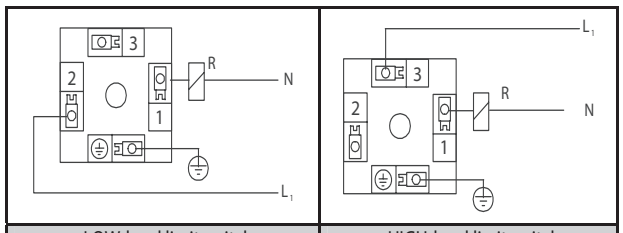

LOW-level limit switch	HIGH-level limit switch

PBT Enclosure Version:

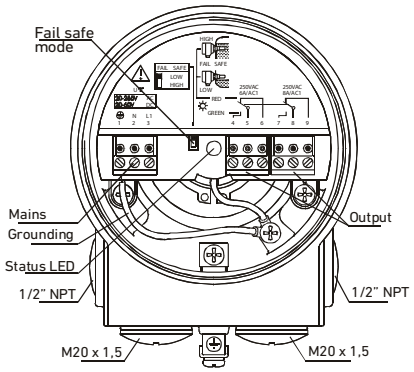

DC Cable Version 3 Wire DC Version:

PNP-wiring

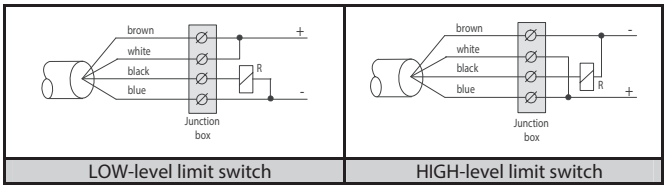

LOW-level limit switch	HIGH-level limit switch

NPN-wiring

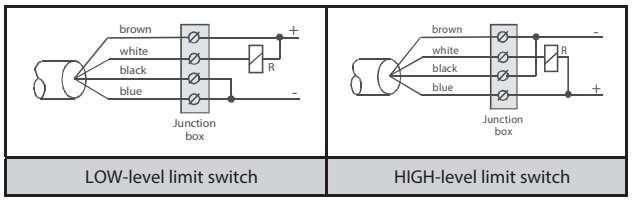

LOW-level limit switch	HIGH-level limit switch

DIN Connector 2 Wire AC Version:

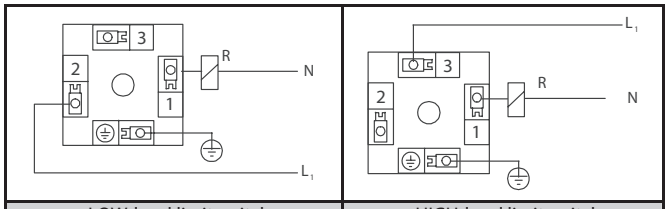

LOW-level limit switch	HIGH-level limit switch

AC Cable Version 2 Wire AC Version:

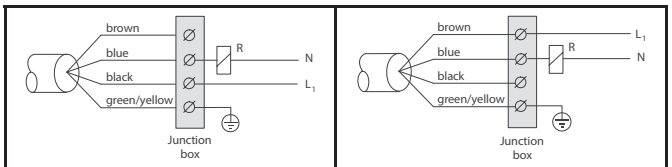

LOW-level limit switch	HIGH-level limit switch

Ordering Information

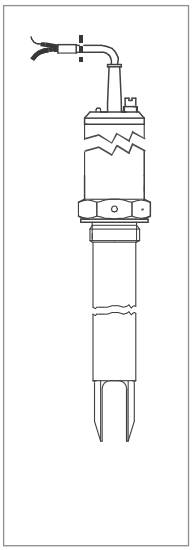

Mfr. Part No.	Code	Description
2280-S-5WNO-1	**159 300 220**	Length 69 mm (2.72 in.), Stainless Steel, Output 3-wire PNP-NPN, DIN connector, NPT thread 1"
2280-S-5WNC-1	**159 300 221**	Length 69 mm (2.72 in.), Stainless Steel, Output 3-wire PNP-NPN, cable, NPT thread 1"
2280-S-5WNO-2	**159 300 222**	Length 125 mm (4.92 in.), Stainless Steel, Output 3-wire PNP-NPN, DIN connector, NPT thread 1"
2280-S-5WNC-2	**159 300 223**	Length 125 mm (4.92 in.), Stainless Steel, Output 3-wire PNP-NPN, cable, NPT thread 1"
2280-S-5XWNO-1	**159 300 230**	Length 69 mm (2.72 in.), Stainless Steel, Output 2-wire AC, DIN connector, NPT thread 1", ATEX
2280-S-5XWNC-1	**159 300 231**	Length 69 mm (2.72 in.), Stainless Steel, Output 2-wire AC, cable, NPT 1", thread, ATEX
2280-S-5XWNO-2	**159 300 232**	Length 125 mm (4.92 in.), Stainless Steel, Output 2-wire AC, DIN connector, NPT thread 1", ATEX
2280-S-5XWNC-2	**159 300 233**	Length 125 mm (4.92 in.), Stainless Steel, Output 2-wire AC, cable, NPT thread 1", ATEX
2280-S-5WNT-1	**159 300 242**	Length 69 mm (2.72 in.), Stainless Steel, PBT enclosure, 1 SPDT relay, NPT thread 1"
2280-S-5WNT-2	**159 300 243**	Length 125 mm (4.92 in.), Stainless Steel, PBT enclosure, 1 SPDT relay, NPT thread 1"

2281 Multipoint Switch

The Multipoint Switch is based on the conductivity principle and can be applied to liquids with conductivity higher than 10 µS/cm.

The probes have to be placed into the tank for level detection. The probe length should be in accordance with the level to be detected. Filling liquid in the tank will change the electrical conductivity between the reference probe and the outer probes. The established connection will be converted and activate a relay providing the output.

Features

- **Easy on site probe length configuration**
- **Fast installation due to 2 to 4 individual switching points integrated in one sensor**
- **Up to 4 relays for pump and valve control**
- **Adjustable sensitivity**
- **Adjustable delay time**

CE

Applications

- **Potable Water**
- **Cooling Water**
- **Chemicals**
- **Pump Control**

Dimensions

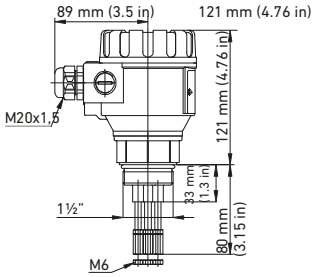

Multiprobe Sockets:
2281-S-BT-2; 2 electrodes
2281-S-BT-3; 3 electrodes
2281-S-BT-4; 4 electrodes

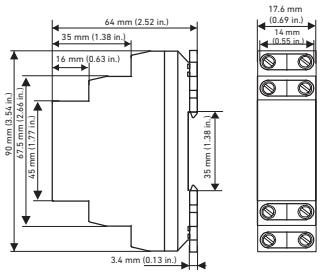

Conductive Level Control Switch Type 2281-1-Relay; 1 SPDT Relay

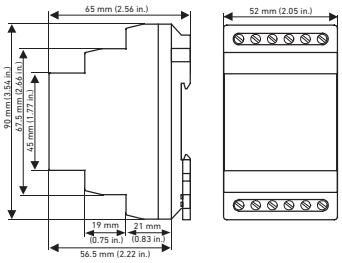

Conductive Level Control Switch Type 2281-2-Relay; 2 SPDT Relay

Specifications

General			
Type	2281-Y-YY-Y	2281-1-Relay	2281-2-Relay
Probes	2, 3, 4		
Environmental			
Process Temperature	max. +80 °C (176 °F)		
Ambient Temperature	-20 °C...+50 °C (-4 °F...+122 °F)		
Process Pressure (absolute)	0.1 MPa (1 bar) 14.5 psi		
Enclosure			
Enclosure Material	PBT		
Process Connection Material	PP		
Probe Socket Material	Stainless Steel 1.4571		
Ingress Protection	IP65, NEMA 4	IP20, NEMA 1	
Process Connection	1½ in.		
Probes			
Material	Stainless Steel 1.4571		
Standards Lengths Available	0.5 m (19.69 in.), 1.0 m (39.37 in.), 1.5 m (59.06 in.) (72 in., 108 in. on request)		
Please contact GF for special lengths up to 3 m			
Probe Separator			
Material	PP		
Electrical			
Probe Voltage		3.5 V AC	5 V AC
Probe Current		< 0.2 mA AC	< 1mA AC
Response		max. 400 ms	
Delay		Adjustable: 0.5...10 s	
Relay Output		1x SPDT	2x SPDT
Switching Voltage		250 V AC1, 24 V DC	
Switching Current		8 A AC1	16 A AC1
Switching Power		2500 VA AC1, 240 W DC	4000 VA AC1, 384 W DC
Power Supply		24 V...240 V AC / DC	24 V AC / DC
Mechanical Connection		DIN EN 60715 rail	
Electrical Connection		Class II	Class III
Standards and Approvals			
General Approvals	CE, RoHS		

Accessories

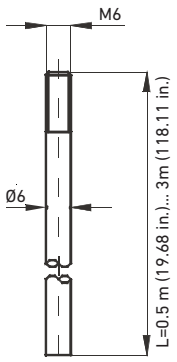

Probe dimension

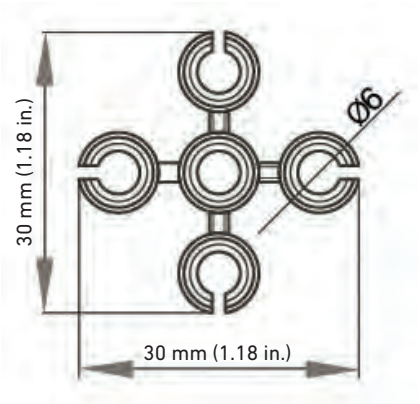

Probe separator 2281-5 spacer, to be used every 0.5 m (19.69 in.)

Wiring

1 SPDT Relay: Type 2281-1-Relay
Part No.: 159 300 258

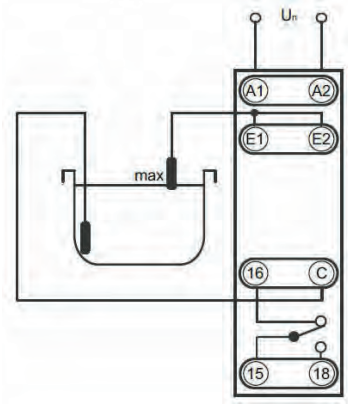

A1, A2 - power supply
C - reference probe
E1 - upper level probe
E2 - bottom level probe
S - shielding
15, 16, 18 - 1. relay output
25, 26, 28 - 2. relay output

Single Level Monitoring

2 SPDT Relay: Type 2281-2-Relay
Part No.: 159 300 259

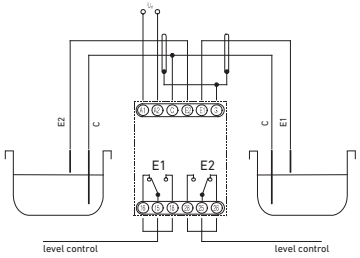

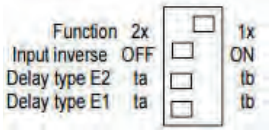

Device Settings

To detect two independent levels in one or two separate tanks

One Tank

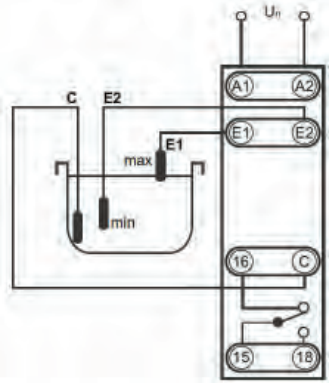

Level Control

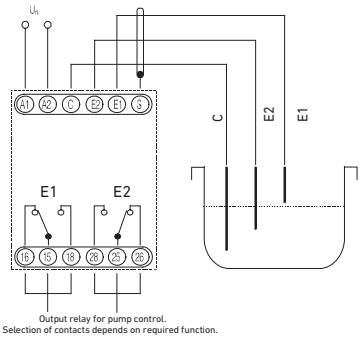

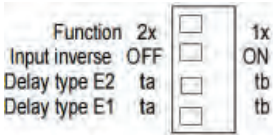

Device Settings

Level Control - two levels in one tank

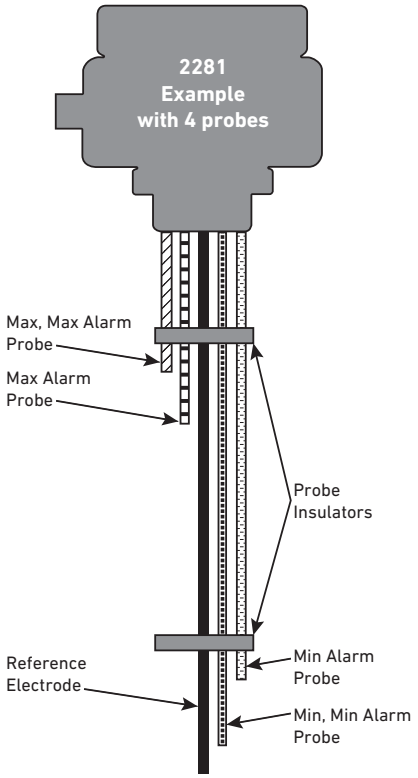

How to Order

The 2281 can be utilized for alarming 2-4 level set-points, any combination of LO or HI levels. The 2281 housing must always remain out of the fluid being measured.

Step 1 - Select Multiprobe Enclosure based upon the quantity of desired set-points 1 - 4.

Step 2 - Select one stainless steel rod to serve as the reference electrodes. Choose either a 19.69 in., 39.37 in., or 59.06 in., the length should be longer than any of the alarm probes. Note: The rod can be cut shorter onsite with a hack saw for a precise fit.

Step 3 - Select one stainless steel rod for each set-point (up to four rods). For each length choose either a 19.69 in., 39.37 in., or 59.06 in. Note: The rod can be cut shorter onsite with a hack saw for a precise dimension.

Step 4 - Select probe insulator, a minimum of one is required. It's suggested to add one more for every additional 20 in. of assembly length (maximum 3).

Step 5 - Select the amount of set-point relays to match the amount of alarm set-points. Choose either 2 or 1 and 2=3, or 2 and 2=4.

Ordering Information

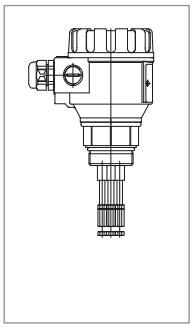

	Mfr. Part No.	Code	Description
Step 1	2281-S-BT-2	**159 300 250**	Multiprobe enclosure, 2 probes + reference probe, PBT enclosure
	2281-S-BT-3	**159 300 251**	Multiprobe enclosure, 3 probes + reference probe, PBT enclosure
	2281-S-BT-4	**159 300 252**	Multiprobe enclosure, 4 probes + reference probe, PBT enclosure
Step 2 &3	2281-E-205	**159 300 253**	Stainless steel electrode, 0.5 m (19.69 in.)
	2281-E-210	**159 300 254**	Stainless steel electrode, 1.0 m (39.37 in.)
	2281-E-215	**159 300 255**	Stainless steel electrode, 1.5 m (59.06 in.)
Step 4	2281-5-Spacer	**159 300 257**	Probe separator for conductive level switch
Step 5	2281-1-Relay	**159 300 258**	Conductive level control switch, 1 SPDT relay, 24 - 240 V AC/DC
	2281-2-Relay	**159 300 259**	Conductive level control switch, 2 SPDT relay, 24V AC/DC
Options			enclosure NEMA 4A, fiberglass with SS hardware, 7.69 in. L x 7.69 in. W x 6.38 in. D
	6205-0002	**159 000 858**	1 meter length DIN Rail
	6205-0003	**159 000 859**	End clip for DIN Rail

Call for more details (800)854-4090

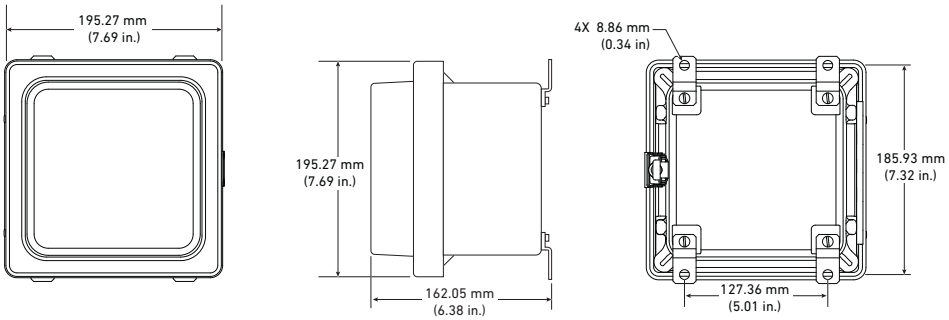

2282 Guided Float Switch

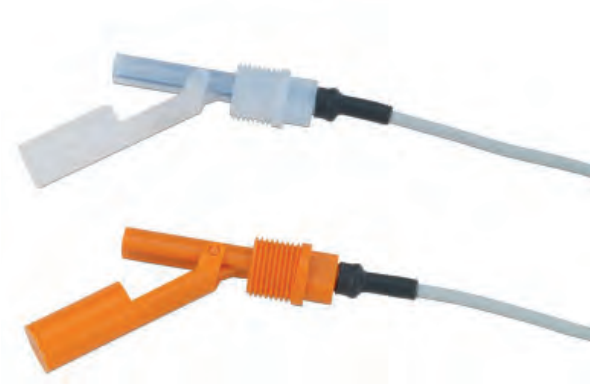

The Guided Float Switch is designed for economical control of liquids in tanks. The switch is remarkable for its maintenance-free compact design and reed contacts with high switch capacity. It can easily be installed in water applications as well as in chemical applications.

The encapsulated reed contact is operated by the magnet. The switching function (N/O contact/N/C contact) is determined by the installation position. The switching function is determined by simply rotating the switch through 180 °. (High level vs. low level).

Features

- **Optimized chemical compatibility**
- **Very compact design**
- **PP and PVDF version available**
- **For small tanks**

CE

Applications

- **Cooling Water**
- **Demineralized Water**
- **Water/Glycol Solutions**
- **Chemicals**

Dimensions

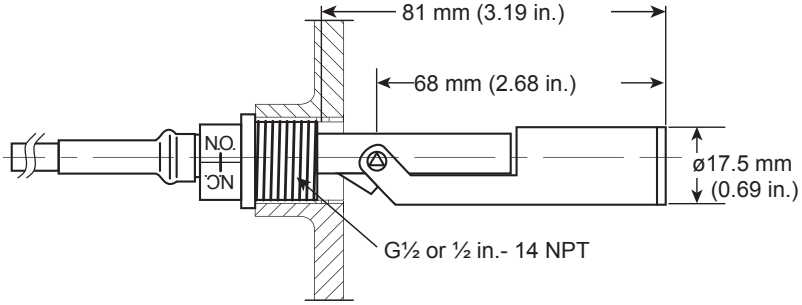

Specifications

General	
Type	2282-Y-YY-Y
Environmental	
Max. Temperature	-65 °C ... +100 °C (-85 °F... +212 °F)
Max. Pressure	10 bar (145 psi)
Medium Density	>0.6 g/cm3
Enclosure	
Enclosure/Float Material	PP or PVDF
Cable Material	PVC
Ingress Protection	IP 68, NEMA 6P
Process Connection	1/2" BSP, NPT
Electrical	
Outputs	Reed contact
Contact Resistance	max. 80 mΩ
Max. Voltage Rating	230 V AC/DC
Max. Current Rating	2 A / 40 VA
Cable Type	AWG 20, 2-Core, PVC, 1m
Contact Components	N/O or N/C depending on the installation
Standard and Approvals	
General Approvals	CE, RoHS, Imported from Europe

Ordering Information

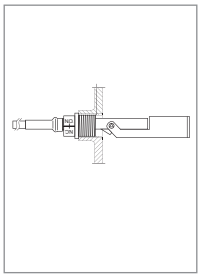

Mfr. Part No.	Code	Description
Versions with NPT thread		
2282-P-6CN	**159 300 265**	PP body, cable, 1/2" NPT
2282-V-6CN	**159 300 267**	PVDF body, cable, 1/2" NPT

2284 Ultrasonic Gap Switch

The Ultrasonic Gap Switch consists of Polyphenylene Sulphide (PPS) and is high corrosion resistant in most liquids. The gap switch is designed for high or low level alarm in different tank applications as well as pump control. However, if there is a liquid present, the signal will be transmitted across the gap and the integral electronics will switch the output circuitry to signal the presence of a liquid.

The Ultrasonic gap switch can be mounted at any angle in a tank using a 3/4" or 1" thread available in NPT thread forms.

Features

- **Relay output**
- **Corrosion resistant PPS body**
- **1" and 3/4" threaded mounting**
- **Small in-tank dimensions**
- **Compact sensor for narrow spaces**
- **Self contained full plastic body**
- **No moving parts**

CE

Applications

- **Cooling Water**
- **Demineralised Water**
- **Water/Glycol Solutions**
- **Chemicals**
- **Pump Control/Pump Protection (Dry Run)**

Specifications

General	
Type	2284-Y-YYY
Repeatability	±2 mm (0.08 in.)
Environmental	
Process Temperature	-20 °C to +70 °C (-4 °F to +158 °F)
Ambient Temperature	-20 °C to +70 °C (-4 °F to +158 °F)
Process Pressure (absolute)	72.5 psi (5 bar)
Maximum Viscosity	5000 cSt at 20 C° (68 °F)
Enclosure	
Enclosure Material	PPS
Cable Material	PVC
Probe Socket Material	Stainless Steel 1.4571
Ingress Protection	IP 66/IP68 (3 m) / NEMA 6P (10 ft)
Process Connection	3/4" or 1" NPT
Electrical	
Power Supply	18 to 30 VDC / AC
Power Consumption	≥ 25 mA
Max. Voltage Rating	30 VDC / AC
Max. Current Rating	1 A at 30 V residual 0.25 A at 30V inductive
Response Time	50 ms wet-dry, 0.5s dry-wet
Cable Type	5 core 7/0.2mm, 3m
Switching Function	SPCO relay No/Nc
Standards and Approvals	
General Approvals	CE, RoHS

Dimensions

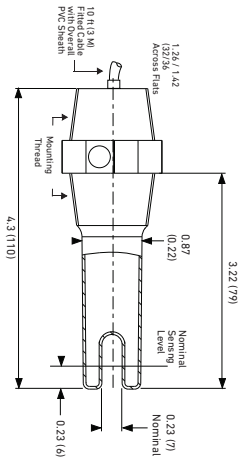

Wiring

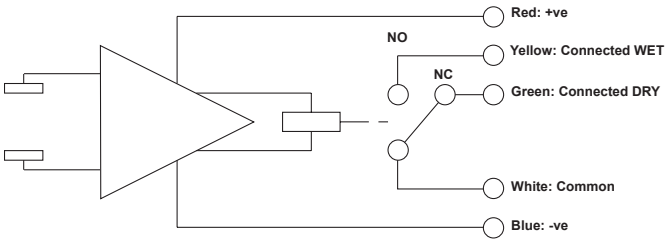

Ordering Information

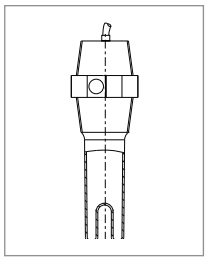

Mfr. Part No.	Code	Description
2284-Q-4BC	**159 300 270**	Body PPS, 3/4", cable 3 m
2284-Q-4NC	**159 300 272**	Body PPS, NPT 1", cable 3 m

2285 Float Switch

The 2285 Level Float Switch is suitable for level switching of various liquids, sewage in shafts, tanks, basins or cisterns. The double-chambered float is made of injection moulded tough polypropylene that ensures good waterproof protection.

The contacting microswitch is incorporated in the float. The cable of the level switch is absolutely waterproof and PVC insulated. Different control tasks such as liquid level monitoring and pump control can be realized. It is a mercury-free contact and suitable for level switching of drinking water, raw water or polluted liquids with low solid content.

The level switching is done when the contact reaches the ±45° switching angle. The switching differential of the level switch is adjustable by the position of the counterweight on the cable. The level switches should be arranged appropriately in case of multi-level switching tasks to avoid undesired tangling of the cables.

Features

- **Hermetically molded, double chamber**
- **Mercury free operated micro switch**
- **Use for drinking and wastewater**

CE

Applications

- **Tap Water**
- **River Water**
- **Sump Shafts**

Specifications

	Float Switch	Counterweight
General		
Type	2285-P-6C-Y	
Cable Length	5m (16.5 ft), 10m (33 ft), 20m (66 ft)	
Switching Angle	± 45°	
Mass	250 g (0.55 lb), without cable	
Environmental		
Medium Temperature	0 °C to +50 °C (+32 °F to +122 °F)	
Medium Density	min. 0,8g/cm3	
Medium Pressure	(1 bar g - 14.5 psi g)	
Enclosure		
Enclosure Material	PP	PP
Cable Material	Neoprene	
Ingress Protection	IP 68, NEMA 6P	IP 68, NEMA 6P
Electrical		
Microswitch	10(4) A, 250 V AC, AC1	
Cable	9 mm (0.35 inch) / 3 x 1 mm2 (AWG 17)	
Standards & Approvals		
General Approvals	CE, RoHS, Imported from Europe	

Dimensions

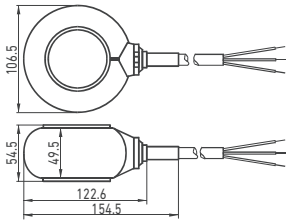

Wiring

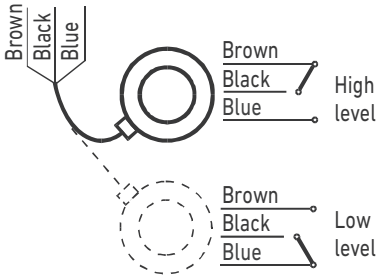

Ordering Information

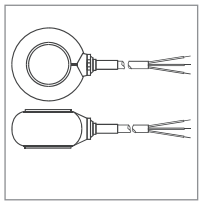

Mfr. Part No.	Code	Description
2285-P-6C-5	**159 300 280**	Level float, PP, cable neoprene 5 m, microswitch NO/NC
2285-P-6C-10	**159 300 281**	Level float, PP, cable neoprene 10 m, microswitch NO/NC
2285-P-6C-20	**159 300 282**	Level float, PP, cable neoprene 20 m, microswitch NO/NC
2285-P-weight	**159 300 289**	Counterweight for 2285 float **(Sold Separately)**

Signet 2350 Temperature Sensor

Blind Transmitter or Digital (S^3L) Sensor

The Signet 2350 Temperature Sensor has a one piece injection molded PVDF body that is ideal for use in high purity applications. It also outlasts metal sensors in aggressive liquids and eliminates the need for costly custom thermowells. These sensors are available with a proprietary digital (S^3L) output or field-scaleable 4 to 20 mA output.

Dual threaded ends (¾ in. NPT) allow submersion in process vessels, or in-line installation with conduit connection. An integral adapter kit (sold separately) may be used to create a compact assembly with field mount versions of the Signet 9900 Transmitter.

Features

- **4 to 20 mA or digital (S^3L) output**
- **Standard ¾ in. NPT process connection**
- **One-piece injection molded PVDF body**
- **PT1000 platinum RTD in extended tip for quick response**
- **Easy installation**
- **Threaded for in-line or submersible installation**

Applications

- **Plating Bath Temperature Control**
- **Heat Exchange Monitor**
- **R.O. and D.I. System Monitor**
- **Hot/Cold Mixing System Monitor**
- **Data Acquisition**
- **Cooling Loops**
- **Effluent Monitoring**
- **HVAC**
- **Chemical Processing**

Specifications

General			
Output		Digital (S^3L) output or 4 to 20 mA	
Accuracy		±0.5 °C (±0.9 °F)	
Response Time		10 secs.	
Repeatability		±0.1 °C (±0.2 °F)	
Resolution		0.01 °C (0.02 °F)	
Sensing-End Connection		¾ in. NPT male thread	
Cable-End Connection		¾ in. NPT male thread	
Wetted Materials			
Sensor Housing		PVDF	
Electrical			
Power Requirements			
	Digital (S^3L)	5 to 6.5 VDC ±10%, <1 .5 mA	
	4 to 20 mA	12 to 24 VDC ±10%, regulated	
Cable Length		4.6 m (15 ft) cable length can also be extended up to 121 m (400 ft)	
Cable Type		PVC jacketed, 3-conductor with shield 22 AWG, Blk/Red/White/Shld	
Digital (S^3L) Output		Serial ASCII, TTL Level 9600 bps.	
		Reverse polarity and short circuit protected.	
4 to 20 mA Output			
Accuracy		±32 µA	
Resolution		<5 µA	
Span		4 to 20 mA factory calibrated 0 °C to 100 °C (32 °F to 212 °F)	
Max. Loop Impedance		50 Ω @ 12 V	
		325 Ω @ 18 V	
		600 Ω @ 24 V	
Update Rate		<100 ms	
Max. Temperature/Pressure Rating			
Operating Temperature			
In-line Mounting		-10 °C @ 16 bar to 100 °C @ 7.5 bar	14 °F @ 232 psi to 212 °F @ 108 psi
Submersible Mounting		-10 °C @ 16 bar to 85 °C @ 7.5 bar	14 °F @ 232 psi to 185 °F @ 108 psi
Storage Temperature		-55 °C to 100 °C	-67 °F to 212 °F
Relative Humidity		0 to 95% non-condensing	
Shipping Weight			
		0.22 kg	0.5 lb
Standards and Approvals			
		CE, FCC	
		RoHS compliant, China RoHS, Made in USA from US and Imported Parts	
		Manufactured under ISO 9001 for Quality and ISO 14001 for Environmental Management and OHSAS 18001 for Occupational Health and Safety	

See Temperature and Pressure graphs for more information.

Dimensions

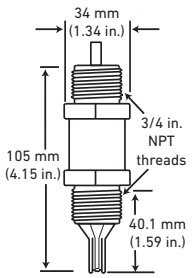

2350-X

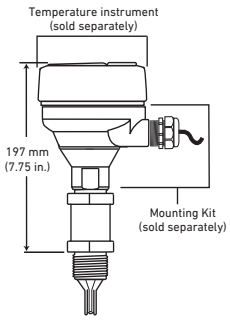

Signet Model D100 DeviceLink

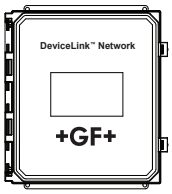

System Overview

In-Line Installation

Panel Mount	Pipe, Tank, Wall Mount	Field (Integral) Mount	4 to 20 mA Output	Automation System
Signet Instruments 8900 9900 9950	Signet Instruments 9900 with Rear Enclosure	Signet Instruments 9900 with 3-8052 Integral Mount Kit	Customer Supplied Chart Recorder, Programmable Logic Controller or Programmable Automation Controller	0486 Profibus Concentrator and Customer Supplied Programmable Logic Controller or Programmable Automation Controller

Signet 2350 Temperature Sensor

In-Line Installation - Fittings Customer Supplied

All sold separately

Submersible Installation

Panel, Pipe, Tank, Wall Mount	4 to 20 mA Output	Automation System
Signet Instruments* 8900 9900 9950 with 3-8050 Universal Mount Kit or 3-8052 Integral Mount Kit and Pipe extension or conduit with 3/4 in. FNPT threads	Customer Supplied Chart Recorder, Programmable Logic Controller or Programmable Automation Controller	0486 Profibus Concentrator and Customer Supplied Programmable Logic Controller or Programmable Automation Controller

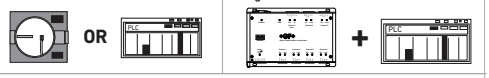

Signet 2350 Temperature Sensor

All sold separately

*For tank or wall mount installations, user must use the Universal Adapter Kit (3-8050)

Ordering Notes

3-2350-X sensor can be mounted with an instrument in an integral configuration by doing the following:

1) Order Integral adapter kit 3-8052 (sold separately) to connect the instrument (sold separately) directly onto the sensor.
2) Order an instrument (sold separately). The following instrument part numbers are compatible with the 2350 for integral mounting: 3-9900-1.

Application Tips

- For submersible sensor mounting, always use a water tight conduit and a cable gland to prevent moisture intrusion.
- To extend the cable, use a 3-conductor shielded cable and junction box.
- Sensors with extended cables available, contact Special Order products.

Temperature/Pressure Graphs

Note:

The pressure/temperature graphs are specifically for the Signet sensor. During system design the specifications of all components must be considered. In the case of a metal piping system, a plastic sensor will reduce the system specification. When using a PVDF sensor in a PVC piping system, the fitting will reduce the system specification.

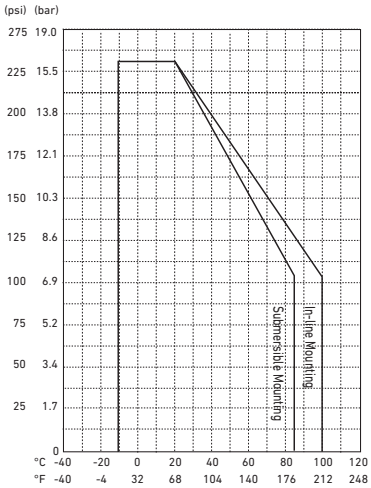

Ordering Information

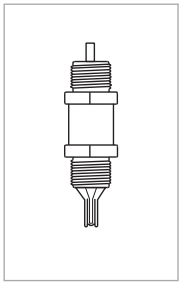

Mfr. Part No.	Code	Output and Cable Length
Temperature Sensor, with 4.6 m (15 ft) cable		
3-2350-1	**159 000 021**	Digital (S^3L)
3-2350-3	**159 000 920**	Current (4 to 20 mA)
3-2350-3-1	**159 001 882**	Current (4 to 20 mA) with disabled span adjustment through red wire

Accessories and Replacement Parts

Mfr. Part No.	Code	Description
5523-0322	**159 000 761**	Sensor cable (per ft), 3 cond. plus shield, 22 AWG
3-8052	**159 000 188**	¾ in. Integral mounting kit
3-8052-1	**159 000 755**	¾ in. NPT mount junction box with one liquid tight connector and cap with junction terminals
3-9000.392-1	**159 000 839**	Liquid tight connector kit, NPT (1 connector)
3-9000.392-2	**159 000 841**	Liquid tight connector kit, PG 13.5 (1 connector)
3-0252	**159 001 808**	Configuration Tool
	Contact Factory	Custom cable length available

150 300 300
Universal Sensor Adapter
(See page 232)

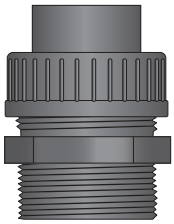

Please refer to Wiring, Installation, and Accessories sections for more information.

Signet 2450 Pressure Sensors

1/2 in. union mount

Blind transmitter or digital (S^3L) sensor

The 2450 Pressure Sensor has a one-piece injection molded PVDF body and ceramic diaphragm for superior compatibility in corrosive liquids. Three pressure versions allow for optimal resolution matched to your sensing needs. Solid state circuitry eliminates drift (no internal potentiometers).

These sensors are available with a proprietary digital (S^3L) output, or field-scaleable 4 to 20 mA output. Dual-threaded ends allow submersion in process vessels or in-line installation with conduit connection, Integral adapters (sold separately) may be used to create a compact assembly with a field mount style of the Signet 9900 Transmitter.

Features

- **Test certificate included**
- **4 to 20 mA or digital (S^3L) output**
- **½ in. male union process connection**
- **One-piece injection molded PVDF body**
- **Flush ceramic diaphragm**
- **Easy installation**
- **Choice of three pressure ranges**
- **Pressure or level measurement**
- **NEMA 4X/IP65 rated when using the 3-8052-1**

Applications

- **Level or Depth Sensing**
- **HVAC**
- **Scrubber Systems**
- **Pump Protection**
- **Water Management**
- **Irrigation Systems**
- **Wastewater**
- **Chemical Processing**
- **Pressure Regulation/Monitoring**

Specifications

General		
Output	Digital (S^3L) or 4 to 20 mA	
Accuracy		
For All Pressure Ranges	±1% of full scale @ 25 °C	
Response Time	<100 ms	
Sensing-End Connection	½ in. union male thread (requires end connector and union nut)	
	(See installation section for end connector and nut recommendation)	
Cable-end Connection	¾ in. NPT male thread	
Wetted Materials		
Sensor Housing	PVDF	
Diaphragm	Ceramic	
Diaphragm Seal and Union O-ring	FKM	
Electrical		
Power Requirements		
Digital (S^3L)	5 to 6.5 VDC <1.5 mA	
4 to 20 mA	12 to 24 VDC ±10%, regulated	
Cable Length	4.6 m	15 ft.
Cable Type	3 cond. + shield, 22 AWG, PVC jacketed, Blk/Red/White/Shld	
Digital (S^3L) Output	Serial ASCII, TTL level 9600 bps.	
	Reverse polarity and short circuit protected.	
4 to 20 mA Output		
Accuracy	±32 µA	
Resolution	<5 µA	
Span	4 to 20 mA factory calibrated to operating ranges shown below	
Max. Loop Impedance	100 Ω @ 12 V	
	325 Ω @ 18 V	
	600 Ω @ 24 V	
Max. Temperature/Pressure Rating		
Operating Temperature	-15 ˚C to 85 ˚C	5 ˚F to 185 ˚F
Storage Temperature	-20 ˚C to 100 ˚C	-4 ˚F to 212 ˚F
Operating Pressure		
-XU	0 to 0.7 bar	0 to 10 psig
-XL	0 to 3.4 bar	0 to 50 psig
-XH	0 to 17 bar	0 to 250 psig
Vacuum Range		
-XU	-0.1 to 0.7	-1.5 to 10 psi
-XL	-0.41 to 3.4 bar	-6 to 50 psi
-XH	-0.96 to 17.2 bar	-14.6 to 250 psi
Proof Pressure		
-XU:	1.4 bar	20 psig
-XL	5.2 bar	75 psig
-XH	20.7 bar	300 psig
Shipping Weight		
	0.150 kg	0.33 lb
Standards and Approvals		
	CE, FCC	
	RoHS compliant, China RoHS, Made in USA from US and Imported Parts	
	Manufactured under ISO 9001 for Quality and ISO 14001 for Environmental Management and OHSAS 18001 for Occupational Health and Safety	

See Temperature and Pressure graphs for more information.

Dimensions

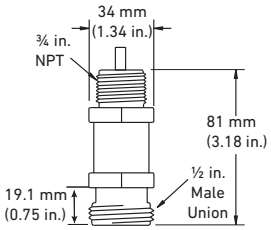

3-2450-3X, -7X

Pressure Instrument
Sold separately

3-8052
Integral
Mount Kit
Sold separately

3-2450-XX
Pressure
Sensor

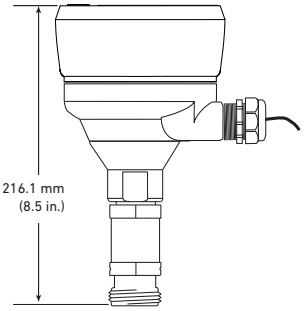

With 3-9900-1

Signet Model D100 DeviceLink

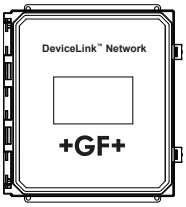

System Overview

Panel Mount	Pipe, Tank, Wall Mount	Field (Integral) Mount	4 to 20 mA Output	Automation System
Signet Instruments 8900 9900 9950	Signet Instruments 9900 with Rear Enclosure 9900 with 3-8050 Universal Mount Kit	Signet Instruments 9900 with 3-8052 Integral Mount Kit	Customer Supplied Chart Recorder, Programmable Logic Controller or Programmable Automation Controller	0486 Profibus Concentrator and Customer Supplied Programmable Logic Controller or Programmable Automation Controller

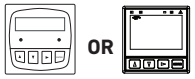

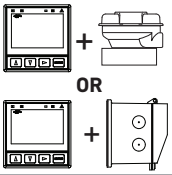

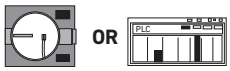

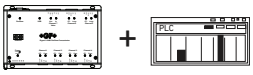

Signet 2450 Pressure Sensor*

All sold separately

In-Line Installation - Fittings customer supplied

* The capillary tube located at the rear of the sensor must be exposed to the atmosphere.

Temperature/Pressure Graphs

Note:
The pressure/temperature graphs are specifically for the Signet sensor. During system design the specifications of all components must be considered. In the case of a metal piping system, a plastic sensor will reduce the system specification. When using a PVDF sensor in a PVC piping system, the fitting will reduce the system specification.

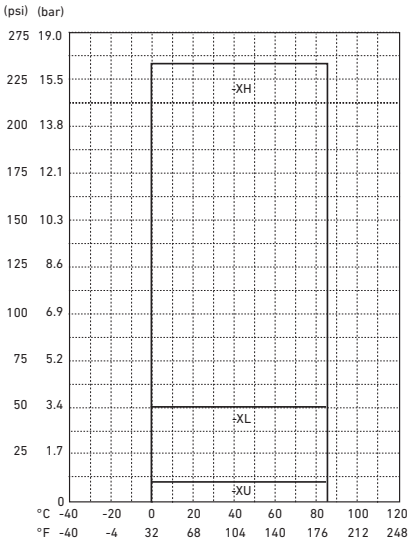

Application Tips

- These sensors can also be used for tank level measurements.
- Place a ball valve between tank and 2450 sensor for maintenance ease.
- Back end of sensor must be exposed to atmospheric pressure.
- To extend the cable, use a 3-conductor shielded cable & junction box.
- For submersible sensor mounting, always use the 3-2250 Submersible Hydrostatic Pressure Sensor.
- EPR (EPDM) available contact special order

Ordering Notes

Any sensor can be mounted with an instrument in an integral configuration by doing the following:

1. It is advised to protect the capillary tube located on the back of the sensor with the NEMA 4X/IP65 rated 3-8052-1.
2. Order Integral adapter kit PN 3-8052 or NEMA 4X/IP65 rated 3-8052-1 (sold separately) to connect the instrument (sold separately) directly on to the sensor.
3. Order an instrument (sold separately).
   The following instrument part numbers are compatible with the 2450 for integral mounting: 3-9900-1.
4. Union mount version installs into pipe with end connector and union nut. See Installation and Wiring section for more information on parts required.

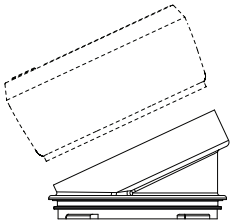

3-9900-396
Angle adjustment adapter kit
(optional accessory)

Ordering Information

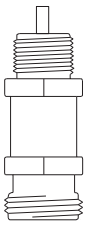

Mfr. Part No.	Code	Output
Pressure Sensor with 4.6 m (15 ft) cable, ½ in. male union process connection		
Operating Pressure Range 0 to 10 psi		
3-2450-3U	**159 000 683**	Digital (S^3L)
3-2450-7U	**159 000 906**	Current (4 to 20 mA)
3-2450-7U-1	**159 001 883**	Current (4 to 20 mA), with disabled span adjustment through red wire
Operating Pressure Range 0 to 50 psi		
3-2450-3L	**159 000 682**	Digital (S^3L)
3-2450-7L	**159 000 908**	Current (4 to 20 mA)
3-2450-7L-1	**159 001 884**	Current (4 to 20 mA), with disabled span adjustment through red wire
Operating Pressure Range 0 to 250 psi		
3-2450-3H	**159 000 681**	Digital (S^3L)
3-2450-7H	**159 000 910**	Current (4 to 20 mA)
3-2450-7H-1	**159 001 885**	Current (4 to 20 mA), with disabled span adjustment through red wire

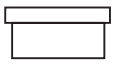

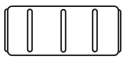

Material	Code	Description
Union Matrix for Pressure Sensor 3-2450 ½ in. Union Connection		
End connector		
PVC	**721 500 106**	Union end metric socket
PVC	**721 602 006**	Union end IPS socket
PVC	**721 602 656**	Union end NPT thread
CPVC	**723 602 006**	Union end socket
PP-H	**727 508 506**	Union end butt
PP-H	**727 500 106**	Union end threaded
PP-H	**157 203 603**	Union end threaded NPT
PP-N	**728 608 506**	Union end butt
PVDF	**735 608 606**	Union end butt
PVDF	**735 600 106**	Union end socket
PVDF	**198 203 611**	Union end threaded
Nuts		
PVC	**721 890 006**	PVC nut
CPVC	**723 690 006**	CPVC nut
PVDF	**735 690 406**	PVDF nut
PP	**727 890 406**	Poly Pro nut

Accessories and Replacement Parts

Mfr. Part No.	Code	Description
5523-0322	**159 000 761**	Sensor cable (per ft), 3 cond. plus shield, 22 AWG
3-8052	**159 000 188**	¾ in. Integral mounting kit
3-8052-1	**159 000 755**	¾ in. NPT mount junction box with one liquid tight connector and cap with junction terminals (NEMA 4X/IP65 rated)
3-9000.392-1	**159 000 839**	Liquid tight connector kit, NPT (1 connector)
3-9000.392-2	**159 000 841**	Liquid tight connector kit, PG 13.5 (1 connector)
3-9900.396	**159 001 701**	Angle Adjustment Adapter Kit (for Field Mounting)
3-0252	**159 001 808**	Configuration Tool
Contact Specials	**Special Order**	1/2" union to a 3/4" NPT adapter is available

Signet Temperature, Pressure

	D100	9950
Description	DeviceLink™ Network	Multi-Channel (2 Channel), Multi-Parameter Controller
Modular Components		Yes
Max. Sensor Inputs	Up to 12 channels, programmable for Digital (S^3L), frequency or 4 to 20 mA input, depending on package selected and two Modbus via 9900 or 9950.	2 frequency or S^3L inputs
Mounting Options	Panel	Panel
Display	7 in. LCD touch screen or web browser, PC, smartphone, or tablet	LCD, Dot matrix
Analog Output Types	Up to 4 passive 4 to 20 mA loop outputs	(2) Passive 4 to 20 mA Outputs, Standard Up to six via optional modules (optional relay module)
Max. Relays	Up to 4 Dry-Contact, programmable relay	4 Dry-Contact Relays or 2 Mechanical and 2 Solid State Relays (optional relay module)
Derived Measurements	N/A	6 Derived Measurements Sum, Delta (Difference), Ratio, % Passage% Reject, % Recovery
Languages	English	English, French, German, Spanish and Simplified Chinese
Ambient Temperature (°C) **Storage Temperature (°F)**	AC -10 °C to 50 °C (14 °F to 122 °F) DC -10 °C to 60 °C (14 °F to 140 °F) Display Models: -10 °C to 60 °C (14 °F to 140 °F) Storage Temp: -15 °C to 70 °C (5 °F to 158 °F)	DC -10 °C to 70 °C (14 °F to 158 °F) AC -10 °C to 60 °C (14 °F to 140 °F) -15 °C to 70 °C (5 °F to 158 °F)
Relative Humidity	0 to 99% condensing environment	0 to 95%, non-condensing
Power Requirements	DC - 24 VDC nominal (10.8 to 35.2 VDC regulated) 500 mA maximum AC - 100-240 VAC, ±10%, regulated 50-60 Hz, 24 VA max	DC - 24 VDC nominal (12 to 32 VDC, ±10% regulated) AC - 100 to 240 VAC, 50 to 60 Hz, 24 VA
Standards and Approvals	CE, UL, CUL, FCC, RoHS Compliant, China RoHS, NEMA 4X/IP65	CE, FCC, UL, CUL, RoHS compliant, China RoHS, NEMA TYPE 4X/IP65 (front face only on panel mount)

Instrument Matrix

	9900 - Panel Mount	8900
Description	Single-Channel, Multi-Parameter Transmitter	Multi-Channel (4 or 6 Channel), Multi-Parameter Controller
Modular Components	Yes	
Max. Sensor Inputs	1	6 Permanent 6 Resettable
Mounting Options	Panel, Wall, Pipe, Tank	Panel
Display	LCD with digital bar graph	LCD
Analog Output Types	(2) Passive 4 to 20 mA (1) Standard, (1) Optional with 4 to 20 mA Output module HART optional with H COMM module	(4) Passive/Active 4 to 20 mA or (4) 0 to 5/10 VDC
Max. Relays	1 open collector (standard) 2 relays (optional relay module)	up to 8 relays (via 8059)
Derived Measurements	N/A	Sum, Difference, % Recovery, % Reject, % Passage, Ratio, Power (BTU)
Languages	English	English, French, German, Spanish, Italian, and Portuguese
Operating Temperature (°C) **Operating Temperature (°F)**	-10 °C to 70 °C (14 °F to 158 °F) -15 °C to 70 °C (5 °F to 158 °F)	-10 °C to 55 °C (14 °F to 131 °F) -15 °C to 80 °C (5 °F to 176 °F)
Relative Humidity	0 to 95%, non-condensing	
Power Requirements	24 VDC input; range: 10.8 to 35.2 VDC regulated	12 to 24 VDC ±10%, regulated or 100 to 240 VAC ±10%, regulated, 50/60 Hz
Standards and Approvals	CE, FCC, UL, CUL, RoHS compliant, Lloyd's Register, China RoHS, NEMA TYPE 4X/ IP65 (front face only on panel mount); field mount is 100% NEMA TYPE 4X/IP65	CE, FCC, UL, CUL, RoHS compliant, China RoHS NEMA 4X/IP65 (front face only)

Signet 4630 Chlorine Analyzer System

The Signet 4630 Chlorine Analyzer System is an integrated all-in-one system designed to measure free chlorine. The 3-4630 chlorine panel with pH sensor is used to accurately calculate free chlorine in applications that have varying pH values (±0.20 pH units).

The unique integrated clear flow cell combines sensors, flow regulator, filter and variable area flow indicator in one compact unit. An integrated flow regulator with removable filter accepts inlet pressures of 1 to 8 bar (15 to 120 psi), while maintaining constant flow and minimal pressure to the sensors.

Water flows vertically into sensor tip eliminating bubble entrapment. The flow cell is designed to maintain a minimum amount of water to ensure sensors stay submerged, even when the system and flow is turned off.

The Signet 4630 Chlorine Analyzer System allows quick setup and easy installation and is supplied with a 100-240 VAC power supply, two 4 to 20 mA outputs and two dry contact mechanical relays. The flow cell accommodates two sensors: one chlorine and an optional pH sensor.

Features

- **EPA 334.0 Compliant**
- **Reagent free measuring**
- **Complete panel system allows for quick and easy installation**
- **Built-in flow regulator maintains constant flow and pressure to the sensors regardless of inlet pressure**
- **Pre-wired panel includes a 100/240 VAC power supply, two 4 to 20 mA outputs and two mechanical relays**
- **Optional automatic pH compensation**

c UL us LISTED MEASURING EQUIPMENT 77CJ

Applications

Residual Chlorine Monitoring:

- **Water Distribution**
- **Ground Water**
- **Surface Water**
- **HVAC Applications (cooling water)**
- **Gray Water Dechlorination**
- **Food and Beverage**
- **RO Membrane Protection**
- **Swimming Pools**
- **Aquariums**
- **Water Parks**

EPA Compliant According to Method 334.0

The 3-4630 chlorine system can be used for reporting chlorine residuals in accordance with EPA Method 334.0

U.S. Patent Nos: 8,336,375 B2, 6,666,701

Specifications

General		
Compatible	3-2630-1 Free Chlorine Electrode, 0.02 to 2 ppm / 3-2650-7 Amperometric Electronics	
	3-2630-2 Free Chlorine Electrode, 0.05 to 5 ppm / 3-2650-7 Amperometric Electronics	
	3-2630-3 Free Chlorine Electrode, 0.1 to 20 ppm / 3-2650-7 Amperometric Electronics	
	Signet 3-2724-00 Flat pH Electrode, 0 to 14 pH / 3-2750-7 pH Sensor Electronics	
Materials		
Panel	Black Acrylic	
Flow Cell	Acrylic	
Wiring Enclosure	Polycarbonate	
Wetted Materials		
Flow Cell, Spacer Rings	Acrylic	
Flow Regulator Housing	Polycarbonate	
Strainer, E-clip, Regulator Spring, Float	Stainless Steel	
Valves, Vent	Polypropylene	
Flow Cell O-rings, Diaphragm	EPR (EPDM), FKM	
Chlorine Electrode	PVC, PTFE, FKM, Nylon, Silicone	
pH electrode	PPS, Glass, UHMW PE, FKM	
Sealing Tape on Valves, Plug and Vent	PTFE	
Plug	Polyethylene	
Max. Temperature/Pressure Rating		
System Inlet Pressure Rating	1 to 8 bar	15 to 120 psi
Pressure Regulator	< 0.69 bar (10 psi) variation over all ranges of flow and pressure	
Flow Tolerance	± 15% or rated specification above	
Flow Rate Limits	30.24 to 45.36 LPH	8 to 12 US gal/h
Storage Temperature	0 °C to 65 °C	32 °F to 149 °F
Operating Temperature	0 °C to 45 °C	32 °F to 113 °F
pH Range	5.0 to 8.2 pH	
Electrical		
AC Input - Standard Configuration	100 to 240 VAC nominal 50 to 60 Hz, 0.17 A at 100 VAC	
DC Input - Optional Configuration	12 to 24 VDC ±10% regulated, 250 mA max.	
Environmental		
Relative Humidity	0 to 95%	
Maximum Altitude	2000 m (6,562 ft)	
Enclosure	NEMA 4X (with output wire glands sealed)	
Shipping Weight		
	10 kg	22 lb
Standards and Approvals		
	CE, FCC, UL, CUL	
	China RoHS	
	Manufactured under ISO 9001 for Quality and ISO 14001 for Environmental Management and OHSAS 18001 for Occupational Health and Safety	

Dimensions

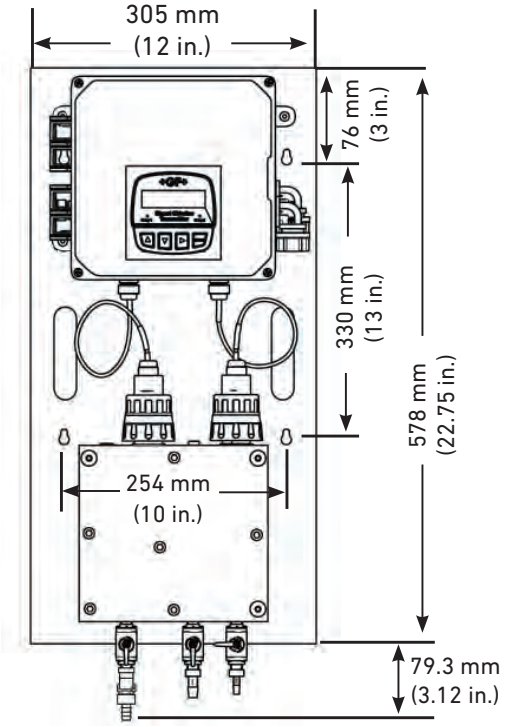
305 mm
(12 in.)
76 mm
(3 in.)
330 mm
(13 in.)
578 mm
(22.75 in.)
254 mm
(10 in.)
79.3 mm
(3.12 in.)

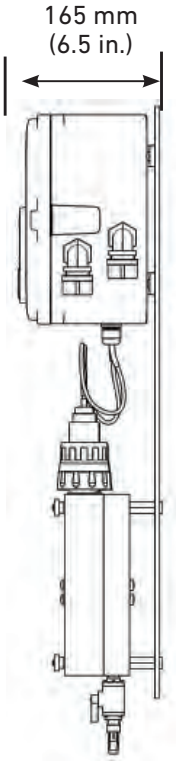
165 mm
(6.5 in.)

Ordering Information

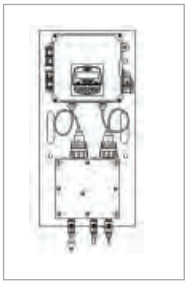

Mfr. Part No.	Code	Description
Chlorine panel, transmitter, free chlorine sensor and sensor electronics, with pH sensor		
3-4630-11	**159 001 749**	Chlorine sensor measures 0.02 to 2 ppm, with pH sensor
3-4630-21	**159 001 692**	Chlorine sensor measures 0.05 to 5 ppm, with pH sensor
3-4630-31	**159 001 751**	Chlorine sensor measures 0.1 to 20 ppm, with pH sensor

Accessories and Replacement Parts

Mfr. Part No.	Code	Description
3-2630-1	**159 001 746**	Free Chlorine sensor, 0.02 to 2 ppm (mg/l)
3-2630-2	**159 001 662**	Free Chlorine sensor, 0.05 to 5 ppm (mg/l)
3-2630-3	**159 001 747**	Free Chlorine sensor, 0.1 to 20 ppm (mg/l)
3-2724-00	**159 001 545**	pH sensor, flat glass, PT1000 temp element, ¾ in. NPT
3-2650-7	**159 001 670**	Chlorine - In-line Amperometric Electronics, Digital (S^3L), 4.6 m (15 ft) cable
3-2751-1	**159 001 804**	pH - In-line Smart Electronics, Digital (S^3L), 4.6 m (15 ft) cable
3-8630-3P	**159 001 673**	Panel mount chlorine and pH transmitter
3-4630.390	**159 001 688**	Rebuild kit for pressure regulator: O-rings, boots, screws, 1 filter screen
3-4630.391	**159 001 689**	Pressure regulator with 1 spare filter screen
3-4630.392	**159 001 690**	Acrylic flow cell complete with all components and connections
3-2630.391	**159 001 674**	Electrolyte kit, 30 ml bottle with syringe and needle
3-2630.394	**159 310 164**	Free Chlorine Replacement PTFE membrane (1)
3-2630.398	**159 310 166**	Free Chlorine sensor maintenance kit - (2) electrolyte and (2) PTFE membranes, (2) silicone bands, and polishing paper
7300-0024	**159 001 693**	24 VDC Power Supply
3-0700.390	**198 864 403**	pH Buffer Kit: 1 each 4, 7, 10 pH buffer in powder form, makes 50 ml of each
3822-7004	**159 001 581**	pH 4.01 buffer solution, 1 pint (473 ml) bottle
3822-7007	**159 001 582**	pH 7.00 buffer solution, 1 pint (473 ml) bottle
3822-7010	**159 001 583**	pH 10.00 buffer solution, 1 pint (473 ml) bottle
3-2700.395	**159 001 605**	Calibration kit: 3 polypropylene cups, box used as cup stand,1 pint pH 4.01, 1 pint pH 7.00
3800-5000	**159 838 107**	3.0M KCl storage solution for pH and ORP, 1 pint (473 ml) bottle
3-2700.397	**159 001 870**	Protective cap for pH/ORP electrodes, 5 pieces
3-2700.398	**159 001 886**	Lubricant kit

Signet Flow Switch Kit

Flow switch assembly

The Signet Flow Switch Kit provides a level of protection and a sense of security to automated processes by protecting against accidental or overdosing of disinfectant solutions such as Chlorine, Sodium Hypochlorite, or Chlorine Dioxide into a system when flow has been interrupted. The flow switch interrupt provides cost saving on chemicals and could also prevent damage to the piping system. It is factory set to deactivate/open when flow levels inside the flow cell drop below 0.378 lpm (0.1 gpm) which removes the supply power to the chemical dosing pumps.

The flow switch kit is easily installed into the 4630 Chlorine Analyzer System's flow cell, and wires into the electrical box in less than 15 minutes. The kit comes complete with a DIN rail mount, 10 amp relay, two terminal connectors, flow switch assembly and corrosion resistant flex conduit and cable glands.

Features

- **Saves chemicals cost**
- **Prevents chemical dosing when flow is interrupted**
- **Mounts directly into the 4630 flow cell**
- **Interrupts power to the 8630-3P mechanical relays**

Applications

Residual Chlorine Monitoring:

- **Water Distribution**
- **Ground Water**
- **Surface Water**
- **HVAC Applications (cooling water)**
- **Gray Water Dechlorination**
- **Food and Beverage**
- **RO Membrane Protection**
- **Swimming Pools**
- **Aquariums**
- **Water Parks**

System Overview

Flow Switch Kit

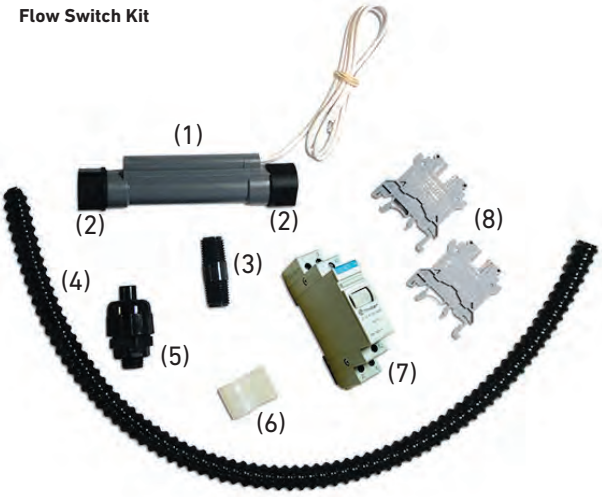

1 - Flow switch (1)
2 - End adapter (2)
3 - Threaded PVC nipple 1/4" (pre-assembled into flow switch) (1)

Flow switch assembly

4 - Liquid-tight flex conduit (1)
5 - Liquid-tight fitting 1/4" (1)
6 - Adhesive-backed nylon clamp 1/2" (1)
7 - Relay (1)
8 - DIN-rail terminal (2)

Specifications

General					
Compatibility		3-4630-XX Free Chlorine Analyzer System			
Flow Switch					
	Material	Polypropylene Body			
	Switch Type	Reed			
	Contact Rating	70 VA, 50 w resistive			
	Maximum Switching Voltage	AC	300	DC	350
	Maximum Switching Current	AC	0.5 amps	DC	0.7 amps
Mechanical Relay					
	Relay Type	General purpose			
	Coil Voltage VDC Nom.	24 VDC			
	Contact Current Max.	10 AMP			
	Contact Voltage AC Nom.	250 V			
	Contact Configuration	DPDT			
Shipping Weights					
		0.05 kg	0.12 lb		
Standards and Approvals					
		Standards and approvals vary depending on the component. Refer to the instruction sheet for more information.			

Dimensions

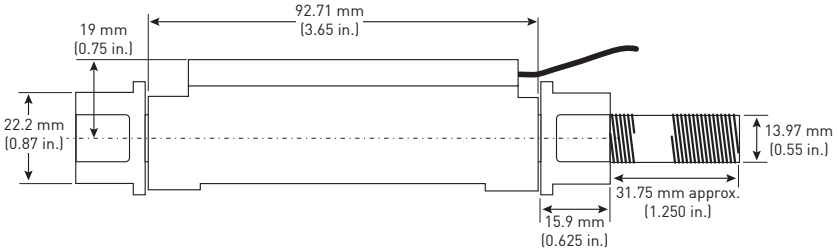

Ordering Information

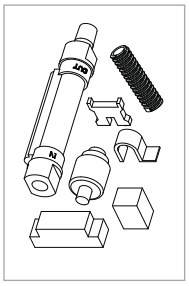

Mfr. Part No.	Code	Description
3-4630.393	**159 310 162**	Flow Switch Kit, PP

3-263X.XXX Chlorine Calibration Accessories

Instruments and Misc. >>

Free Chlorine or Chlorine dioxide calibration kits

DPD Kit:
Required to properly support the Signet Free Chlorine and Chlorine Dioxide Amperometric Sensor panel assemblies

- EPA approved method to test Free Chlorine
- Used for initial startup and calibration of the 3-463X chlorine panels
- Use after maintenance/service of the 3-263X series Free Chlorine sensors
- Assist in system troubleshooting
- 100 reagent test dispenser and thermometer sold separately

SAP Material Number 150 301 006

3-263X.XXX	
0.683	Free Chlorine Photometer 0 -10 ppm
0.684	FCL Reagent Dispenser - 100 test
0.385	Thermometer
2.686	Chlorine Dioxide Photometer 0 -10 ppm

Example Part Number

3-2632.686

Calibration Kit with Chlorine Dioxide Photometer 0 -10 ppm

FCL Reagent Dispenser

Thermometer

Thermometer can be used to calibrate pH and conductivity sensors

General	
Range	0 - 10 mg/l
Method	EPA Approved - DPD
Resolution	
	0.01 ppm for 0 - 6 ppm
	0.1 ppm for 6 - 10 ppm
Measurement	1 cm path length
Accuracy	
	2% 0 -6 ppm
	10% 6 -10 ppm
Response Time	3 seconds
Power Supply	4 - AAA alkaline batteries (up to 1000 tests)
Display	7 segment bright vision LCD

Certification	CE	
Light Source	Longlife LED - 515 mm	
Sample Size	3 ml	
Enclosure	IP67, waterproof at 1 m for 30 minutes	
Shipping Weight		
Photometer	1.00 kg	2.2 lb
Reagent Dispenser	0.23 kg	0.50 lb
Thermometer	0.12 kg	0.26 lb
Standards and Approvals		
	CE	

Special order products may not meet all of the specifications of the standard sensor assemblies.

Maintenance - 2630 Free Chlorine Electrode
Maintenance - 2632 Chlorine Dioxide Electrode

Verifying the sensors accuracy using the DPD method should be performed to determine if the sensor requires maintenance.

1. Inspect the membrane for dirt or damage. Replace the membrane if its torn or if the gold cathode is visible.
2. If the membrane is dirty, clean the membrane by soaking it in 1 - 5% HCl and gently washed with a stream of DI water. (do not use any mechanical device on the membrane)

Required for sensor maintenance:

- DI Water
- Beaker (any size available)
- Polishing Papers (Included in sensor maintenance kit)

Gold Electrode Polishing Procedure:

1. Remove the sensor from the 2751-1 electronics.
2. Remove the membrane cap.
3. Place the sensor on a firm flat surface with the gold cathode pointing upward.
4. If the cathode surface has not been polished in a long time, looks really dull or have visible scratches use the Blue (Coarse) polishing paper (dull side) and polish the gold plated electrode by moving the paper in a circular pattern for no longer than 5-10 seconds. DO NOT go back and forth in a single direction. See Figure 1.
   If the electrode has been recently polished and does not show obvious discoloration and scratches, go to Step 5.
5. Find the White (Fine) polishing paper (dull side) in the electrode box. Start polishing the gold electrode by moving the paper is a circular pattern for 1-2 minutes or until the surface of the gold has a mirror shine finish. DO NOT go back and forth in a single direction. **See Figure 1.**

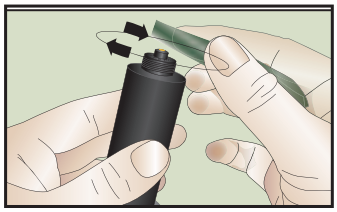

Figure 1

6. Rinse the sensor tip with DI water.
7. Top off the sensor with electrolyte and inspect membrane for dirt or damage. Replace if necessary.
8. Screw the membrane cap back onto the sensor and connect to 2650 electronics and place back in the flow cell and restore flow to the system.
9. Calibrate the sensor after the system has become stable, 2-4 hours.

Refill Procedure:

When adding electrolyte, be prepared for an accidental spill. Working near a sink is recommended.

1. Remove the membrane cap from the front of the sensor.
2. Turn the sensor upside down and shake the sensor vigorously to remove the internal electrolyte.
3. Fill supplied syringe with electrolyte solution. Additional caution should be taken when handling Chlorine Dioxide electrolyte solution.
4. Place the electrode on a level surface.
5. Insert syringe needle fully into one of the eight electrode holes while injecting with electrolyte solution. Slowly inject the electrolyte solution into the sensor to avoid introducing air bubbles. The electrode holds approximately 14 milliliters of solution. Slowly fill until solution begins to flow out of holes. Do not allow the solution to run down the electrode and wet the electrical contacts in the DryLoc connector.
6. Top off with electrolyte prior to putting cap on. Slowly screw on the membrane cap finger tight. Do not use tools. **To avoid damage and contamination, do not touch the white membrane surface on the membrane cap.**

Step 1

Step 2

Step 5

CAUTION: DO NOT touch the gold plated tip or the membrane of the sensor.

- If HCl rinse followed by water rinse does not clean the membrane and improve sensor's slope (nA/ppm), membrane will need to be replaced.
- Keep spare membrane caps available. Membrane caps carry no warranty.
- If the sensor is unresponsive after polishing the electrode, changing the membrane and the changing the electrolyte, we suggest to perform the Reconditioning Procedure using chlorine bleach or chlorine dioxide as described in the sensor's manual.

Store electrode between -10 °C to 60 °C (-4 °F to 140 °F) at a relative humidity that does not exceed 95%.
The primary concerns when storing the electrode is membrane dehydration and freezing in extremely cold environments.

Signet 2630 Amperometric Chlorine Electrode

The Signet 2630 Amperometric Chlorine Electrode is designed to measure free chlorine in fresh water treatment applications. The electrode is available with a measurement range of 0.02 to 2 ppm, 0.05 to 5 ppm or 0.1 to 20 ppm. This electrode requires the Signet 2650 Amperometric Electronics module to communicate with the Signet 8630-3P Chlorine Transmitter.

Utilizing smart-sensor technology, this electrode has a unique embedded memory chip and can communicate a wide variety of information to the Signet 2650 electronics and Signet 8630-3P Transmitter.

Displayed information includes electrode type, factory calibration data, service time, chlorine range, high and low pH (with optional Signet pH electrode), temperature values and more.

Signet's patented DryLoc® connector provides quick assembly and a secure connection. Gold-plated contacts and an O-ring seal ensure a waterproof and reliable interconnect to the Signet 2650 Amperometric Electronics.

The Signet 2630 Amperometric Chlorine Electrode has an integrated temperature element for automatic temperature compensation.

Features

- **Embedded memory chip accessible via the Signet 8630 transmitter**
- **Quick assembly with Signet's patented DryLoc® connector**
- **Integrated temperature element for automatic temperature compensation**
- **Separate drive electronics (Signet 2650), for easy electrode replacement without running new cable**

Applications

Residual Chlorine Monitoring:

- **Water Distribution**
- **Ground Water**
- **Surface Water**
- **HVAC Applications (cooling water)**
- **Boiler Feed Water**
- **Gray Water Dechlorination**
- **Food and Beverage**
- **RO Membrane Protection**
- **Swimming Pools**
- **Aquariums**
- **Water Parks**

U.S. Patent No: 6,666,701

Specifications

General				
Polarization Source		Signet 2650 Amperometric Electronics		
Compatibility		3-4630.392 Acrylic flow cell complete with all components and connections		
Mounting		Signet DryLoc connection		
Materials		CPVC		
Free Chlorine				
	Membrane Material	PTFE		
	O-ring Material	FKM		
	Working Electrode	Gold plated		
	Counter Reference Electrode	Silver halide		
Wetted Material				
		PVC, PTFE, FKM, Nylon, Silicone		
Performance				
Electrode				
	Repeatability	±0.08 ppm (mg/l) or 3% of selected range whichever is less		
	Slope	15 to 85 nA/ppm (mg/l)		
	Response Time, T90	< 2 minutes		
System (including electronics and instrument)				
	Accuracy	< ±3% of electrode signal after calibration		
	Resolution	±0.5% of electrode range		
Sensor Conditioning				
	New, first start-up	4 hours maximum before calibration		
	Subsequent start-ups	2 hours maximum		
Temperature Element		PT1000, Class B		
Operational Ranges and Limits				
	Free Chlorine Range	0.02 to 2 ppm (mg/l)	0.05 to 5 ppm (mg/l)	0.1 to 20 ppm (mg/l)
	Free Chlorine pH Operating Range	5.0 to 8.2 pH		
Maximum Media Temperature		0 °C to 45 °C	32 °F to 113 °F	
Maximum Operating Pressure				
Membrane		0.48 bar @ 25 °C (7 psi @ 77 °F)		
Flow Velocity Across Membrane Surface				
	Minimum	15 cm/s (0.49 ft/s)		
	Maximum	30 cm/s (0.98 ft/s)		
Interferences		ClO_2, ozone, bromine		
Chemical Compatibility		< 50% ethanol/water, < 50% glycerol/water		
Environmental				
System Temperature		-10 °C to 60 °C	-4 °F to 140 °F	
Storage Temperature		-10 °C to 60 °C	-4 °F to 140 °F	
Relative Humidity		0 to 95% indoor/outdoor non-condensing to rated ambient		
Shipping Weight				
		0.14 kg	0.30 lb	
Standards and Approvals				
		CE, FCC		
		RoHS compliant, China RoHS, Made in USA from US and Imported Parts		
		Manufactured under ISO 9001 for Quality		

Dimensions

3-2630-X

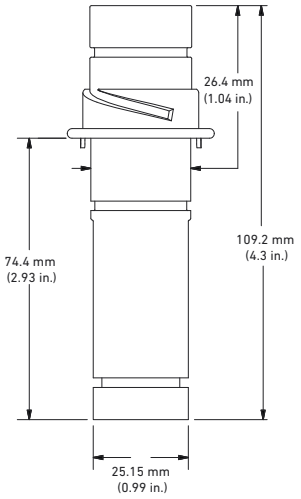

System Overview

Panel Mount	
Signet Instrument 8630-3P	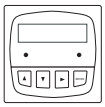
Signet Amperometric Electronics 2650-7	
Signet 2630-X **Chlorine Electrode**	
Signet Flow Cell 3-4630.392	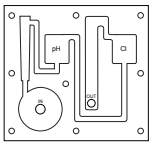 All sold separately

Application Tips

- The sensors should not be used in water containing surfactants, oils, organic chlorine or stabilizers such as cyanuric acid.

Ordering Notes

1) The sensor must have a stable and constant flow of water past its membrane for accurate free chlorine measurement. Typical flow rate should be 30.24 - 45.36 lph (8 - 12 gph).

Ordering Information

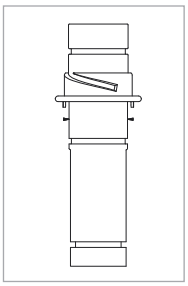

Mfr. Part No.	Code	Description
3-2630-1	**159 001 746**	Free Chlorine Electrode, 0.02 to 2 ppm (mg/l)
3-2630-2	**159 001 662**	Free Chlorine Electrode, 0.05 to 5 ppm (mg/l)
3-2630-3	**159 001 747**	Free Chlorine Electrode, 0.1 to 20 ppm (mg/l)

Accessories and Replacement Parts

Mfr. Part No.	Code	Description
3-2630.391	**159 001 674**	Electrolyte Kit, 30 ml (2) bottles with syringe and needle
3-2630.394	**159 310 164**	Free Chlorine replacement PTFE membrane (1)
3-2630.398	**159 310 166**	Free Chlorine Sensor Maintenance Kit - (2) electrolyte and (2) PTFE membranes, (2) silicone bands, polishing paper and (1) fill syringe
3-2600.510	**159 500 422**	Silicone band, Chlorine Sensor

Signet 2632 Amperometric Chlorine Dioxide Electrode

The Signet 2632 Amperometric Chlorine Dioxide electrode is designed to measure chlorine dioxide residual in water treatment applications. The electrode is available with a measurement range of 0 to 2 ppm. This electrode requires the Signet 2650 Amperometric Electronics module to communicate with the Signet 8630-3P Chlorine Transmitter.

Utilizing smart-sensor technology, this electrode has a unique embedded memory chip and can communicate a wide variety of information via the Signet 2650 electronics to the Signet 8630-3P Transmitter.
The 8630 displayed information includes electrode type, factory calibration data, service time, chlorine range, high and low pH (with optional Signet pH electrode), temperature values and more.

Signet's patented DryLoc® connector provides quick assembly and a secure connection. Gold-plated contacts and an O-ring seal ensure a waterproof and reliable connection to the Signet 2650 Amperometric Electronics.

The Signet 2632 Amperometric Chlorine Dioxide Electrode has an integrated temperature element for automatic temperature compensation.

Features

- **Embedded memory chip accessible via the Signet 8630 transmitter**
- **Quick assembly with Signet's patented DryLoc® connector**
- **Integrated temperature element for automatic temperature compensation**
- **Separate drive electronics (Signet 2650), for easy electrode replacement without running new cable**

Applications

Residual Chlorine Monitoring:

- **Cooling Towers**
- **Ground Water**
- **Fruit and Vegetable Washing**
- **Water Distribution**
- **Wastewater Odor Control**
- **Poultry and Meat Processing**
- **UPW Treatment**
- **Hospital and Healthcare Facilities**

U.S. Patent No: 6,666,701

Specifications

General			
Polarization Source		Signet 2650 Amperometric Electronics	
Compatible Flow Cells		3-4630.392 Acrylic flow cell complete with all components and connections	
Mounting		Signet DryLoc connection	
Materials		CPVC	
Chlorine Dioxide			
	Membrane Material	PTFE	
	O-ring Material	FKM	
	Working Electrode	Gold plated	
	Counter Reference Electrode	Silver halide	
Wetted Material			
		PVC, PTFE, FKM, Nylon, Silicone	
Performance			
Electrode			
	Repeatability	±0.08 ppm (mg/l) or 3% of selected range, whichever is less	
	Slope	40 to 200 nA/ppm (mg/l) @ 17 °C	
	Response Time, T90	< 2 minutes	
System (including electronics and instrument)			
	Accuracy	< ±3% of electrode signal after calibration	
	Resolution	≤ 0.5% of electrode range	
Sensor Conditioning			
	New, first start-up	4 hours maximum before calibration	
	Subsequent start-ups	2 hours maximum	
Temperature Element		PT1000	
Operational Ranges and Limits			
	Chlorine Dioxide Range	0.02 to 2 ppm (mg/l)	
	pH Operating Range	4.0 to 11.0 pH	
Operating Temperature		0 °C to 45 °C	32 °F to 113 °F
Maximum Operating Pressure			
Membrane		0.48 bar @ 25 °C (7 psi @ 77 °F)	
Flow Velocity Across Membrane Surface			
	Minimum	15 cm/s (0.49 ft/s)	
	Maximum	30 cm/s (0.98 ft/s)	
Chemical Compatibility		< 50% ethanol/water, < 50% glycerol/water	
Environmental			
Operating Temperature		0 °C to 45 °C	32 °F to 113 °F
Storage Temperature		-10 °C to 60 °C	-4 °F to 140 °F
Relative Humidity		0 to 95% indoor/outdoor non-condensing to rated ambient	
Shipping Weight			
		0.14 kg	0.30 lb
Standards and Approvals			
		CE, FCC	
		RoHS compliant, China RoHS, Made in USA from US and Imported Parts	
		Manufactured under ISO 9001 for Quality	

Dimensions

3-2632-1

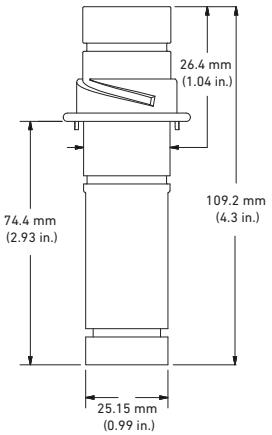

System Overview

Panel Mount	
Signet Instrument 8630-3P	
Signet Amperometric Electronics 2650-7	
Signet 2632-1 **Chlorine Dioxide** **Electrode**	
Signet Flow Cell 3-4630.392	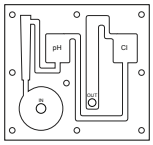 All sold separately

Application Tips

- The sensors should not be used in water containing surfactants, oils, organic chlorine or stabilizers such as cyanuric acid.

Ordering Notes

1) The sensor must have a stable and constant flow of water past its membrane for accurate chlorine measurement. Typical flow rate should be 30.24 - 45.36 lph (8 - 12 gph).

Ordering Information

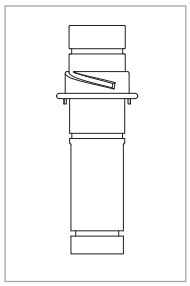

Mfr. Part No.	Code	Description
3-2632-1	**159 001 767**	Chlorine Dioxide electrode, 0.02 to 2 ppm (mg/l)

Accessories and Replacement Parts

Mfr. Part No.	Code	Description
3-2632.391	**159 310 160**	Chlorine Dioxide electrolyte, 30 mL (2) bottles
3-2632.398	**159 310 165**	Chlorine Dioxide maintenance kit - (2) electrolyte, (2) PTFE membranes, (2) silicone bands, polishing paper, and (1) fill syringe
3-2630.394	**159 310 164**	Free Chlorine and Chlorine Dioxide Replacement PTFE membrane (1)

Signet 2650 DryLoc® Amperometric Electronics

The Signet 2650 DryLoc® Amperometric Electronics provide the polarization voltage and signal conditioning required by all Signet Amperometric Sensors. The 2650 Amperometric Electronics also relays important sensor information that is stored on a memory chip inside the sensor to be displayed on the 3-8630-3P transmitter. Information includes factory calibration data, service life, calibration information and more.

Signet's patented DryLoc® connector provides a quick and secure connection to the sensor. Gold-plated contacts and an O-ring seal ensure a waterproof and reliable interconnect to the sensor.

Sensor maintenance, replacement and troubleshooting has never been easier. The DryLoc electronics can be separated from the sensor, which allows the user to detect a faulty sensor, electronics or cable assembly.

System Overview

Panel Mount	
Signet Transmitter 8630-3P	
Signet 2650-7 Amperometric Electronics	
Signet Electrode 2630-1 2630-2 2630-3 2632-1	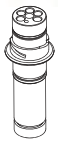
Signet Flow Cell 3-4630.392	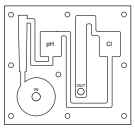 All sold separately

Features

- **Conditions the signal from the 2630 sensor and provides sensor stored data to the Chlorine transmitter**
- **Patented DryLoc® connector provides a quick and secure connection to the sensor**
- **Waterproof and reliable interconnect to the sensor**
- **Easy sensor replacement without running new cable**
- **Easy sensor removal for servicing**

Applications

Residual Chlorine Monitoring:

- **Water Distribution**
- **Ground Water**
- **Surface Water**
- **HVAC Applications (cooling water)**
- **Gray Water Dechlorination**
- **Food and Beverage**
- **RO Membrane Protection**
- **Swimming Pools**
- **Aquariums**
- **Water Parks**

U.S. Patent No.: 6,666,701

Specifications

General			
Compatibility		All Signet Amperometric DryLoc Sensors	
		Signet 3-8630-3P Chlorine Transmitter	
		All 3-4630 Chlorine panel assemblies	
Mounting		DryLoc connection	
Materials		Valox® (PBT)	
Cable		4.6 m (15 ft) 3 conductor shielded, 22 AWG	
Performance			
Electronics Accuracy		< 5 nA or 1% of reading, whichever is greater @ 25 °C over full input range	
Temperature		±1.0 °C (PT1000) over full operation range (when calibrated at ambient temperature)	
Update Rate		500 ms	
Operational Range		±450 mV	
Resolution		0.1 nA	
Electrical			
Input Specifications			
	Sensor	Raw signal	
	Temperature	PT1000 RTD	
Output Specifications			
	Digital (S^3L)	Serial ASCII, TTL level 9600 bps	
	Max. Cable Length	30 m (100 ft)	
	Power Supply Input	Digital (S^3L) mode	5 to 6.5 V ± 10%, 3 mA max.
Environmental			
Operating Temperature		0 °C to 85 °C	32 °F to 185 °F
Storage Temperature		-20 °C to 85 °C	-4 °F to 185 °F
Relative Humidity		0 to 95%, non-condensing	
Enclosure		NEMA 4X/IP65	
Shipping Weight			
		0.64 kg	1.41 lb
Standards and Approvals			
		CE, FCC	
		RoHS compliant, China RoHS, Made in USA from US and Imported Parts	
		Manufactured under ISO 9001 for Quality and ISO 14001 for Environmental Management and OHSAS 18001 for Occupational Health and Safety	

Dimensions

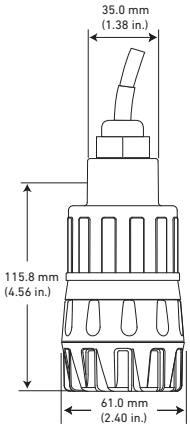

Ordering Information

Mfr. Part No.	Code	Description
3-2650-7	**159 001 670**	Amperometric in-line sensor electronics, Digital (S^3L), 4.6 m (15 ft) cable

Valox® is a registered trademark of SABIC Innovative Plastics

Signet 2610 Process Optical Dissolved Oxygen Sensor

Gen II

The Signet 2610 RDO® Pro is a rugged, reliable sensor designed to deliver accurate dissolved oxygen (DO) data across a wide measuring range while reducing maintenance costs. It features the latest optical technology for DO measurement and eliminates the replacement of membrane and reference solutions.

The Signet 2610 optical sensor cap is calibrated at the factory and requires no field calibration. The optical measurement technology resists abrasion and bleaching allowing for a long life in many harsh applications. The DO sensor has a built in Modbus RS485 and 4 to 20 mA current loop outputs for ease of interface to existing control systems. The 3-2610-51 version includes the Signet digital (S^3L) interface for direct connection with the 9900 SmartPro® Transmitter, 9950 SmartPro® Dual Channel Transmitter and 8900 Multi-Parameter Controller.

Additional features include a 10 m (32.8 ft) cable with stripped and tinned ends as well as a titanium temperature sensor for improved compatibility in salt water applications.

Features

- **Two year measurement cap life**
- **Optical DO measurement, no flow requirements**
- **Rugged construction**
- **Calibration built into the measurement cap 2% of range 0 to 20 mg/l**
- **No membranes or filling solutions**
- **Flexible communications Digital (S^3L), 4 to 20 mA or Modbus**
- **Measurement Range: 0 to 20 mg/L, in-line or submersible**
- **3-2610-51 compatible with 9900 SmartPro Transmitter, 9950 SmartPro Dual Channel Transmitter and 8900 Multi-Parameter Controller**

Applications

- **Municipal and Industrial Wastewater Treatment**
- **Drinking Water Reservoir Monitoring**
- **Environmental Water Discharge Monitoring**
- **Aquatic Life Support**

System Overview

Panel Mount	Pipe, Tank, Wall	4 to 20 Input	Automation System	In-line Installation
Signet Instruments 8900 9900 9950	Signet Instruments 9900 with 3-8050 Universal Mount Kit	Signet D100 DeviceLink Network or Customer Supplied Chart Recorder, Programmable Logic Controller, or Programmable Automation Controller	0486 Profibus Concentrator and Customer Supplied Programmable Logic Controller or Programmable Automation Controller	Signet Pipe Adapter 3-2610.501

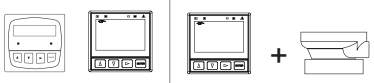

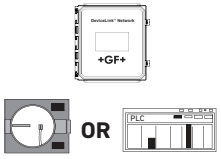

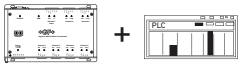

Signet 2610-51 Process Optical Dissolved Oxygen Sensor

All sold separately

Specifications

General		
Sensor Type	Luminescent dissolved oxygen sensor	
Transmitter/Local Display	Optional, not required. Compatible with 8900 and SmartPro instruments	
Communications Options	Digital (S^3L), 4 to 20 mA, Modbus (RS485)	
Maximum Cable Length	Modbus and 4 to 20 mA: up to 1,219 m (4,000 ft)	Digital (S^3L): 38 m (125 ft)
Internal Mounting Thread	1¼ NPT	
Power Requirements	12 to 24 VDC ±10% regulated	
4 to 20 mA Output Span	0 to 20 mg/L	
Performance		
Salinity Range	0 to 42 PSU, fixed or real-time capable	
pH Range	2 to 10 pH	
Barometric Range	507 to 1,115 mbar, fixed or real-time capable	
Maximum Pressure	300 psi	
Range	0 to 20 mg/L concentration, 0 to 200% saturation	
Accuracy (DO)	±0.1 mg/L, 0 to 8 mg/L,	
	±0.2 mg/L, 8 to 20 mg/L	
Response Time of Cap	T90: 30 sec	
	T95: 37 sec @ 25 °C	
Repeatability	0.05 mg/L	
Resolution	0.01 mg/L	
Environmental		
Wetted Materials	ABS, Titanium and FKM	
Usage Life of Cap	2 years from the first instrument reading	
Shelf Life of Cap	24 months from date of manufacture (install within 12 mo. of manufacture)	
Operating Temperature	0 °C to 50 °C	32 °F to 122 °F
IP Rating	IP-67 with cap off, IP-68 with cap installed	
Compliance	Heavy industrial, IEC 61000-6-2:2005	
Storage Conditions, Cap	1 °C to 60 °C	33 °F to 140 °F, in factory container
Storage Conditions, Sensor	-5 °C to 60 °C	23 °F to 140 °F
Warranty		
Sensor	3 years from date of manufacture	
Standards and Approvals		
	CE, FCC	
	RoHS Compliant, China RoHS, Made in USA from US and Imported Parts	

Dimensions

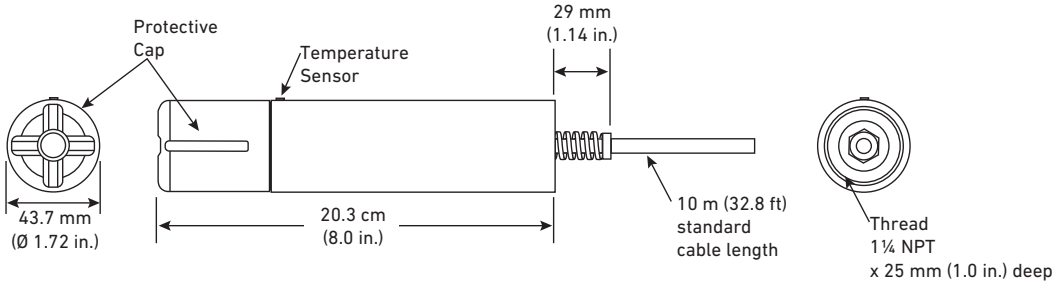

Ordering Information

Mfr. Part No.	Code	Description
3-2610-51	**159 001 849**	Gen II Optical Dissolved Oxygen Sensor (0 to 20 ppm) with Digital S^3L, 4 to 20 mA, and Modbus output
3-2610.392	**159 310 122**	Replacement Optical Dissolved Oxygen Sensor Cap (0 to 20 ppm) for 3-2610-31 and 3-2610-41 DO Sensors
3-2610.394	**159 310 301**	Replacement Optical Dissolved Oxygen Sensor cap (0 to 20 ppm) for Gen II 3-2610-51 DO Sensor
3-2610.501	**159 500 413**	DO Threaded Pipe Adapter kit, includes one each: 2 in. male NPT pipe adapter, 1¼ in. closed nipple, ¾ in. closed nipple.
3-0252	**159 001 808**	Configuration Tool

3-2610.XXX Dissolved Oxygen Accessories

Dissolved Oxygen >>

Rail mount adapter, extension pipes and float assembly for Dissolved Oxygen, pH, ORP, and Conductivity sensors.

The rail mount adapter has a dual pivot point which allows any GF Signet sensor pipe assembly (sold separately) to move, both vertically and horizontally, over an open channel, tank, or process weir. Once the sensor is brought out of the solution vertically, a safety pin locks the sensor into position, and the horizontal axis is used to swing the sensor assembly safely outside the process area for maintenance and cleaning. Manufactured out of SS for corrosion resistance.

The GF Signet float assembly allows any Signet electrode to be placed into a process at a specific depth. The float comes complete with a 1 inch male NPT nipple assembly, which threads into a customer supplied piping system.

SAP Material Number 150 301 006

3-2610.XXX	
3-2610.312	Rail Mount Adapter and extension pipes for Dissolved Oxygen, pH, ORP, and conductivity sensors
3-2610.FLT	Float Assembly for Dissolved Oxygen, pH, ORP, and conductivity sensors

Example Part Number

3-2610.312

Rail Mount adapter and extension pipes

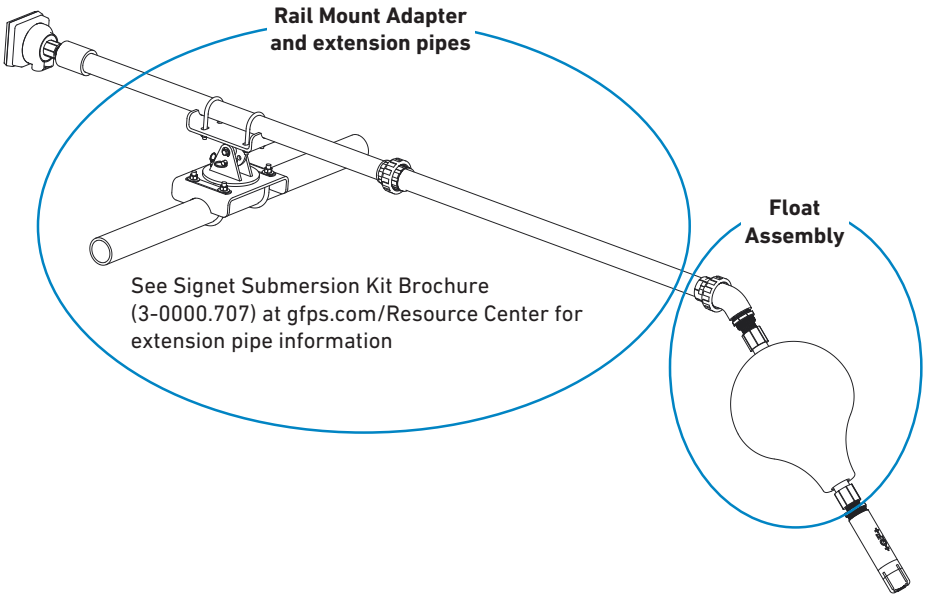

Shipping Weight	
	Contact factory

Special order products may not meet all of the specifications of the standard sensor assemblies.

Dissolved Oxygen >>

SAP Material Number 150 301 006

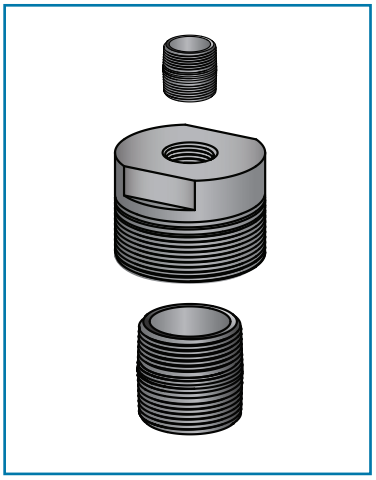

2610 Dissolved Oxygen/ 9900 Adapter Kit (3-2610.390)
The adapter kit allows a 9900 to be installed right on the 3-2610-51 sensor assembly to measure dissolved oxygen in a pressurized piping system. The kit includes a (¾" NPT closed nipple, 1¼" NPT closed nipple and DO threaded pipe adapter).
The Signet 2610 Process Optical Dissolved Oxygen sensor is sold separately. Check the specification of the 2610 DO sensor for pressure limitations.

DO Sensor Air-Blast (3-2610-81950)
Attach an air blast adapter to the DO sensor and a 20 psi air source using a ¼" OD tube, this allows the sensor to be cleaned. A 60 second blast every four hours extends the length of time between overall maintenance and cleaning. Wetted material: Acetal, SS set screw

DO Anti Fouling Guard (3-2610-81300)
Reduces biological fouling while improving measurement accuracy and extends the length of time between cleaning of the sensor. Simply attach the copper guard onto the front of the sensor. It is recommended the guard be replaced every 6 months. Wetted material: Delrin, high purity copper

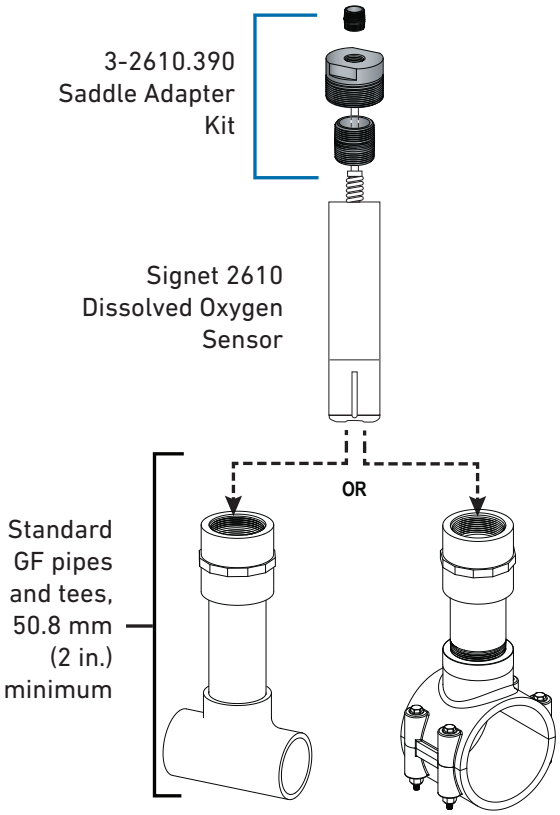

Adapters, Tees and Saddles

Adapters, Tees and Saddles
GF Signet has a line of tees and saddle assemblies in PVC and CPVC for pipes ranging 2 inch to 8 inches, to allow in-line measuring of dissolved oxygen.

Mfr. Part No.	Description
3-2610.100	2 in. Tee Assembly, PVC
3-2610.101-01	3 in. Saddle Assembly
3-2610.101-02	4 in. Saddle assembly
3-2610.101-03	6 in. Saddle Assembly
3-2610.101-04	8 in. Saddle Assembly

Shipping Weight	
	Contact the factory
Standards and Approvals	
	CE

Example Part Number
3-2610.390
DO sensor pipe adapter kit

Example Part Number
3-2610.81950
DO sensor Air-Blast

Example Part Number
3-2610.81300
DO sensor Anti Fouling Guard

Example Part Number
3-2610.101-01
3 in saddle assembly

Special order products may not meet all of the specifications of the standard sensor assemblies.

Installation Fittings

PVC Tee SCH 80 - Fitting Only

Part No.	Code No.	Size [in.]	Sensor Type	L [in.]	H [in.]	i.d [in.]
MPV8T005F	159 001 614	0.50	Flow -X0, pH -XX	3.75	3.50	0.85
MPV8T007F	159 001 615	0.75	Flow -X0, pH -XX	3.75	3.70	1.06
MPV8T010F	159 001 616	1.00	Flow -X0, pH -XX	4.30	4.00	1.33
MPV8T012F	159 001 617	1.25	Flow -X0, pH -XX	4.40	4.30	1.67
MPV8T015F	159 001 618	1.50	Flow -X0, pH -XX	5.00	4.60	1.91
MPV8T020F	159 001 619	2.00	Flow -X0, pH -XX	5.50	5.00	2.40

- For use with P51530-X0, 3-2536-X0, 3-8510-X0, 3-8512-X0, 3-2537-XC-X0, 3-2551-X0-X0-XX, 3-272X-XX, 3-273X-XX
- NSF

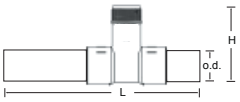

PVC Tee SCH 80 - with Pipe[1]

Part No.	Code No.	Size [in.]	Sensor Type	L [in.]	H [in.]	o.d [in.]
MPV8T005	159 001 623	0.50	Flow -X0, pH -XX	14	3.50	0.84
MPV8T007	159 001 624	0.75	Flow -X0, pH -XX	14	3.70	1.05
MPV8T010	159 001 625	1.00	Flow -X0, pH -XX	17	4.00	1.32
MPV8T012	159 001 626	1.25	Flow -X0, pH -XX	20	4.30	1.66
MPV8T015	159 001 627	1.50	Flow -X0, pH -XX	24	4.60	1.90
MPV8T020	159 001 628	2.00	Flow -X0, pH -XX	26.5	5.02	2.38

- For use with P51530-X0, 3-2536-X0, 3-8510-X0, 3-8512-X0, 3-2537-XC-X0, 3-2551-X0-X0-XX, 3-272X-XX, 3-273X-XX

[1]Pipe lengths included with these fittings do not satisfy straight-run requirements for all installation configurations.

PVC Tees SCH 80 - with Pipe[1]

Part No.	Code No.	Size [in.]	Sensor Type	L [in.]	H [in.]	o.d [in.]
PV8T025	198 801 573	2.50	Flow -X0, pH -XX	24	5.4	2.88
PV8T030	198 801 416	3.00	Flow -X0, pH -XX	24	6.0	3.50
PV8T040	198 801 436	4.00	Flow -X0, pH -XX	24	7.0	4.50

- For use with P51530-X0, 3-2536-X0, 3-8510-X0, 3-8512-X0, 3-2537-XC-X0, 3-2551-X0-X0-XX, 3-272X-XX, 3-273X-XX

[1]Pipe lengths included with these fittings do not satisfy straight-run requirements for all installation configurations.

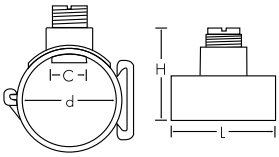

PVC Clamp-on Saddles SCH 80

Part No.	Code No.	Size [in.]	Sensor Type	L [in.]	H [in.]	d [in.]	C [in.]
PV8S020	159 000 637	2.00	Flow -X0, pH -XX	4.00	5.0	2.375	1.43
PV8S025	159 000 638	2.50	Flow -X0, pH -XX	4.75	5.4	2.875	1.43
PV8S030	198 150 577	3.00	Flow -X0, pH -XX	5.00	6.0	3.500	1.43
PV8S040	198 150 578	4.00	Flow -X0	5.00	7.1	4.500	1.43
PV8S060	198 150 579	6.00	Flow -X1	5.00	10.0	6.625	2.25
PV8S080	159 000 639	8.00	Flow -X1	5.00	11.5	8.625	2.25

- For use with P51530-X0/-X1, 3-2536-X0/-X1, 3-8510-X0/-X1, 3-8512-X0/-X1, 3-2537-XC-X0/-X1, 3-2551-X0-XX/-X1-XX, 3-272X-XX, 3-273X-XX
- Mounts on PVC pipe
- C - Clearance dimension
- EPR (EPDM) O-ring
- NSF

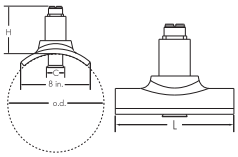

PVC Glue-on Saddle Fitting SCH 80

Part No.	Code No.	Size [in.]	Sensor Type	W [in.]	H [in.]	o.d. [in.]	C [in.]
PV8S100	159 000 695	10.00	Flow -X2	9.0	5.43	10.75	2.25
PV8S120	159 000 696	12.00	Flow -X2	9.0	5.15	12.75	2.25

- For use with P51530-X2, 3-2536-X2, 3-2551-X2-XX

Installation Fittings

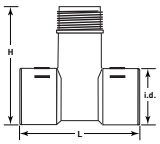

CPVC Tees SCH 80 - Fitting Only

Part No.	Code No.	Size [in.]	Sensor Type	L [in.]	H [in.]	i.d [in.]
MCPV8T005F	159 001 632	0.50	Flow -X0, pH -XX	3.75	3.50	0.85
MCPV8T007F	159 001 633	0.75	Flow -X0, pH -XX	3.75	3.70	1.06
MCPV8T010F	159 001 634	1.00	Flow -X0, pH -XX	4.30	4.00	1.33
MCPV8T012F	159 001 635	1.25	Flow -X0, pH -XX	4.40	4.30	1.67
MCPV8T015F	159 001 636	1.50	Flow -X0, pH -XX	5.00	4.60	1.91
MCPV8T020F	159 001 637	2.00	Flow -X0, pH -XX	5.50	5.00	2.40

- For use with P51530-X0, 3-2536-X0, 3-8510-X0, 3-8512-X0, 3-2537-XC-X0, 3-2551-X0-X0-XX, 3-272X-XX, 3-273X-XX

CPVC Tees SCH 80 - with Pipe[1]

Part No.	Code No.	Size [in.]	Sensor Type	L [in.]	H [in.]	o.d [in.]
MCPV8T005	159 001 641	0.50	Flow -X0, pH -XX	14	3.50	0.84
MCPV8T007	159 001 642	0.75	Flow -X0, pH -XX	14	3.70	1.05
MCPV8T010	159 001 643	1.00	Flow -X0, pH -XX	17	4.00	1.32
MCPV8T012	159 001 644	1.25	Flow -X0, pH -XX	20	4.30	1.66
MCPV8T015	159 001 645	1.50	Flow -X0, pH -XX	24	4.60	1.90
MCPV8T020	159 001 646	2.00	Flow -X0, pH -XX	26.5	5.02	2.38

- For use with P51530-X0, 3-2536-X0, 3-8510-X0, 3-8512-X0, 3-2537-XC-X0, 3-2551-X0-X0-XX, 3-272X-XX, 3-273X-XX

[1]Pipe lengths included with these fittings do not satisfy straight-run requirements for all installation configurations.

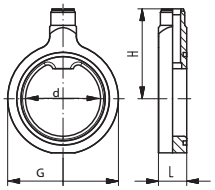

PP-H, Wafer Fitting, Metric and Inch (EPR/EPR (EPDM) gaskets)

Part No.	EPR (EPDM) Code No.	d [in.]	DN [mm]	Sensor Type	PN	d [mm]	D [mm]	H [mm]	L [mm]	L1 [mm]
PPMTE025	727 311 012	2.50	65	Flow -X1	10	75	88	133	48	61
PPMTE030	727 311 013	3.00	80	Flow -X1	10	90	102	140	48	69
PPMTE040	727 311 014	4.00	100	Flow -X1	10	110	132	145	48	79
	727 311 015	4.00	100	Flow -X1	10	125	132	144	48	79
PPMTE060	727 311 017	6.00	150	Flow -X1	10	160	182	156	48	106

- For use with P51530-X1/-X2, 3-2536-X1/-X2, 3-8510-X1, 3-8512-X1, 3-2537-XC-X1, 3-2551-X1-XX/X2-XX
- Threaded outlet 1¼ NPSM
- Sensor length depends on installation fitting
- Suitable for backing flanges metric and inch
- Suitable for SDR 11 - SDR 17.6
- Delivered with profile O-ring
- Wafer can be used with other pipe materials

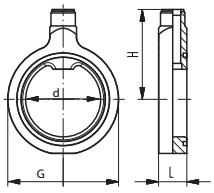

PP-H, Wafer Fitting, Metric and Inch (FKM gaskets)

Part No.	FKM Code No.	d [in.]	DN [mm]	Sensor Type	PN	d [mm]	H [mm]	D [mm]	L [mm]	L1 [mm]
PPMTF040	727 311 044	4.00	100	Flow -X1	10	110	132	145	48	79

- For use with P51530-X1/-X2, 3-2536-X1/-X2, 3-8510-X1, 3-8512-X1, 3-2537-XC-X1, 3-2551-X1-XX/X2-XX
- Threaded outlet 1¼ NPSM
- Sensor length depends on installation fitting
- Suitable for backing flanges metric and inch
- Suitable for SDR 11 - SDR 17.6
- Delivered with profile O-ring
- Wafer can be used with other pipe materials

Installation Fittings

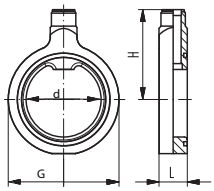

SYGEF Standard, Metric and Inch

Part No.	FKM Code No.	d [in.]	DN [mm]	Sensor Type	PN	d [mm]	H [mm]	D [mm]	L [mm]	L1 [mm]
SFMTF030	735 311 043	3.00	80	Flow -X1	10/16	90	141	102	48	69

- For use with P51530-X1, 3-2536-X1, 3-8510-X1, 3-8512-X1, 3-2537-XC-X1, 3-2551-X1-XX
- Threaded outlet 1¼ inch NPSM
- Sensor length depends on installation fitting
- Suitable for backing flanges metric and inch
- Delivered with profile O-ring
- Wafer can be used with other pipe materials

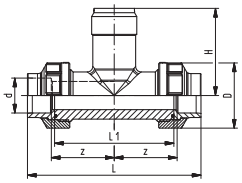

BSP PVC for Socket Fusion, BS Inch

Part No	FKM Code No.	EPR (EPDM) Code No.	d [in.]	d [mm]	DN [mm]	Sensor Type	PN	D [mm]	Z [mm]	L [mm]	L1 [mm]	H [mm]
PVAT007	721 310 337	721 310 307	3/4	25	20	Flow -X0, pH -XX	15	51	53	147	100	78
PVAT010	721 310 338	721 310 308	1	32	25	Flow -X0, pH -XX	15	58	58	164	110	81
PVAT012	721 310 339	721 310 309	1¼	40	32	Flow -X0, pH -XX	15	72	58	171	110	85
PVAT015	721 310 340	721 310 310	1½	50	40	Flow -X0, pH -XX	15	83	63	188	120	89
PVAT020	721 310 341	721 310 311	2	63	50	Flow -X0, pH -XX	15	100	68	211	130	95

- For use with P51530-X0, 3-2536-X0, 3-8510-X0, 3-8512-X0, 3-2537-XC-X0, 3-2551-X0-XX, 3-272X-XX, 3-273X-XX
- BSP - British Standard Pipe
- Threaded outlet 1¼ inch NPSM
- Sensor length depends on installation fitting

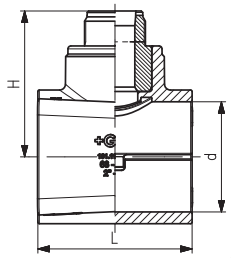

BSP PVC Clamp-on Saddle, BS Inch

Part No.	Code No.	d [in.]	DN [mm]	Sensor Type	d [mm]	PN	D [mm]	H [mm]	H1 [mm]	L [mm]
PVAS030	198 150 550	3	80	Flow -X0, pH -XX	90	15	39	105	225	105
PVAS040	198 150 551	4	100	Flow -X0, pH -XX	110	15	39	114	264	105
PVAS060	198 150 554	6	150	Flow -X1	160	15	39	156	339	120

- For use with P51530-X0/-X1, 3-2536-X0/-X1, 3-8510-X0/-X1, 3-8512-X0/-X1, 3-2537-XC-X0/-X1, 3-2551-X0-XX/-X1-XX, 3-272X-XX, 3-273X-XX
- BSP - British Standard Pipe
- Threaded outlet 1¼ inch NPSM
- Sensor length depends on installation fitting
- EPR (EPDM) Gasket

Alternative solution can be a PP saddle or wafer. Pipe size, pressure rating and chemical resistance need to be evaluated.

Installation Fittings

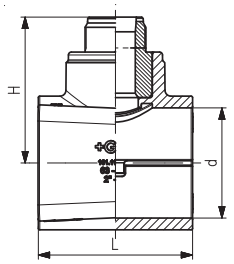

PVC Clamp-on Saddle, Metric

Part No.	Code No.	d [mm]	DN [mm]	Sensor Type	PN	H [mm]	L [mm]
PVMS025	198 150 538	75	65	Flow -X0, pH -XX	16	99	105
PVMS030	198 150 539	90	80	Flow -X0, pH -XX	16	105	105
PVMS040	198 150 540	110	100	Flow -X0, pH -XX	16	114	105
PVMS060	198 150 543	160	150	Flow -X1	16	156	120
PVMS080	198 150 545	225	200	Flow -X1	16	184	120

- For use with P51530-X0/-X1, 3-2536-X0/-X1, 3-8510-X0/-X1, 3-8512-X0/-X1, 3-2537-XC-X0/-X1, 3-2551-X0-XX/-X1-XX, 3-272X-XX, 3-273X-XX
- Threaded outlet 1¼ inch NPSM
- Sensor length depends on installation fitting
- Top saddle for solvent cement bonding
- Seal: Lip seal of EPR (EPDM)
- pH sensors can only be used up to 4 in. or DN100 pipe

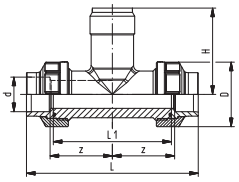

PVC for Socket Systems, Metric

Part No.	FKM Code No.	EPR (EPDM) Code No.	d [mm]	DN [mm]	Sensor Type	PN	D [mm]	Z [mm]	L [mm]	L1 [mm]	H [mm]
PVMT005	721 310 036	721 310 006	20	15	Flow -X0, pH -XX	16	43	48	128	90	76
PVMT007	721 310 037	721 310 007	25	20	Flow -X0, pH -XX	16	51	53	144	100	78
PVMT010	721 310 038	721 310 008	32	25	Flow -X0, pH -XX	16	58	58	160	110	81
PVMT012	721 310 039	721 310 009	40	32	Flow -X0, pH -XX	16	72	58	168	110	85
PVMT015	721 310 040	721 310 010	50	40	Flow -X0, pH -XX	16	83	63	188	120	89
PVMT020	721 310 041	721 310 011	63	50	Flow -X0, pH -XX	16	100	68	212	130	95

- For use with P51530-X0, 3-2536-X0, 3-8510-X0, 3-8512-X0, 3-2537-XC-X0, 3-2551-X0-XX, 3-272X-XX, 3-273X-XX
- To install this installation fitting in CPVC, PP-R and PE pipes. Replace the original union ends by CPVC, PP-R and PE union ends.
- Threaded outlet 1¼ inch NPSM
- Sensor length depends on installation fitting

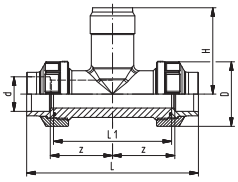

PP-H for Socket Fusion, Metric (PROGEF Standard)

Part No.	FKM Code No.	EPR (EPDM) Code No.	d [mm]	DN [mm]	Sensor Type	PN	D [mm]	Z [mm]	L [mm]	L1 [mm]	H [mm]
PPMT005	727 310 036	727 310 006	20	15	Flow -X0, pH -XX	10	48	50	128	90	76
PPMT007	727 310 037	727 310 007	25	20	Flow -X0, pH -XX	10	58	55	142	100	78
PPMT010	727 310 038	727 310 008	32	25	Flow -X0, pH -XX	10	65	60	156	110	81
PPMT012	727 310 039	727 310 009	40	32	Flow -X0, pH -XX	10	79	60	160	110	85
PPMT015	727 310 040	727 310 010	50	40	Flow -X0, pH -XX	10	91	65	176	120	89
PPMT020	727 310 041	727 310 011	63	50	Flow -X0, pH -XX	10	105	70	194	130	95

- For use with P51530-X0, 3-2536-X0, 3-8510-X0, 3-8512-X0, 3-2537-XC-X0, 3-2551-X0-XX, 3-272X-XX, 3-273X-XX
- To install this installation fitting in CPVC, PP-R and PE pipes. Replace the original union ends by CPVC, PP-R and PE union ends.
- Threaded outlet 1¼ inch NPSM
- Union end with fusion socket PP-H

Installation Fittings

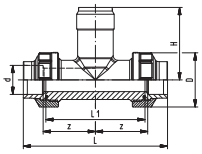

PVDF, Socket Fusion, Metric (SYGEF Standard)

Part No.	FKM Code No.	d [mm]	Sensor Type - Flow, pH/ORP	PN [Bar]	D [mm]	H [mm]	L [mm]	L1 [mm]	z [mm]
SFMT005	735 310 036	20	Flow -X0, pH -XX	16	45	76	128	90	50
SFMT007	735 310 037	25	Flow -X0, pH -XX	16	55	78	142	100	55
SFMT010	735 310 038	32	Flow -X0, pH -XX	16	62	81	156	110	60
SFMT012	735 310 039	40	Flow -X0, pH -XX	16	75	85	160	110	60
SFMT015	735 310 040	50	Flow -X0, pH -XX	16	84	89	176	120	65
SFMT020	735 310 041	63	Flow -X0, pH -XX	16	101	95	194	130	70

- For use with P51530-X0, 3-2536-X0, 3-8510-X0, 3-8512-X0, 3-2537-XC-X0, 3-2551-X0-XX, 3-272X-XX, 3-273X-XX
- To install this installation fitting in CPVC, PP-R and PE pipes. Replace the original union ends by CPVC, PP-R and PE union ends.
- Socket fusion equipment is required to install PVDF union tees
- FKM O-rings
- Sensor length depends on installation fitting

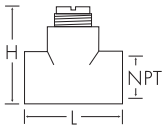

Carbon Steel Threaded Tees with NPT Threads

Part No.	Code No.	Size [in.]	Sensor Type	L [in.]	H [in.]
CS4T005	198 801 459	0.50	Flow -X0, pH -XX	3.6	4.0
CS4T007	198 801 460	0.75	Flow -X0, pH -XX	3.6	4.2
CS4T010	198 801 461	1.00	Flow -X0, pH -XX	3.6	4.2
CS4T012	198 801 462	1.25	Flow -X0, pH -XX	3.8	4.5
CS4T015	198 801 419	1.50	Flow -X0, pH -XX	4.1	4.8
CS4T020	198 801 463	2.00	Flow -X0, pH -XX	4.9	5.3

- For use with P51530-X0, 3-2536-X0, 3-8510-X0, 3-8512-X0, 3-2537-XC-X0, 3-2551-X0-XX, 3-272X-XX, 3-273X-XX
- PVDF insert - all sizes
- For use with SCH 40 metal pipe (ASTM)
- PTFE wetted material. Contact factory for available options.

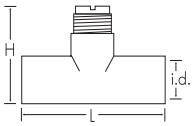

Copper Sweat-on Tee with PVDF Insert

Part No.	Code No.	Size [in.]	Sensor Type	L [in.]	H [in.]	i.d. [in.]
CUKT005	198 801 687	0.50	Flow -X0, pH -XX	3.15	3.30	0.62
CUKT007	198 801 688	0.75	Flow -X0, pH -XX	2.96	3.52	0.87
CUKT010	198 801 689	1.00	Flow -X0, pH -XX	3.00	3.80	1.12
CUKT012	198 801 690	1.25	Flow -X0, pH -XX	4.16	4.12	1.38
CUKT015	198 801 691	1.50	Flow -X0, pH -XX	4.50	4.34	1.63
CUKT020	198 801 418	2.00	Flow -X0, pH -XX	5.50	4.86	2.11

- For use with P51530-X0, 3-2536-X0, 3-8510-X0, 3-8512-X0, 3-2537-XC-X0, 3-2551-X0-XX, 3-272X-XX, 3-273X-XX
- No insert up to 1 in., over 1 in. - PVDF insert
- For use with copper pipe (SCH K)
- PTFE wetted material. Contact factory for available options.

Installation Fittings

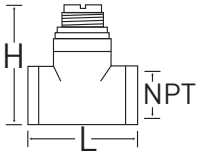

Galvanized Iron Threaded Tee with NPT Threads and PVDF Insert

Part No.	Code No.	Size [in.]	Sensor Type	NPT [in.]	L [in.]	H [in.]
IR4T010	198 801 421	1.00	Flow -X0, pH -XX	1.00	3.4	4.1
IR4T012	198 801 422	1.25	Flow -X0, pH -XX	1.25	3.56	4.34
IR4T015	198 801 423	1.50	Flow -X0, pH -XX	1.50	3.75	4.67
IR4T020	198 801 424	2.00	Flow -X0, pH -XX	2.00	3.90	5.05

- For use with P51530-X0, 3-2536-X0, 3-8510-X0, 3-8512-X0, 3-2537-XC-X0, 3-2551-X0-XX, 3-272X-XX, 3-273X-XX
- PVDF insert - all sizes
- For use with SCH 40 metal pipe (ASTM)
- PTFE wetted material. Contact factory for available options.

0.50"- 1.00"

1.25" - 2.00"

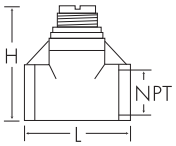

316 SS (1.4401) Threaded Tees with NPT Threads with PVDF Insert

Part No.	Code No.	Size [in.]	Sensor Type	L [in.]	H [in.]
CR4T005	198 801 554	0.50	Flow -X0, pH -XX	3.6	4.0
CR4T007	198 801 555	0.75	Flow -X0, pH -XX	3.6	4.2
CR4T010	198 801 556	1.00	Flow -X0, pH -XX	3.6	4.2
CR4T012	198 801 783	1.25	Flow -X0, pH -XX	3.8	4.5
CR4T015	198 801 784	1.50	Flow -X0, pH -XX	4.1	4.8
CR4T020	198 801 785	2.00	Flow -X0, pH -XX	4.9	5.3

- For use with P51530-X0, 3-2536-X0, 3-8510-X0, 3-8512-X0, 3-2537-XC-X0, 3-2551-X0-XX, 3-272X-XX, 3-273X-XX
- PVDF insert - all sizes
- For use with SCH 40 metal pipe (ASTM)
- PTFE wetted material. Contact factory for available options.

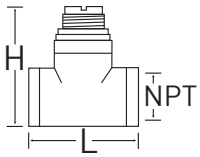

Brass Threaded Tee with NPT Threads and PVDF Insert

Part No.	Code No.	Size [in.]	Sensor Type	NPT [in.]	L [in.]	H [in.]
BR4T010	198 801 770	1.00	Flow -X0, pH -XX	1.00	3.36	4.09
BR4T012	198 801 771	1.25	Flow -X0, pH -XX	1.25	3.42	4.42
BR4T015	198 801 772	1.50	Flow -X0, pH -XX	1.50	3.46	4.70
BR4T020	198 801 773	2.00	Flow -X0, pH -XX	2.00	3.68	5.19

- For use with P51530-X0, 3-2536-X0, 3-8510-X0, 3-8512-X0, 3-2537-XC-X0, 3-2551-X0-XX, 3-272X-XX, 3-273X-XX
- PVDF insert - all sizes
- For use with SCH 40 metal pipe (ASTM)
- PTFE wetted material. Contact factory for available options.

Installation Fittings

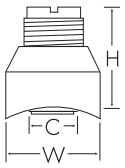

Carbon Steel Weld-on Weldolets for use with SCH 40 Metal Pipe (ASTM)

Part No.	Code No.	Size [in.]	Sensor Type	W [in.]	H [in.]	C [in.]
CS4W025	198 801 464	2.50	Flow -X0, pH -XX	2.60	2.48	1.31
CS4W030	198 801 557	3.00	Flow -X0, pH -XX	2.60	2.47	1.31
CS4W040	198 801 552	4.00	Flow -X0, pH -XX	2.60	2.45	1.31
CS4W050	198 801 465	5.00	Flow -X1	3.50	3.24	2.10
CS4W060	198 801 553	6.00	Flow -X1	3.50	3.11	2.10
CS4W080	198 801 574	8.00	Flow -X1	3.50	2.88	2.10
CS4W100	198 801 575	10.0	Flow -X2	3.50	5.63	2.10
CS4W120	198 801 576	12.0	Flow -X2	3.50	5.40	2.10

- For use with P51530-X0/-X1/-X2, 3-2536-X0/-X1/-X2, 3-8510-X0/-X1, 3-8512-X0/-X1, 3-2537-XC-X0/-X1, 3-2551-X0-XX/-X1-XX/-X2-XX, 3-272X-XX, 3-273X-XX
- C - Clearance dimension
- Up to 8 in. - PVDF insert, over 8 in. - PVC insert
- PTFE wetted material. Contact factory for available options.

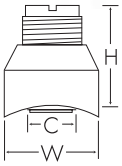

Brass Brazolet with PVDF Insert for use with Copper Pipe (SCH 40 ASTM)

Part No.	Code No.	Size [in.]	Sensor Type	W [in.]	H [in.]	C [in.]
BR4B025	198 801 794	2.50	Flow -X0, pH -XX	2.50	2.48	1.31
BR4B030	198 801 795	3.00	Flow -X0, pH -XX	2.50	2.47	1.31
BR4B040	198 801 796	4.00	Flow -X0, pH -XX	2.50	2.45	1.31
BR4B050	198 801 797	5.00	Flow -X1	3.50	3.24	2.10
BR4B060	198 801 798	6.00	Flow -X1	3.50	3.11	2.10
BR4B080	198 801 799	8.00	Flow -X1	3.50	2.88	2.10
BR4B100	198 801 800	10.0	Flow -X2	3.50	5.63	2.10
BR4B120	198 801 801	12.0	Flow -X2	3.50	5.40	2.10

- For use with P51530-X0/-X1/-X2, 3-2536-X0/-X1/-X2, 3-8510-X0/-X1, 3-8512-X0/-X1, 3-2537-XC-X0/-X1, 3-2551-X0-XX/-X1-XX/-X2-XX, 3-272X-XX, 3-273X-XX
- C - Clearance dimension
- Up to 8 in. - PVDF insert, over 8 in. - PVC insert
- PTFE wetted material. Contact factory for available options.

Installation Fittings

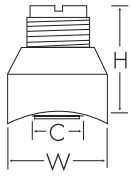

316 SS (1.4401) Weldolets with PVDF Insert for use with SCH 40 Metal Pipe (ASTM)

Part No.	Code No.	Size [in.]	Sensor Type	W [in.]	H [in.]	C [in.]
CR4W025	198 801 786	2.50	Flow -X0, pH -XX	2.50	2.48	1.31
CR4W030	198 801 787	3.00	Flow -X0, pH -XX	2.50	2.47	1.31
CR4W040	198 801 788	4.00	Flow -X0, pH -XX	2.50	2.45	1.31
CR4W050	198 801 789	5.00	Flow -X1	3.50	3.24	2.10
CR4W060	198 801 790	6.00	Flow -X1	3.50	3.11	2.10
CR4W080	198 801 791	8.00	Flow -X1	3.50	2.88	2.10
CR4W100	198 801 792	10.0	Flow -X2	3.50	5.63	2.10
CR4W120	198 801 793	12.0	Flow -X2	3.50	5.40	2.10

- For use with P51530-X0/-X1/-X2, 3-2536-X0/-X1/-X2, 3-8510-X0/-X1, 3-8512-X0/-X1, 3-2537-XC-X0/-X1, 3-2551-X0-XX/-X1-XX/-X2-XX, 3-272X-XX, 3-273X-XX
- Up to 8 in. - PVDF insert, over 8 in. - PVC insert
- C - Clearance dimension
- PTFE wetted material. Contact factory for available options.

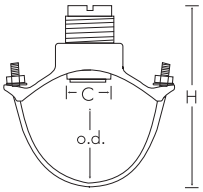

Iron Strap-on Saddle for use with SCH 80 Metal Pipe (ASTM)

Part No.	Code No.	Size [in.]	Sensor Type	H [in.]	o.d. min [in.]	o.d. max [in.]	C [in.]
IR8S020	198 801 425	2.00	Flow -X0, pH -XX	5.5	2.35	2.56	1.44
IR8S025	198 801 426	2.50	Flow -X0, pH -XX	5.5	2.44	2.91	1.44
IR8S030	198 801 427	3.00	Flow -X0, pH -XX	6.5	2.97	3.54	1.44
IR8S040	198 801 420	4.00	Flow -X0, pH -XX	7.5	4.40	4.55	1.44
IR8S050	198 801 429	5.00	Flow -X1	9.0	5.00	5.63	2.25
IR8S060	198 801 430	6.00	Flow -X1	10.5	5.94	6.70	2.25
IR8S080	198 801 431	8.00	Flow -X1	12.0	7.69	8.72	2.25
IR8S100	198 801 432	10.0	Flow -X2	18.0	10.64	12.12	2.25
IR8S120	198 801 433	12.0	Flow -X2	20.0	12.62	14.32	2.25

- For use with P51530-X0/-X1/-X2, 3-2536-X0/-X1/-X2, 3-8510-X0/-X1, 3-8512-X0/-X1, 3-2537-XC-X0/-X1, 3-2551-X0-XX/-X1-XX/-X2-XX, 3-272X-XX, 3-273X-XX
- C - Clearance dimension
- Up to 8 in. - PVDF insert, over 8 in. - PVC insert
- Buna O-ring
- Larger sizes may be available and PTFE wetted material. Contact factory.

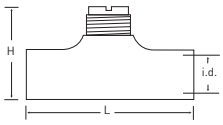

Fiberglass Glue-on Tees

Part No.	Code No.	Size [in.]	Sensor Type	L [in.]	H [in.]	i.d. [in.]
FPT015	159 000 446	1.50	Flow -X0, pH -XX	5.5	4.7	1.92
FPT020	159 000 447	2.00	Flow -X0, pH -XX	7.7	8.0	2.38

- For use with P51530-X0, 3-2536-X0, 3-8510-X0, 3-8512-X0, 3-2537-XC-X0, 3-2551-X0-XX, 3-272X-XX, 3-273X-XX
- PVDF insert - all sizes
- PTFE wetted material. Contact factory for available options

Installation Fittings

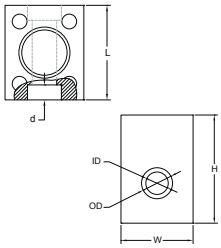

Metalex Socket Weld Mini-Tap (1.4401)

Part No.	Code No.	DN [mm]	Size [in.]	Sensor Type	o.d [mm]	d [mm]	i.d [mm]	o.d [in.]	d [in.]	i.d. [in.]	L [in.]	W [in.]	H [in.]
P526-2005	198 840 501	15	0.50	P525-1, -1S	21.8	9.7	15.8	0.85	0.38	0.622	2.4	2.0	3.0
P526-2007	198 840 502	20	0.75	P525-1, -1S	27.2	12.7	20.9	1.06	0.50	0.824	2.4	2.0	3.0
P526-2010	198 840 503	25	1.00	P525-1, -1S	33.8	12.7	26.7	1.33	0.50	1.05	2.4	2.0	3.0

- For use with P525-1 and P525-1S only
- For use with SS pipe

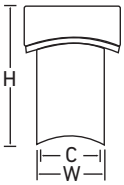

Metalex Weld-on Mini-Tap (1.4401)

Part No.	Code No.	Size [in.]	Sensor Type	W [in.]	H [in.]	C [in.]
P526-2012	159 000 494	1.25	P525-2, -2S	1.66	2.25	1.26
P526-2015	198 840 506	1.50	P525-2, -2S	1.66	2.20	1.26
P526-2020	159 000 495	2.00	P525-2, -2S	1.66	2.17	1.26
P526-2025	159 000 496	2.50	P525-2, -2S	1.66	2.10	1.26
P526-2030	159 000 497	3.00	P525-2, -2S	1.66	2.00	1.26
P526-2040	159 000 498	4.00	P525-2, -2S	1.66	1.95	1.26
P526-2050	159 000 499	5.00	P525-2, -2S	1.66	1.83	1.26
P526-2060	159 000 500	6.00	P525-2, -2S	1.66	1.75	1.26
P526-2080	159 000 501	8.00	P525-2, -2S	1.66	1.56	1.26
P526-2100	159 000 502	10.00	P525-2, -2S	1.66	1.35	1.26
P526-2120	159 000 503	12.00	P525-2, -2S	1.66	1.15	1.26

- For use with P525-2 and P525-2S only
- For use with SS pipe
- Gasket Klinger C4401 Thermoseal

Installation Fittings

Electrofusion for PE pipes: Transition Saddles with Stainless 1¼ Inch Outlet

Code No.	Size [in.]	Sensor Type	L [in.]	H [in.]	d [in.]
10004673	2.0	2552-2	3.6	3.18	N/A
10004686	3.0	2552-2	4.6	3.18	N/A
10004700	4.0	2552-2	6.26	3.8	N/A
10004717	6.0	2552-2	8.68	4.96	N/A
10007761	8.0	2552-2	5.92	2.96	N/A
Special request	10.0	2552-2	Call	Call	N/A
Special request	12.0	2552-2	Call	Call	N/A

1½ Inch Outlet

10004676	2.0	2552-3, 2540-XX, 3719-11	3.6	3.18	N/A
10004689	3.0	2552-3, 2540-XX, 3719-11	4.6	3.18	N/A
10004703	4.0	2552-3, 2540-XX, 3719-11	6.26	3.8	N/A
10004720	6.0	2552-3, 2540-XX, 3719-11	8.68	4.96	N/A
10004743	8.0	2552-3, 2540-XX, 3719-11	5.92	2.96	N/A
Special request	10.0	2552-3, 2540-XX, 3719-11	Call	Call	N/A
Special request	12.0	2552-3, 2540-XX, 3719-11	Call	Call	N/A

- Transition saddle with 1¼ FNPT branch/outlet
- Transition saddle with 1½ FNPT branch/outlet
- These fittings are only available from your local Georg Fischer sales office

ASTM/Metric Pipe Saddles >>

Schedule 40 and 80

The Signet IR4S and IR8S Strap-on Iron Saddles are especially recommended where large taps are required.

The Signet Strap-on Iron Saddles have a ductile iron body per ASTM A536. The saddles have an outlet for the service connection that allows the NPT thread of the 2552 Magmeter or 3719 pH/ORP Wet-Tap assembly to be tapped into it.

The gasket is made of Nitrile (Buna) and NSF 61 listed and has a temperature range of -29 °C to 82 °C (-20 °F to 180 °F).

SAP Material Number 150 301 006

IRXXXXXX

Iron Service Saddle	
Pipe Schedule - Iron Service Saddle	
4S	Schedule 40 pipe
8S	Schedule 80
Pipe Size - OD/Wall thickness	
140	14 in. Pipe (OD = 12.62 in. to 14.32 in./320 to 363 mm)
160	16 in. Pipe (OD = 15.95 in. to 17.25 in./405 to 438 mm)
180	18 in. Pipe (OD = 17.40 in. to 18.00 in./442 to 478.5 mm)
200	20 in. Pipe (OD = 19.25 in. to 20.00 in./489 to 508 mm)
240	24 in. Pipe (OD = 23.75 in. to 24.50 in./603 to 622 mm)
Inlet Size	
-	with insert for flow sensor
A	1¼ in. NPT - use with 3-2552-2X or 3519
B	1½ in. NPT - use with 3-2552-3X or 3519

Example Part Number

IR4S180A

Iron Strap-on saddle, schedule 40 pipe, for 18 inch pipe 1¼ inch NPT inlet.

Added customer value:
GF Signet will preassemble your SS or Brass ball valve to the saddle of your choice. Prior to shipping, GF Signet will apply PTFE sealant tap to the nipple and ball valve and also the 2552 of your choice.

The customer will only have to install the saddle assembly onto the pipe and thread in the Magmeter. Cost of this service would be the standard list price of the Magmeter, saddle and ball valve assembly less your standard discount and a NET I-Lab charge to do the assembly work.

Refer to the Signet Measurement and Control Product Catalog for additional 2552 information.

3-2552-X1-X-XXX(X)-BV-X-IRX

Magmeter Process Connection	
2	Magmeter - 1¼ in. NPT process connector
3	Magmeter - 1½ in. NPT process connector
–	**Cable type**
A	Fixed cable
B	Water tight sensor connector
–	**Cable length**
025	25 ft standard length for "A" version
050	50 ft
075	75 ft
100	100 ft
CUST	Defined by customer
–	**Ball valve material**
BV-S	Ball Valve Stainless Steel
BV-B	Ball Valve Brass
–	**Saddle**
IRX	Choose any A or B type saddle

Example Part Number

3-2552-21-A-050-BV-S-IRX

Magmeter, 1 ¼ in. NPT process connection, with digital (S^3L) output, 50 feet of cable, a Stainless Steel ball valve and saddle.

Special order products may not meet all of the specifications of the standard sensor assemblies.

ASTM/Metric Pipe Weldolets >>

Schedule 40

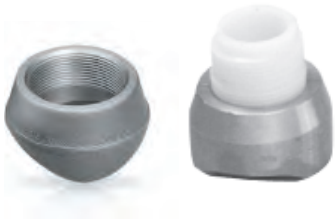

A and B

The A and B versions of the Weld-on Weldolet allow easy installation of the 3-2552 and 3-3719 pH/ORP Wet-Tap assembly into metal piping systems. The C version allows standard insertion sensors to be used. These products are available in Brass, Stainless Steel and Carbon Steel.

Smaller Weld-on Weldolet sizes are available.

WARNING:
Verify the pipe ID, OD, wall thickness and the sensor to be used in the application. Contact GF Special products for assistance in verifying proper system selection.

SAP Material Number 150 301 006

Weld-on Weldolet

Threadolet Material	
CS4	Carbon Steel, Schedule 40
BR4	Brass, Schedule 40
CR4	Stainless Steel, Schedule 40

Special Feature	
140	14 in. Pipe - Call for metric size pipes
160	16 in. Pipe - Call for metric size pipes
180	18 in. Pipe - Call for metric size pipes
200	20 in. Pipe - Call for metric size pipes
240	24 in. Pipe - Call for metric size pipes

Inlet Size	
-	Insert for flow sensor
A	1¼ in. NPT (2552-2 or 3519)
B	1½ in. NPT (2552-3 or 3519)

Example Part Number

CS4140A

Threaded weldolet, carbon steel, schedule 40, 14 in. pipe, 1¼ in. NPT inlet.

Shipping Weight	
0.50 kg (approx.)	1.10 lb (approx.)

Special order products may not meet all of the specifications of the standard sensor assemblies.

Fitting Insert Reference

The following inserts can be used to replace inserts in Signet fittings

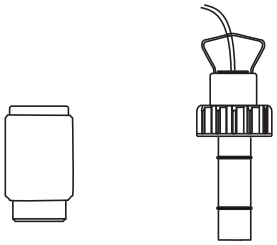

Sensor Plug

Fitting	Insert Part No.	Description
Fitting Accessories		
P31515-0V200	159 000 459	Pipe Adapter Insert, PVDF
P31515-0C200	159 000 631	Pipe Adapter Insert, CPVC
P31515-0P200	159 000 630	Pipe Adapter Insert, PVC
P31520-1V	159 000 460	Pipe Adapter Insert, PVDF
P31520-2P	159 000 461	Pipe Adapter Insert, PVC
P31536	198 840 201	Sensor Plug, Polypro
P31671-1	159 000 465	Insert, PVDF 1½ in.

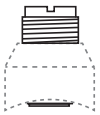

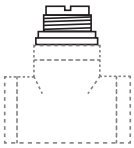

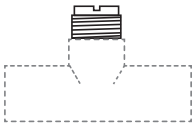

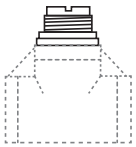

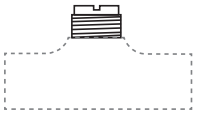

Fitting	Insert Part No.	Description
Brazolet Fittings		
BR4B025	P31515-0V200	Brazolet, Brass
BR4B030	P31515-0V200	Brazolet, Brass
BR4B040	P31515-0V200	Brazolet, Brass
BR4B050	P31520-1V	Brazolet, Brass
BR4B060	P31520-1V	Brazolet, Brass
BR4B080	P31520-1V	Brazolet, Brass
BR4B100	P31520-2P	Brazolet, Brass
BR4B120	P31520-2P	Brazolet, Brass
Tee Fittings		
BR4T010	P31515-0V200	Tee, Brass
BR4T012	P31515-0V200	Tee, Brass
BR4T015	P31515-0V200	Tee, Brass
BR4T020	P31515-0V200	Tee, Brass
CUKT005	Not applicable	Tee, Copper
CUKT007	Not applicable	Tee, Copper
CUKT010	Not applicable	Tee, Copper
CUKT012	P31515-0V200	Tee, Copper
CUKT015	P31671-1	Tee, Copper
CUKT020	P31520-1V	Tee, Copper
CR4T005	P31515-0V200	Tee, SS
CR4T007	P31515-0V200	Tee, SS
CR4T010	P31515-0V200	Tee, SS
CR4T012	P31515-0V200	Tee, SS
CR4T015	P31671-1	Tee, SS
CR4T020	P31520-1V	Tee, SS
CS4T005	P31515-0V200	Tee, Carbon Steel
CS4T007	P31515-0V200	Tee, Carbon Steel
CS4T010	P31515-0V200	Tee, Carbon Steel
CS4T012	P31515-0V200	Tee, Carbon Steel
CS4T015	P31515-0V200	Tee, Carbon Steel
CS4T020	P31515-0V200	Tee, Carbon Steel
FPT015	P31515-0V200	Tee, Fiberglass
FPT020	P31515-0V200	Tee, Fiberglass

! FOR YOUR SAFETY: Always confirm the chemical compatibility and the maximum pressure/temperature specifications for fitting and sensor selection prior to purchase. Failure to do so may result in property damage and/or serious personal injury.

Fitting Insert Reference

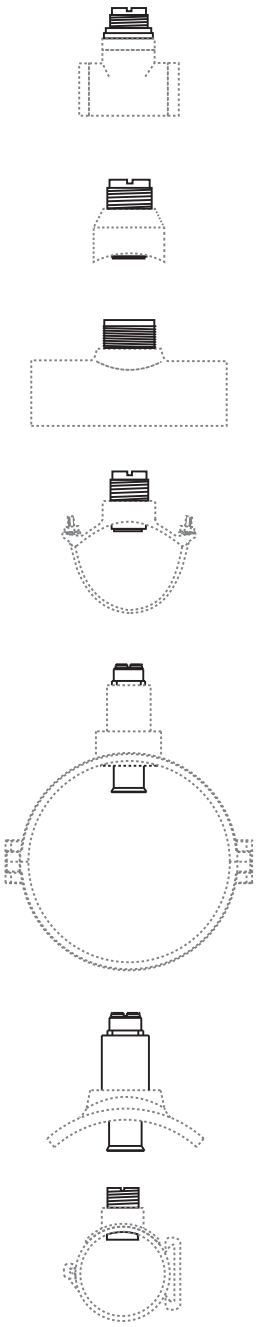

Fitting	Insert Part No.	Description
Tee Fittings		
IR4T010	P31515-0V200	Tee, Iron
IR4T012	P31515-0V200	Tee, Iron
IR4T015	P31515-0V200	Tee, Iron
IR4T020	P31515-0V200	Tee, Iron
Weldolet Fittings		
CR4W025	P31515-0V200	Weldolet, SS
CR4W030	P31515-0V200	Weldolet, SS
CR4W040	P31515-0V200	Weldolet, SS
CR4W050	P31520-1V	Weldolet, SS
CR4W060	P31520-1V	Weldolet, SS
CR4W080	P31520-1V	Weldolet, SS
CR4W100	P31520-2P	Weldolet, SS
CR4W120	P31520-2P	Weldolet, SS
CS4W025	P31515-0V200	Weldolet, Carbon Steel
CS4W030	P31515-0V200	Weldolet, Carbon Steel
CS4W040	P31515-0V200	Weldolet, Carbon Steel
CS4W050	P31520-1V	Weldolet, Carbon Steel
CS4W060	P31520-1V	Weldolet, Carbon Steel
CS4W080	P31520-1V	Weldolet, Carbon Steel
CS4W100	P31520-2P	Weldolet, Carbon Steel
CS4W120	P31520-2P	Weldolet, Carbon Steel
CR4T005		
Saddle Fittings		
IR8S020	P31515-0V200	Saddle, Iron
IR8S025	P31515-0V200	Saddle, Iron
IR8S030	P31515-0V200	Saddle, Iron
IR8S040	P31515-0V200	Saddle, Iron
IR8S050	P31520-1V	Saddle, Iron
IR8S060	P31520-1V	Saddle, Iron
IR8S080	P31520-1V	Saddle, Iron
IR8S100	P31520-2P	Saddle, Iron
IR8S120	P31520-2P	Saddle, Iron
PV8S020	Not applicable	Saddle, PVC
PV8S025	Not applicable	Saddle, PVC
PV8S030	Not applicable	Saddle, PVC
PV8S040	Not applicable	Saddle, PVC
PV8S060	Not applicable	Saddle, PVC
PV8S080	Not applicable	Saddle, PVC
PV8S100	Not applicable	10" Glue-on Saddle, PVC
PV8S120	Not applicable	12" Glue-on Saddle, PVC

Ordering Notes

1. If insert is intended for use with Signet installation fittings, specify fitting part number at the time of purchase.

2. If insert is not for use with Signet installation fittings, specify the following at the time of purchase:
   - Outside diameter (o.d.) of pipe
   - Thickness of pipe
   - Dimension from top of pipe to top of installation fitting when installed.

Instrument Accessories - Junction Boxes

	Mfr. Part No.	Code	Description	Compatiblity
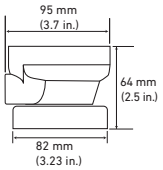	3-8050	**159 000 184**	The Universal Mount Kit mounts a 9900 field mount instrument onto a wall, pipe, or tank. Includes: transmitter base, universal mounting plate and bracket.	• 9900
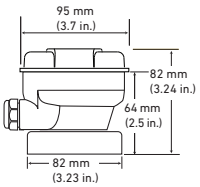	3-8050-1	**159 000 753**	The Universal Mount Junction Box contains two terminal blocks that enable cable extensions for pH, ORP, flow, temperature, pressure, and conductivity sensors/electrodes. This kit mounts on a wall, pipe, or tank. Includes: top cover, transmitter base, universal mounting plate and bracket, liquid tight connector kit.	Sensors/Electrodes: • 2751-1 • 2751-3 • 2751-4 • 2839-2842 (-1, -1D versions) • 2350 • 2450 ! DO NOT extend resistivity electrode cable when resistivity value is above 10 MΩ
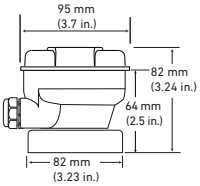	3-8050-2	**159 000 754**	The pH/ORP Universal Mount Junction Box contains two terminal blocks that enable cable extension of pH or ORP sensors. It features an EasyCal board for simple, push-button pH or ORP calibration. This kit mounts on a wall, pipe, or tank. Includes: top cover, transmitter base, universal mounting plate and bracket, liquid tight connector kit.	ONLY • 2751-1 • 2751-3 • 2751-4
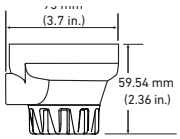	3-8051 3-8051-1 3-8051-2	**159 000 187** **159 001 755** **159 001 756**	The Integral mounting kit is designed to mount a field mount instrument directly on top of a flow sensor. Includes: transmitter base locking nut.	Instruments • 8150-1 • 9900 Sensors: • 8510-P0, -P1, -T0, or -V0 • 8512-P0, -P1, -T0, or -V0
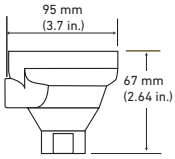	3-8052	**159 000 188**	3/4 in. Integral Mount Kit is designed to mount a ProcessPro® field mount instrument directly on top of a conductivity/resistivity, temperature, or pressure or level sensor. Includes: transmitter base, sensor adaptor.	Instruments: • 9900 Sensors/Electrodes: • 2839-2842 (-1, -1D versions) • 2350 • 2450
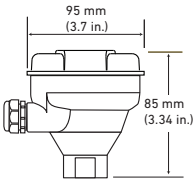	3-8052-1	**159 000 755**	3/4 in. NPT mount Junction Box contains two terminal blocks that enable cable extension for pH, ORP sensors Includes: top cover, transmitter base, sensor adaptor, liquid tight connector kit.	Sensors/Electrodes: • 2751-1 • 2751-3 • 2751-4 • 2839-2842 (-1, -1D versions) • 2350 • 2450
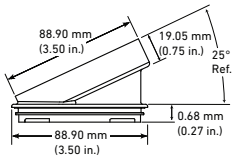	3-8052-2	**159 000 756**	¾ in. NPT mount Junction Box contains two terminal blocks that enable cable extension for pH or ORP sensors. It features an EasyCal board for simple, push-button pH or ORP calibration. This kit mounts on a wall, pipe, or tank. Includes: top cover, transmitter base, sensor adaptor, liquid tight connector kit.	Sensors/Electrodes: • 2751-1 • 2751-3 • 2751-4
	3-9900.396	**159 001 701**	The Angle Adjustment Adapter kit is for additional wiring clearance or to adjust the mounting angle of the instrument. Includes: transition adaptor and O-ring.	Junction Boxes • 8050 • 8050-1 • 8050-2 • 8051 • 8052 • 8052-1 The angle adapter is required when using a conductivity module on a 9900-1 field mount

Instrument Accessories and Replacement Parts

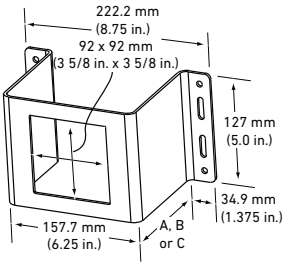

A = 165.1 mm/5 in. (3-0000.596)
B = 228.6 mm/6.5 in. (3-0000.596-1)
C = 228.6 mm/9 in. (3-0000.596-2)

Heavy Duty Wall Mount Brackets
(3-0000.596, 3-0000.596-1, 3-0000.596-2)

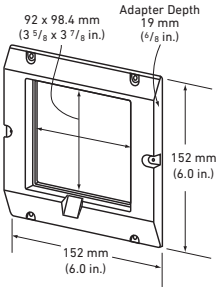

5 x 5 Adapter Kit
3-5000.399

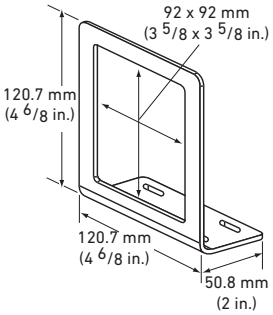

Mounting Bracket
3-5000.598

A = 38.1 mm/1.5 in. (3-5000.395)
B = 57.2 mm/2.25 in. (3-8050.395)

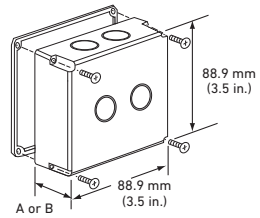

Splashproof Rear Cover
3-8050.395

Instrument Mounting

Note: Not all accessories shown pictorially.

Mfr. Part No.	Code	Description	Compatibility
3-0000.596	**159 000 641**	Heavy Duty Wall Mount Bracket	For all instruments (panel mount version)
3-0000.596-2	**159 000 893**	Heavy Duty Wall Mount Bracket when used with back cover 3-8050.395	8900
3-5000.399	**198 840 224**	5" x 5" Adapter Kit	8900
3-5000.598	**198 840 225**	Mounting Bracket	all instruments (panel mount version)
3-8050	**159 000 184**	Universal Mount Kit	9900
3-8050.575		Metal Frame with Clips	8000 series
3-8050.392	**159 000 640**	¼ DIN Retrofit Adapter	8900
3-8050.395	**159 000 186**	Splashproof Rear Cover	8900
3-8051	**159 000 187**	Flow Sensor Integral Mount Kit	9900
3-8052	**159 000 188**	¾ in. Integral Mount Kit	9900

Liquid Tight Connector Kits (for all instruments and junction boxes.)

Mfr. Part No.	Code	Description	Compatibility
3-9000.392	**159 000 368**	Liquid Tight Connector Kit for Rear Cover (includes 3 connectors)	All instruments
3-9000.392-1	**159 000 839**	Liquid Tight Connector Kit, NPT (1 pc.)	All instruments
3-9000.392-2	**159 000 841**	Liquid Tight Connector Kit, PG13.5 (1 pc.)	All instruments

Liquid Tight Connectors
3-9000.392
3-9000.392-1
3-9000.392-2

Instrument Accessories and Replacement Parts

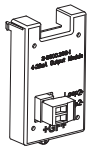

4 to 20 mA Output Module (3-9900.398-1)

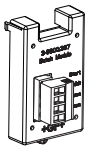

Batch Module (3-9900.397)

H COMM Module (3-9900.395)

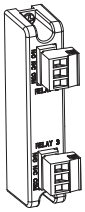

Relay Module (3-9900.393)

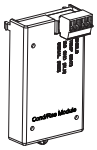

Direct Cond./ Resist. Module (3-9900.394)

Modbus Module (3-9900.270-MX)

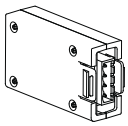

Single Channel Direct Cond./Res. Module (3-9950.394-1

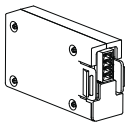

Dual Channel Module (3-9950.398-2)

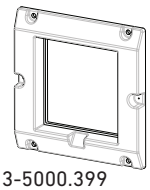

3-5000.399

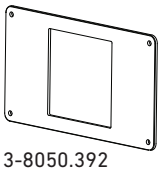

3-8050.392

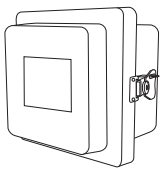

150 300 351

Miscellaneous Instrument Accessories and Replacement Parts

Mfr. Part No.	Code	Description	Compatibility
3-8900.561	**159 000 919**	Front Face Panel Gasket	8900
3-8900.602	**159 000 904**	2-terminal plug	8900
3-8900.604	**159 000 903**	4-terminal plug	8900
3-8900.606	**159 000 937**	6-terminal plug	8900
3-8900.614	**159 000 902**	14-terminal plug	8900
3-9900.390	**159 001 714**	Standard Connector Kit, right angle	9900
3-9900.391	**159 001 715**	Optional Connector Kit, In-line	9900
3-9900.392	**150 300 351**	Wall Mount Accessory Kit	9900
3-9000.392-1	**159 000 839**	Liquid Tight Connector Kit, NPT (1 pc.)	9900
3-9900.393	**159 001 698**	Relay Module	9900
3-9900.394	**159 001 699**	Direct Conductivity/ Resistivity Module	9900
3-9900.395	**159 001 697**	H COMM Module	9900
3-9900.396	**159 001 701**	Angle Adjustment Adapter Kit	9900
3-9900.397	**159 310 163**	Batch Module	9900 (Generation III or later), 9900-1BC
3-9900.398-1	**159 001 784**	4 to 20 mA Output Module	9900
3-9900.270-M2	**159 200 121**	Modbus Module with Terminal Block Assembly (Panel Mount Only)	9900
3-9900.270-M3	**159 200 122**	Modbus Module with M12 Connector Assembly (Field Mount Only)	9900
3-9900.270-M4	**159 200 128**	Modbus Module with Wire Cable Assembly	9900
3-9950.394-1	**159 001 846**	Single Channel Direct Conductivity/ Resistivity Module	9950
3-9950.398-2	**159 001 848**	Dual Channel 4 to 20 mA Current Loop Output Module	9950

Miscellaneous Instrument Accessories and Replacement Parts

Mfr. Part No.	Code	Description	Compatibility
3-5000.399	**198 840 224**	5 x 5 inch Retrofit Adapter	9950
3-8050.392	**159 000 640**	CR200 ¼ DIN Retrofit Adapter	9950
3-8050.396	**159 000 617**	RC Filter Kit (for relay use), 2 per kit with inductive loads	9950
3-8058-1	**159 000 966**	i-Go® Signal Converter, wire-mount	9950
3-9950.391	**159 310 278**	Connector Kit, In-Line, 9950 Transmitter	9950
3-9950.392	**159 310 279**	Relay Module Connector Kit, 9950 Transmitter	9950
3-9900.392	**159 001 700**	Wall Mount Enclosure Kit **(Order number is 150 300 351)**	9950
3-9000.392-1	**159 000 839**	Liquid Tight Connector Kit, NPT (1 pc.)	9950

Flow Sensor Accessories and Replacement Parts

Note: Not all accessories shown pictorially.

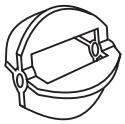

Rotor
(pin not included)

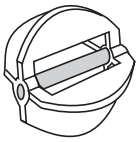

Sleeved Rotor
(pin not included)

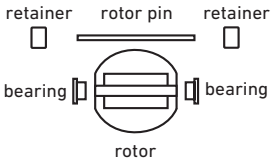

Rotor Kit (P52509)

Rotor Pin

Rotors and Rotor Kits

Mfr. Part No.	Code	Description	Compatibility
M1538-2	**198 801 181**	Rotor only, PVDF Black	515
M1538-4	**198 820 018**	Rotor, ETFE	515
P51550-3	**198 820 043**	Rotor and Pin, PVDF Natural	515
3-0515.322-1	**198 820 059**	Sleeved Rotor, PVDF Black	515
3-0515.322-2	**198 820 060**	Sleeved Rotor, PVDF Natural	515
3-0515.322-3	**198 820 017**	Sleeved Rotor, ETFE	515
3-2000.390	**159 000 248**	Replacement Rotor Kit	2000
3-2507.080-2	**198 801 550**	Rotor	2507
P52509	**198 801 501**	Rotor Kit (Rotor, Stainless Steel Pin, Bearings, Retainers)	525
P52509-2	**159 000 480**	Rotor Kit (Rotor, Tungsten Carbide Pin, Bearings, Retainers)	525
3-2540.320	**198 820 040**	Rotor Kit, 2540 PEEK® Bearing (old version)	2540
3-2540.321	**159 000 623**	Rotor Kit, 2540 Tungsten Carbide Pin (new version since 1.1.2000)	2540
3-2536.320-1	**198 820 052**	Rotor, PVDF Black	2536, 2537
3-2536.320-2	**159 000 272**	Rotor, PVDF Natural	2536, 2537
3-2536.320-3	**159 000 273**	Rotor, ETFE	2536, 2537
3-2536.321	**198 820 054**	PVDF Natural, Rotor kit	2536, 2537
3-2536.322-1	**198 820 056**	Sleeved Rotor, PVDF Black	2536, 2537
3-2536.322-2	**198 820 057**	Sleeved Rotor, PVDF Natural	2536, 2537
3-2536.322-3	**198 820 058**	Sleeved Rotor, ETFE	2536, 2537

Rotor Pins

Mfr. Part No.	Code	Description	Compatibility
M1546-1	**198 801 182**	Pin, Titanium	515, 2536, 2537
M1546-2	**198 801 183**	Pin, Hastelloy-C	515, 2536, 2537
M1546-3	**198 820 014**	Pin, Tantalum	515, 2536, 2537
M1546-4	**198 820 015**	Pin, Stainless Steel	515, 2536, 2537
P51545	**198 820 016**	Pin, Ceramic	515, 2536, 2537

Rotor Shafts

Mfr. Part No.	Code	Description	Compatibility
P52504-1	**198 801 500**	Rotor Shaft, Stainless steel 316 (optional)	525
P52504-2	**198 820 023**	Rotor Shaft, Tungsten Carbide (standard)	525

Bearings

Mfr. Part No.	Code	Description	Compatibility
P52503	**198 820 013**	Carbon Fiber Reinforced PTFE	525, 2540

Flow Sensor Accessories and Replacement Parts

Magmeter Flow Sensor Accessories

Mfr. Part No.	Code	Description	Compatibility
Replacement Transducers			
3-2551-P0	**159 001 211**	PP/316L SS, DN15 to DN100 (½ to 4 in.) pipe	2551
3-2551-P1	**159 001 212**	PP/316L SS, DN125 to DN200 (5 to 8 in.) pipe	2551
3-2551-P2	**159 001 444**	PP/316L SS, DN250 to DN300 (10 to 12 in.) pipe	2551
3-2551-T0	**159 001 213**	PVDF/Titanium, DN15 to DN100 (½ to 4 in.) pipe	2551
3-2551-T1	**159 001 214**	PVDF/Titanium, DN125 to DN200 (5 to 8 in.) pipe	2551
3-2551-T2	**159 000 445**	PVDF/Titanium, DN250 to DN300 (10 to 12 in.) pipe	2551
3-2551-V0	**159 001 376**	PVDF/Hastelloy-C, DN15 to DN100 (½ to 4 in.) pipe	2551
3-2551-V1	**159 001 377**	PVDF/Hastelloy-C, DN125 to DN200 (5 to 8 in.) pipe	2551
3-2551-V2	**159 000 446**	PVDF/Hastelloy-C, DN250 to DN300 (10 to 12 in.) pipe	2551
Replacement Electronics Module			
3-2551-11	**159 001 215**	Magmeter Electronics, Frequency or Digital (S^3L) Output	2551
3-2551-12	**159 001 216**	Magmeter Electronics, 4 to 20 mA Output	2551
3-2551-21	**159 001 372**	Magmeter Display Electronics, Frequency or Digital (S^3L) Output, w/Relays	2551
3-2551-22	**159 001 373**	Magmeter Display Electronics, 4 to 20 mA Output w/Relays	2551
3-2551-41	**159 001 374**	Magmeter Display Electronics, Frequency or Digital (S^3L) Output	2551
3-2551-42	**159 001 375**	Magmeter Display Electronics, 4 to 20 mA Output	2551
Other			
3-8551.521	**159 001 378**	Clear Plastic Cap for Display	2551
2120-1512	**159 001 425**	1½ in. x 1¼ in. NPT Adapter	2552
2120-2012	**159 001 426**	2 in. x 1¼ in. NPT Adapter	2552
4301-2125	**159 001 533**	1¼ inch NPT Full Port Ball Valve, Brass	2552
4301-3125	**159 001 387**	1¼ in. NPT, Female to Female Full Port Ball Valve, 316 SS	2552
5541-4184	**159 001 388**	Cable, 4 cond., 22 AWG, 4 m (13 ft)	2552
5541-4186	**159 001 389**	Cable, 4 cond., 22 AWG, 6 m (19.5 ft)	2552
3-2552.392	**159 001 530**	1¼ in. NPT, Full Port SS Ball Valve and Nipple Kit	2552
3-2552.393	**159 001 531**	1¼ in. NPT, Full Port Brass Ball Valve and Nipple Kit	2552
3-2552.394	**159 001 532**	1½ in. NPT, Conduit Adapter, Aluminum	2552

In-line Rotors

Mfr. Part No.	Code	Description	Compatibility
3-2507.081-2	**198 801 502**	2 mm Insert	2507
3-2507.081-3	**198 801 503**	3 mm Insert	2507
3-2507.081-4	**198 801 558**	4 mm Insert	2507
3-2507.080-5	**198 801 508**	DIN Connector	2507

Flow Sensor Accessories and Replacement Parts

O-rings and Gaskets

Mfr. Part No.	Code	Description	Compatibility
1220-0018	**159 000 019**	O-rings FKM (2 required per sensor)	2100
1220-0021	**198 801 000**	O-ring, FKM (2 per sensor)	515, 2536, 2537
1220-0029	**198 820 049**	Cover O-ring	2000
1220-0121	**159 000 852**	O-ring, FKM (2 required per sensor)	2540
1224-0018	**159 000 020**	O-rings EPR (EPDM) (2 required per sensor)	2100
1224-0021	**198 820 006**	O-ring, EPR (EPDM) (2 required per sensor)	515, 2536, 2537, 2540
1228-0021	**198 820 007**	O-ring, FFKM (2 required per sensor)	515, 2536, 2537, 2540
3-2507.080-3	**198 801 547**	Quad Ring	2507
P52618	**159 000 493**	Gasket	525
1222-0042	**159 001 379**	O-ring for Clear Plastic Cap, EPR (EPDM)	2551
1223-0151	**159 000 236**	Cap O-ring for yellow field mount housing	9900, ProcessPro yellow body

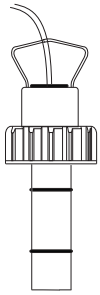

Sensor Plug

Sensor Cap

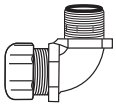

Conduit Adapter Kit

Miscellaneous

Mfr. Part No.	Code	Description	Compatibility
3-1500.663	**198 820 008**	Hot-Tap Installation Tool (See page Installation for more information)	2540
P31520-1V	**159 000 460**	Pipe Adapter Insert, PVDF	5 in. to 8 in. pipe fittings
P31520-2P	**159 000 461**	Pipe Adapter Insert, PVC	5 in. to 8 in. pipe fittings
P31536	**198 840 201**	Sensor Plug, Polypro	515, 2536, 2537
P31542	**198 801 630**	Sensor Cap, Red	515
P31542-3	**159 000 464**	Sensor Cap, Blue	2536
P31671-1	**159 000 465**	Pipe Adapter Insert, PVDF 1½ in.	1½ in. pipe fittings
P31934	**159 000 466**	Conduit Cap	515, 2536, 2540
2450-0620	**198 820 051**	Cover Screw	2000
3-2541.260-1	**159 000 849**	Standard Replacement Electronics Module	2540
3-2541.260-2	**159 000 850**	Hot-Tap Replacement Electronics Module	2540
P52527	**159 000 481**	Retainers, SS (1.4401)	525, 2540
P52628	**159 000 504**	Fitting Cap Kit (cap and gasket)	525
P51589	**159 000 476**	Conduit Adapter Kit	515, 525, 2536, 2540
5523-0222	**159 000 392**	Cable (per foot), 2 cond., w/shield, 22 AWG	515, 2507, 2000, 2540
5523-0322	**159 000 761**	Cable (per foot), 3 cond., w/shield, 22 AWG	8058, 2751, 2850, 2250, 2350, 2450
5523-3222	**159 000 393**	Cable (per foot), 2 cond., w/shield 22 AWG	525

Specials Catalog and ordering guide

This Specials Catalog provides details of modified standard GF Signet products that meet special needs of specific applications.

In this catalog, we have selected the most popular modified products used throughout the GF Global sales channel. If after your search through this catalog you do not find a product that suits your application needs, please send an email request to the Special Order Product Manager at gfinsidesales@georgfischer.com

How to Order Special Products

When an inquiry is made, a part number and quote number will be issued within two working days. When applicable an ilab Charge of $90 may be on the quote. (see example below) the quote.

SAP Material: 150 301 002
Quote Number: Q15020 001
Part Number: 3-2774-HT
Description: pH electrode, high temperature with ¾" NPT process connector
List price USD (in US dollars)
NET iLab Charge: $90.00

Quote is good until the end of the year quoted or unless specified.

When contacting our Irvine Sales Office for a quote on a Special Order product, it's important to provide the full Special Order part number to avoid any confusion. As with all standard Instrumentation, specials must be ordered through a qualified Georg Fischer Instrumentation distributor. ALL Special Order products can NOT be returned for credit.

The quote will include list price, lead-time and a quote expiration date. If the product is not ordered prior to the expiration date, product must be re-quoted.
If you need a modified version of a product listed in this catalog, or have a request for a new product, please contact gfinsidesales@georgfischer.com. We advise to include all relevant application information.

You can use the Application Assistance Form located:
1) On page 440-443 of this catalog.
2) On our website using the link below:

http://www.gfps.com/country_US/en_US/service_and_support/application.html

All GF Sales companies are required to contact the GF Signet Office.
Simply send an email request to order special products directly to the Signet Customer Service representative or the Georg Fischer Inside Sales at gfinsidesales@georgfischer.com

Terms and Conditions (In addition to Georg Fischer Standard Terms and Conditions the following shall apply)

Please read the following very carefully:

- Special Order products must be ordered directly from Georg Fischer LLC, by an approved Georg Instrumentation Distributor.
- Price is issued as a list price, with ilab charge of $90 where applicable..
- Lead-time for Special Order products is 4 to 6 weeks. (The 3-2774 family sensors could have extended lead-times of up to 9 weeks).
- All Special Order product orders must be accompanied with a:
  - Non-cancellable Purchase Order
  - Reference the SAP Material
  - Quote Number
- All Special order products can NOT be returned for credit.
- Special Order products are not guaranteed to meet all standard part specifications. Verification testing of "special modifications" to determine conformance can be performed, and will be quoted upon request by the customer. To perform such a conformance test, specific requirements of fluid type and conditions of the media and piping system must be specified. Without this information, a determination of the time required and associated non-recurring testing cannot be determined.
  If testing is not performed, buyer agrees to accept the product as-is. The buyer will be responsible for any consequential damages due to suitability of use and installation of the provided products.

P51530-2231-025-1 Paddlewheel Flow Sensors

Flow >>

The Model 515 and 2536 sensors are offered in a variety of materials for a wide range of pipe sizes and insertion configurations. The many material choices including PP and PVDF make this model highly versatile and chemically compatible to many liquid process solutions. Sensors can be installed in DN15 to DN900 (½ to 36 in.) pipes.

Also available for Wet-Tap sensors - contact the factory.

Refer to the 515 data sheet (page 70) for additional information.

PVDF Sensor body assembly built with a combination of PVC and PVDF material. Material in contact with liquid is PVDF.

**PVDF only available in X0 and X1 lengths.

SAP Material Number 150 301 001

Choose: P51530-XXXX-XXX-X OR 3-2536-XXXX-XXX-X

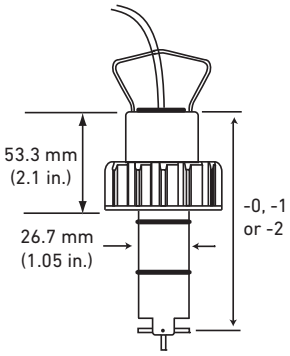

-0 = 104 mm (4.1 in.)
-1 = 137 mm (5.4 in.)
-2 = 213 mm (8.4 in.)

	Sensor Body Material
1	Black Polypropylene
2	PVDF

	Rotor Material	Signet Accessory Reference
1	Black PVDF	198 820 052
2	Natural PVDF	159 000 272
3	ETFE	159 000 273
4	Sleeved Black PVDF	198 820 056
5	Sleeved Natural PVDF	198 820 057
6	Sleeved ETFE	198 820 058

	Pin Material	
1	Titanium	198 801 182
2	Hastelloy-C	198 801 183
3	Stainless Steel	198 820 015
4	Tantalum	198 820 014
5	Ceramic	198 820 016
6	Natural PVDF*	159 500 049

	O-ring Material	
1	FKM	198 801 000
2	EPR (EPDM)	198 820 006
3	FFKM	198 820 007

-	Cable Length
025	7.6 m (25 ft)
050	15.2 m (50 ft)
075	22.8 m (75 ft)
100	30.5 m (100 ft)

-	Sensor Length
0	DN15 to DN100 (0.5 to 4 in.)
1	DN125 to DN200 (5 to 8 in.)
2	DN250 to DN900 (10 to 36 in.)

*Only available with Natural PVDF Rotors
**PVDF only available in X0 and X1 lengths

Example Part Number

P51530-2231-025-1

Paddlewheel sensor, PVDF body, Natural PVDF Rotor, Stainless Steel pin, FKM O-ring, 7.6 m (25 ft) cable for a DN125 to DN200 (5 in. to 8 in.) pipe.

General		
Operating Range		
P51530	0.3 to 6 m/s	1 to 20 ft/s
2536	0.1 to 6 m/s	0.3 to 20 ft/s
Pipe Size Range	DN15 to DN900	½ to 36 in.
Linearity	±1% of max. range @ 25 °C (77 °F)	
Repeatability	±0.5% of max. range @ 25 °C (77 °F)	
Cable Length	7.6 m (25 ft) can be extended up to 60 m (200 ft) maximum	
Max. Temperature/Pressure Ratings		
PP	12.5 bar @ 20 °C	181 psi @ 68 °F
	1.7 bar @ 90 °C	25 psi @ 194 °F
PVDF	14 bar @ 20 °C	203 psi @ 68 °F
	1.4 bar @ 100 °C	20 psi @ 212 °F

Operating Temperature			
	PP - 515	-18 °C to 90 °C	0 °F to 194 °F
	2536	-18 °C to 85 °C	0 °F to 185 °F
	PVDF - 515	-18 °C to 100 °C	0 °F to 212 °F
	2536	-18 °C to 85 °C	0 °F to 185 °F
Shipping Weight			
	P51530-X0 / 3-2536-X0	0.454 kg	1.00 lb
	P51530-X1 / 3-2536-X1	0.476 kg	1.05 lb
	P51530-X2 / 3-2536-X2	0.680 kg	1.50 lb
Standards and Approvals			
	CE, FCC (2536)		
	RoHS compliant, China RoHS		
	Manufactured under ISO 9001 for Quality and ISO 14001 for Environmental Management and OHSAS 18001 for Occupational Health and Safety		

Special order products may not meet all of the specifications of the standard sensor assemblies.

3-8150-1352-1 8510 and 8512 Sensors

Flow >>

The Model 8510 and 8512 sensors are offered in a variety of materials for a wide range of pipe sizes and insertion configurations. The many material choices including PP and PVDF make this model highly versatile and chemically compatible to many liquid process solutions.

Both the Integral Adapter Kit (3-8051) and a Field Mount Transmitter (3-8150-1 or 3-9900-1) are required (sold separately), or can be ordered fully assembled

PVDF Sensor body assembly built with a combination of PVC and PVDF material. Material in contact with liquid is PVDF. PVDF only available in X0 and X1 lengths.

Shown with the 9900-1 and 8051

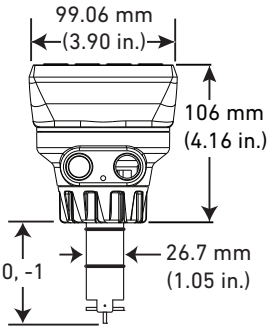

-0 = 152 mm (6.0 in.)
-1 = 185 mm (7.3 in.)

SAP Material Number 150 301 001

Choose: 3-8510-XXXX-X OR 3-8512-XXXX-X

Sensor Body Material		
1	Black Polypropylene	
2	PVDF	
Rotor Material		**Signet Accessory Reference**
1	Black PVDF	198 801 181
2	Natural PVDF	159 500 304
3	ETFE	198 820 018
4	Sleeved Black PVDF	198 820 059
5	Sleeved Natural PVDF	198 820 060
6	Sleeved ETFE	198 820 017
Pin Material		
1	Titanium	198 801 182
2	Hastelloy-C	198 801 183
3	Stainless Steel	198 820 015
4	Tantalum	198 820 014
5	Ceramic	198 820 016
6	Natural PVDF*	159 500 049
O-ring Material		
1	FKM	198 801 000
2	EPR (EPDM)	198 820 006
3	FFKM	198 820 007
-	**Sensor Length****	
0	DN15 to DN100 (0.5 to 4 in.)	
1	DN125 to DN200 (5 to 8 in.)	

*Only available with Natural PVDF Rotors
**Sensor length 1 not available in PVDF

Example Part Number

3-8510-1352-1

Integral paddlewheel sensor, PP body, ETFE Rotor, Ceramic pin, EPR (EPDM) O-ring, for a DN125 to DN200 (5 in. to 8 in.) pipe.

8510 Sensor

General			
Operating Range, 8510		0.3 to 6 m/s	1 to 20 ft/s
Pipe Size Range		DN15 to DN900	½ to 36 in.
Linearity		±.01% of max. range @ 25 °C (77 °F)	
Repeatability		±0.5% of max. range @ 25 °C (77 °F)	
Cable Length		7.6 m (25 ft) can be extended up to 60 m (200 ft) maximum	
Max. Temperature/Pressure Rating - Standard and Integral Sensor			
	PP	12.5 bar @ 20 °C	181 psi @ 68 °F
		1.7 bar @ 90 °C	25 psi @ 194 °F
	PVDF	14.0 bar @ 20 °C	203 psi @ 68 °F
		1.4 bar @ 100 °C	20 psi @ 212 °F
Operating Temperature			
	PP	-18 °C to 90 °C	0 °F to 194 °F
	PVDF	-18 °C to 100 °C	0 °F to 212 °F
Shipping Weight			
	3-8510-X0	0.23 kg	0.50 lb
	3-8510-X1	0.23 kg	0.50 lb
Standards and Approvals			
	RoHS compliant, China RoHS		
	Manufactured under ISO 9001 for Quality and ISO 14001 for Environmental Management and OHSAS 18001 for Occupational Health and Safety		

8512 Sensor

General			
Operating Range, 8512		0.1 to 6 m/s	0.3 to 20 ft/s
Pipe Size Range		DN15 to DN900	½ to 36 in.
Linearity		±1.0% of max. range @ 25 °C (77 °F)	
Repeatability		±0.5% of max. range @ 25 °C (77 °F)	
Cable Length		7.6 m (25 ft) can be extended up to 60 m (200 ft) maximum	
Max. Temperature/Pressure Ratings			
	PP	12.5 bar @ 20 °C	180 psi @ 68 °F
		1.7 bar @ 85 °C	25 psi @ 185 °F
	PVDF	14 bar @ 20 °C	200 psi @ 68 °F
		1.7 bar @ 85 °C	25 psi @ 185 °F
Operating Temperature			
	PP	-18 °C to 85 °C	0 °F to 185 °F
	PVDF	-18 °C to 85 °C	0 °F to 185 °F
Shipping Weight			
	3-8512-X0	0.454 kg	1.00 lb
	3-8512-X1	0.476 kg	1.05 lb
Standards and Approvals			
	CE, FCC, RoHS compliant, China RoHS		
	Manufactured under ISO 9001 for Quality and ISO 14001 for Environmental Management and OHSAS 18001 for Occupational Health and Safety		

Special order products may not meet all of the specifications of the standard sensor assemblies.

P525-1S-050 Metalex Sensor High Temperature, High Pressure

Flow >>

Boiler package

Signet P525 Metalex Sensor is a high pressure, high temperature paddlewheel sensor. The 316 L stainless steel version is ideal for monitoring boiler feed water and condensate return water.

The corrosion resistant Hastelloy-C version is ideal for desalination processes.

Refer to the 525 data sheet (page 90) for additional information.

SAP Material Number 150 301 001

P525-XX-XXX

	Sensor Body / Rotor / Pin Material / Fitting
1	½ - 1 in. Stainless Steel/Stainless Steel/Tungsten/Mini-tap
2	1¼ - 12 in. Stainless Steel/Stainless Steel/Tungsten/ Weld-on Mini-tap
1S	½ - 1 in. Stainless Steel/Stainless Steel/Stainless Steel/ Mini-tap
2S	1½ - 12 in. Stainless Steel/Stainless Steel/Stainless Steel/ Weld-on Mini-tap
2H	1½ - 12 in. Hastelloy-C/Stainless Steel/Stainless Steel/Customer supplied saddle or fitting only

–	Cable Length	
	050	15.2 m (50 ft)
	075	22.8 m (75 ft)
	100	30.5 m (100 ft)

Example Part Number

P525-1S-050

High Temperature, High Pressure flow sensor, ½ - 1 in. Stainless Steel body, Stainless Steel rotor, Stainless Steel pin, with mini-tap fitting, 15.2 m (50 ft) of cable.

P525-1, P525-1S

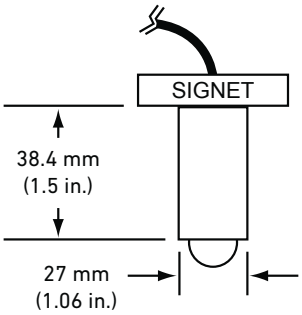

P525-2, P525-2S

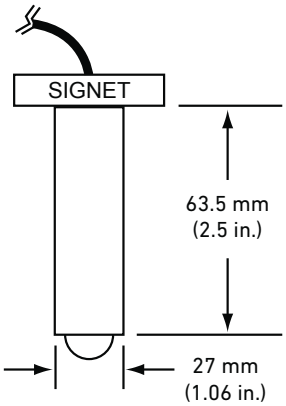

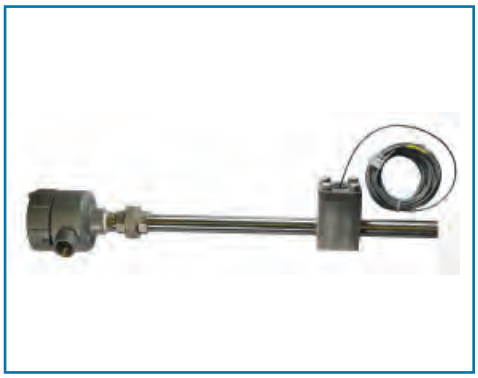

Custom stainless steel manifold available in ¾ inch to 12 inch.

General		
Operating Range	0.5 to 6 m/s	1.6 to 20 ft/s
Pipe Size Range	DN15 to DN300	½ to 12 in.
Wetted Materials		
Sensor Body	316 SS (ACI type CF-8M per ASTM A351), DIN 17440	
Rotor Material	CB7Cu-1 Alloy	
Rotor Pin	Tungsten Carbide GRP 1 or 316 stainless steel	
Retainers (2)	316 stainless steel (1.4401)	
Rotor Bearings (2)	Carbon fiber reinforced PTFE	
Gasket	KLINGER®sil C-4401 (supplied with fitting)	

Max. Temperature/Pressure Rating		
Socket Weld or Weld-On Mini-Tap Fittings	103 bar (1500 psi @ safety factor 1.5) @ 149 °C (300 °F)	
Strap-on Saddle Fitting	21 bar (305 psi) @ 66 °C (151 °F)	
Operating Temperature	-18 °C to 149 °C	0 °F to 300 °F
Shipping Weight		
P525-1/-1S	0.723 kg	1.60 lb
P525-2/-2S	0.774 kg	1.70 lb
Standards and Approvals		
RoHS compliant, China RoHS		
Manufactured under ISO 9001 for Quality and ISO 14001 for Environmental Management and OHSAS 18001 for Occupational Health and Safety		

Special order products may not meet all of the specifications of the standard sensor assemblies.

3-2820-2K-050 Conductivity/Resistivty Electrodes

Conductivity >>

Signet 2819-2821 Conductivity/ Resistivity Electrodes are designed to provide versatile installation and accurate sensing across a very broad dynamic range. These electrodes are built with a controlled surface finish to ensure accuracy and repeatability. The electrodes are with a choice of 4 different materials for maximum chemical compatibility.

A platinum RTD (PT1000) located within the electrode allows optimal temperature sensing.

Refer to the 2819-2821 data sheet (page 212) for additional information.

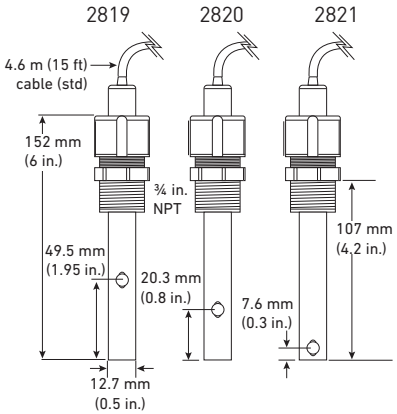

3-2819-S1

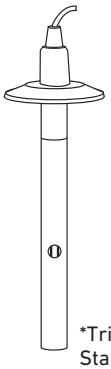

*Tri-clamp sensors are available in Stainless Steel and Titanium only.

SAP Material Number 150 301 003

3-28XX-XXX-XXX

Cell Constant						
19	K = 0.01					
20	K = 0.1					
21	K = 1.0					
	–	**Sensor Body Material**				
		1	316 Stainless Steel			
		2	Hastelloy-C 276			
		3	Titanium			
		4	Monel			
			Process Connection			
			K	½ in. NPT PVDF		
			S	½ in. NPT Stainless Steel		
			P	¾ in. NPT Polypropylene		
			DS	¾ in. Dual Stainless Steel (To install into 2850 electronics, see page 13)		
			DT	¾ in. Dual Titanium (To install into 2850 electronics, see page 13)		
			S1	1 -1½ in. Tri-clamp Stainless Steel*		
			S2	2 in. Tri-clamp Stainless Steel*		
			T1	1 -1½ in. Tri-clamp Titanium*		
			T2	2 in. Tri-clamp Titanium*		
				O-ring Material		
				-	EPR (EPDM) - standard material	
				1	FKM	
					-	**Cable Length**
					025	7.6 m (25 ft)
					050	15.2 m (50 ft)
					075	22.8 m (75 ft)
					100	30.5 m (100 ft)

*See 3-2819.606-X, page 13.

Example Part Number

3-2820-2K-050

Conductivity sensor, K = 0.1, Hastelloy-C electrode, ½ in. PVDF NPT process connector, EPR (EPDM) O-ring, 15.2 m (50 ft) of cable.

General				
Operating Range	3-2819	0.055 µS to 100 µS	18.2 MΩ to 10 KΩ	0.02 to 50 ppm
	3-2820	1 µS to 1000 µS	1 MΩ to 1 KΩ	0.5 to 500 ppm
	3-2821	10 µS to 10,000 µS	5 to 5,000 ppm	
Cell Constant Accuracy		±2% of reading (certified cells ±1%)		
Temperature Compensation Device		PT1000		
Wetted Materials				
O-rings		EPR (EPR (EPDM))		
Insulator Material		Carbon fiber reinforced PTFE		

Electrodes	316L stainless steel (1.4408, DIN 17440) Hastelloy-C, Titanium or Monel	
Max. Temperature/Pressure Rating		
Standard Polypro Fitting	6.9 bar @ 100 °C	100 psi @ 212 °F
Optional ½ in. NPT 316 SS fitting (3-2820.392)	13.8 bar @ 120 °C	200 psi @ 248 °F
Shipping Weight		
	0.40 kg	0.88 lb
Standards and Approvals		
	RoHS compliant, China RoHS	

Special order products may not meet all of the specifications of the standard sensor assemblies.

3-2823-3K1-075 Conductivity/Resistivity Sensors

Conductivity >>

Signet 2822-2823 Conductivity Sensors are designed to provide versatile installation and accurate sensing across a broad dynamic range. These sensors are built with a controlled surface finish to ensure accuracy and repeatability.

The standard material of construction is 316L SS, but there are other metals available for maximum chemical compatibility.

A platinum RTD (PT1000) located within the electrode provides accurate temperature sensing.

Refer to the 2819-2821 data sheet (page 212) for additional information.

SAP Material Number 150 301 003

3-282X-XXX-XXX

Cell Constant		
2	K = 10.0	
3	K = 20.0	
–	**Sensor Body/Electrode Material**	
1	Stainless Steel	
2	Hastelloy-C 276	
3	Titanium	
4	Monel	
Process Connection		
K	¾ in. NPT PVDF	
S	¾ in. Stainless Steel	
C	PVC Submersible	
O-ring Material		
-	EPR (EPDM) -Standard material	
1	FKM	
-	**Cable Length**	
025	7.6 m (25 ft	
050	15.2 m (50 ft)	
075	22.8 m (75 ft)	
100	30.5 m (100 ft)	

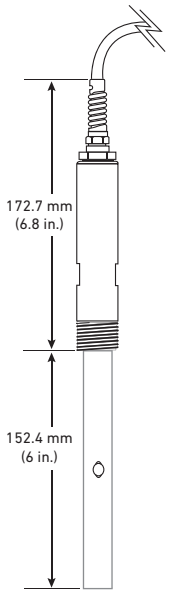

Hastelloy-C, Titanium and Monel sensor style are required to be longer in length to meet the pressure rating of the full Stainless Steel version

Example Part Number

3-2823-3K1-075

Conductivity Sensor, K = 20, Titanium electrode, FKM O-ring, PVDF ¾ in. NPT process connector with 22.8 m (75 ft) cable.

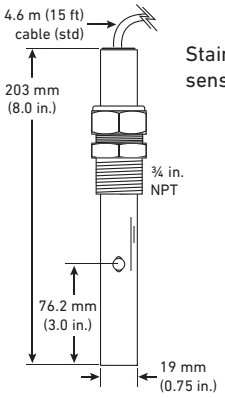

Stainless Steel sensor style

General			
Operating Range	3-2822	100 to 200,000 µS	50 to 100,000 ppm
	3-2823	200 to 400,000 µS	100 to 200,000 ppm
Temperature Compensation Device		PT1000	
Wetted Materials			
O-rings		EPR (EPDM)	
Insulator Material		PEEK®	
Process Connection		Electrodes	See Matrix
		Standard 316 SS fitting	See Matrix

Max. Temperature/Pressure Rating			
Model 3-2823, SS Style		6.9 bar @ 150 °C	100 psi @ 302 °F
Any Model, Hasteloy-C, Monel, Titanium style		5.86 bar @ 100 °C	85 psi @ 212 °F
Shipping Weight			
	3-2822	0.40 kg	0.88 lb
	3-2823	0.30 kg	0.66 lb
Standards and Approvals			
		RoHS compliant, China RoHS	

Special order products may not meet all of the specifications of the standard sensor assemblies.

3-2840-1VD-075 Conductivity/Resistivity Electrodes

Conductivity >>

The Signet 2839-2842 Conductivity/Resistivity Electrodes are available in four cell constants from 0.01 to 10.0 cm^{-1}, and are suitable for a wide variety of applications from high purity water quality monitoring to weak acids and bases. 316 SS electrode surface finishes are controlled in a precision bead blasting operation to ensure measurement accuracy and repeatability (sensor body is PVDF).

A Certificate of Calibration is included with all 2839-2842 Conductivity Electrodes. The electrodes are calibrated to meet 2% accuracy. Electrodes can be shipped back to the GF Signet Factory for recertification.

Refer to the 2819-2821 data sheet (page 222) for additional information.

SAP Material Number 150 301 003

3-28XX-XX-XXX

Cell Constant		
39	K = 0.01	
40	K = 0.1	
41	K = 1.0	
42	K = 10	
–	**Sensor Body/Electrode Material**	
1	316 Stainless Steel ONLY	
Process Connection		
V	NPT	
VD	ISO	
-	**Cable Length**	
025	7.6 m (25 ft)	
050	15.2 m (50 ft)	
075	22.8 m (75 ft)	
100	30.5 m (100 ft)	

Example Part Number

3-2840-1VD-075

Conductivity Sensor, K = 0.1, Stainless steel electrode, ISO Process Connection with 22.8 m (75 ft) cable.

3-2839-1 (0.01 cell) 3-2840-1 (0.1 cell) 3-2841-1 (1.0 cell) 3-2842-1 (10.0 cell)

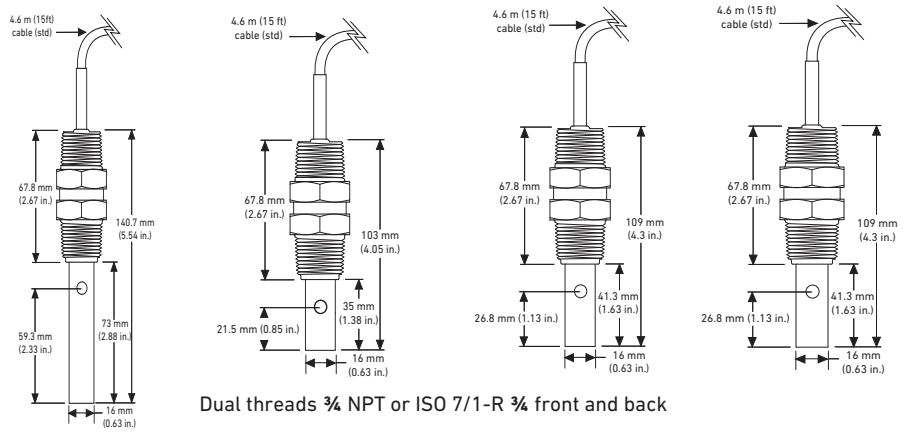

Dual threads ¾ NPT or ISO 7/1-R ¾ front and back

General				
Operating Range				
	2839	0.055 µS to 100 µS	0.02 ppm to 50 ppm	18.2 MΩ to 10 KΩ
	2840	1 µS to 1,000 µS	0.5 ppm to 500 ppm	1 MΩ to 1 KΩ
	2841	10 µS to 10,000 µS	5 ppm to 5,000 ppm	
	2842	100 µS to 200,000 µS	50 ppm to 100,000 ppm	
Wetted Materials				
Internal O-ring (2841 and 2842)	FKM			
Insulator Material	PVDF			
Electrode Material	316L SS			
Threaded Process Connection	PVDF			

Max. Temperature/Pressure Rating			
		131 °C @ 2.76 bar	268 °F @ 40 psi
Storage Temperature		-20 °C to 131 °C	-4 °F to 268 °F
Shipping Weight			
	2839	0.34 kg	0.75 lb
	2840, 2841, 2842	0.30 kg	0.66 lb
Standards and Approvals			
		RoHS compliant, China RoHS	
		Manufactured under ISO 9001 for Quality and ISO 14001 for Environmental Management and OHSAS 18001 for Occupational Health and Safety	

Special order products may not meet all of the specifications of the standard sensor assemblies.

3-2776-HT-C pH/ORP Electrodes

pH/ORP >>

Flat Glass **Protected Bulb**

The Signet 2774-2777 pH and ORP Electrodes feature a unique foul-proof DryLoc® connector with gold-plated contacts designed specifically for use with the Signet 2751 and 2760 preamplifiers, sensor electronics, and connectors.

The high temperature sensors are available for in-line applications and allows the standard preamps and electronics to be used. For hot submersible applications, a cable version of the sensor is available to locate the preamps and electronics safely outside the elevated application temperature.

Refer to the 2774-2777 data sheet (page 176) for additional information.

3-2722 BNC DryLoc Adapter
The 2722 DryLoc adapter is used to connect the Signet high temperature pH and ORP electrodes used in submersible applications to the 2751/2760 electronics.

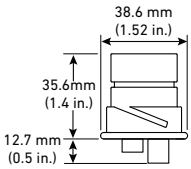

SAP Material Number 150 301 002

3-277X-XX-X

Electrode		
4	Flat Glass pH	
5	Flat ORP	
6	Bulb pH with protection	
7	Bulb ORP with protection	
Special Feature		
	HT	High Temperature in-line applications (pH)
	HF	Hydrofluoric acid applications <3% (pH)
	AU	Gold Electrode (ORP only)
Cable Option		
	–	In-line sensor, NPT
	C	Cable end for high temperature submersible applications only
	ISO	In-line sensor, ISO

Example Part Number
3-2776-HT-C
pH electrode with a protected bulb tip, for High Temperature applications, cable for submersible application.

In-line pipe installation only

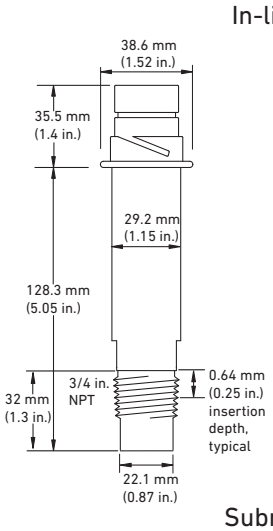

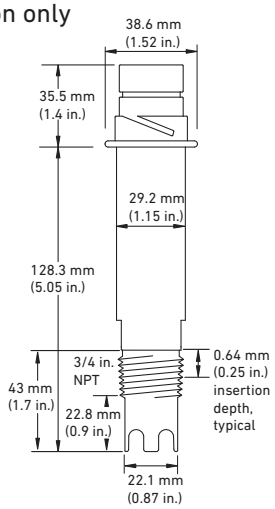

Submersible installation

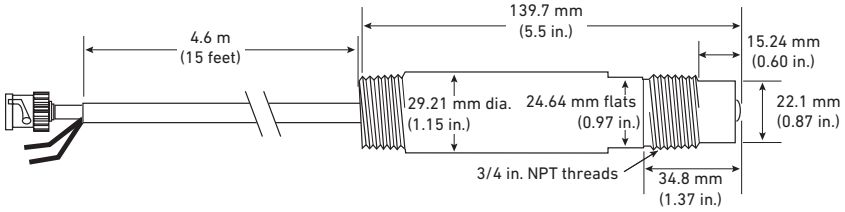

High Temperature, Submersible option requires the 2722 BNC to Dryloc adapter to electronics,

General			
Operating Range	2774/2776	0 to 14 pH	
	2775/2777	±2000 mV (ORP)	
Wetted Materials			
	Body	PPS	
	Reference Junction	PTFE	
	Sensing Surface	pH	Glass membrane
		ORP	Platinum or gold
	O-rings	FKM	

Max. Temperature/Pressure Rating		
Max Temperature	110 °C	230 °F
Max. Pressure	10 bar	150 psi
Higher temperature and pressure sensors are available upon request.		
Recommended Storage Temperature		
	0 °C to 50 °C	32 °F to 122 °F
The electrode glass will break if shipped or stored at temperature below 0 °C (32 °F)		
The performance life of the electrode will shorten if stored at temperatures above 50 °C (122 °F)		
Shipping Weight		
	0.25 kg	0.55 lb
Standards and Approvals		
	Manufactured under ISO 9001 for Quality	

Special order products may not meet all of the specifications of the standard sensor assemblies.

3-2756-WTP-XX Wet-Tap Sensors

pH/ORP >>

The Wet-Tap sensors allow installation and removal of pH or ORP electrodes, even under process pressure, without the need for process shutdown during routine electrode maintenance and calibration. Automatic process isolation is achieved during electrode retraction with a double O-ring seal on a unique and compact retraction assembly.

A separate valve is not required.

Refer to the 2756. -2757 data sheet (page 182) for additional information

SAP Material Number 150 301 002

Wet-Tap pH Electrodes

3-2756-WTP-XX

–	Special Feature	
	HF	Hydrofluoric Acid
	LC	Low Conductivity, 0 to 100 µs

Example Part Number

3-2756-WTP-LC

pH Wet-Tap electrode, for Low conductivity applications.

Wet-Tap ORP Electrodes

3-2757-WTP-XX

–	Special Feature	
	G	Gold Electrode
	LC	Low Conductivity, 0 to 100 µs
	HDPE-PR	HDPE reference junction for aquariums/salt water

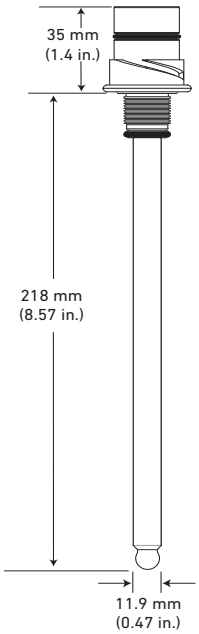

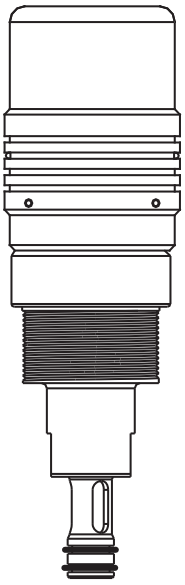

3719 Wet-Tap Assembly
A patented cam-activated automatic locking mechanism, SafeLoc®, and the short stroke design help to assure operator safety. The Wet-Tap assembly can be mounted at any angle and can be used with the Signet DryLoc® Wet-Tap electrodes.

3719 Wet-Tap assembly sold separately

General		
Operating Range	pH	0 to 14 pH
	ORP	Application dependent
Connector	CPVC	DryLoc
Temperature Sensor (pH)	3K Balco for pH	
Reference Junctions	Porous PTFE	
	Electrolyte	Saturated KCl
	Elements	Ag/AgCl
Impedance (pH)	< 150 MΩ @ 25 °C	
Wetted Materials		
Body	glass (bulb) PAS (Polyaryl sulphone)	
Reference Junctions	Porous PTFE	
Sensing Surface	pH	Glass Membrane
	ORP	Platinum

O-rings	FKM	
Connector	CPVC	
Max. Temperature Rating		
Operating Temperature	0 °C to 85 °C	32 °F to 185 °F
Recommended Storage Temperature		
	0 °C to 50 °C	32 °F to 122 °F
The electrode glass will shatter if shipped or stored at temperature below 0 °C (32 °F)		
The performance life of the electrode will shorten if stored at temperatures above 50 °C (122 °F)		
Shipping Weight		
	0.20 kg	0.44 lb
Standards and Approvals		
	Manufactured under ISO 9001 for Quality	

Special order products may not meet all of the specifications of the standard sensor assemblies.

6-2760-WTA Wet-Tap pH/ORP Sensor Assemblies

pH/ORP >>

PVC Wet-Tap pH or ORP sensors assemblies are ideal for hard to reach applications, such as tanks, and high maintenance applications that require more frequent cleaning. Built in temperature element for pH or a 10K ID resistor to allow use with the 3-2751-X smart electronics or the 3-2760-X preamplifiers.

Maintenance time is reduced by easily removing the sensor without process interruption or shut down. The sensor is easily replaced with no tools required.

Wetted material, PVC.

SAP Material Number 150 301 002

6-X7XX-XXX	
6-2760-WTA	ORP Wet-Tap sensor assembly, PVC (sensor ordered separately)
6-3760-WTA	pH Wet-Tap sensor assembly, PVC (sensor ordered separately)
6-2705-WT	ORP Wet-Tap electrode, general purpose
6-2704-WT	pH Wet-Tap electrode, general purpose

Example Part Number

6-2760-WTA

ORP Wet-Tap assembly. ORP Wet-Tap Sensor sold separately.

Electrode

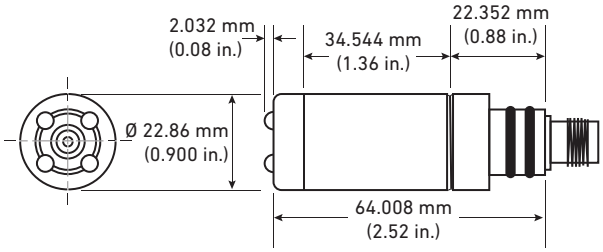

Wet-Tap Assembly

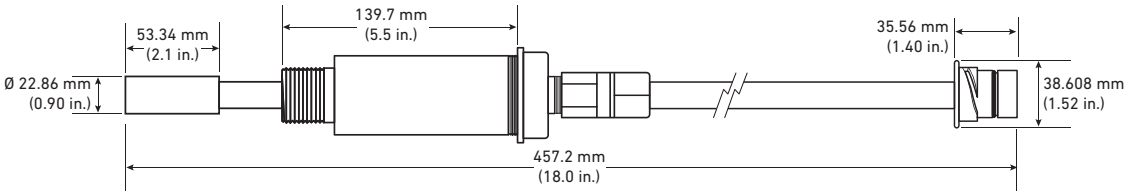

Shipping Weight		
Wet Tap Assembly (without electrode)	0.68 kg	1.50 lb
pH Electrode	0.22 kg	0.49 lb
ORP Electrode	0.22 kg	0.49 lb

Special order products may not meet all of the specifications of the standard sensor assemblies.

3-2350-3-075 Temperature Sensor

Temperature/ Pressure >>

The Signet 2350 Temperature Sensor has a one piece injection molded PVDF body that is ideal for use in high purity applications. It also outlasts metal sensors in aggressive liquids and eliminates the need for costly custom thermowells. These sensors will have both a proprietary digital (S^3L) output and field-scaleable 4 to 20 mA output.

Dual threaded ends (¾ in. NPT) allow submersion in process vessels, or in-line installation with conduit connection. An integral adapter kit (sold separately) may be used to create a compact assembly with field mount versions of the Signet 9900 Transmitter, or see page 28 to purchase a complete integral temperature/9900 sensor assembly.

SAP Material Number 150 301 004

3-2350-X-XXX

–	**Sensor**	
	3	S^3L or 4 to 20 mA output
-	**Process Connector**	
	-	¾ in. NPT process connector
	U	½ in. Union process connector
-	**Cable**	
	025	7.6 m (25 ft)
	050	15.2 m (50 ft)
	075	22.8 m (75 ft)
	100	30.5 m (100 ft)

Example Part Number

3-2350-3-075

Temperature sensor, S^3L or 4 to 20 mA output, ¾ in. NPT process connector, with 22.8 m (75 ft) cable

Shipping Weight		
	0.22 kg	0.49 lb
Standards and Approvals		
	CE, FCC	
	RoHS compliant, China RoHS	
	Manufactured under ISO 9001 for Quality and ISO 14001 for Environmental Management and OHSAS 18001 for Occupational Health and Safety	

The 2450 Pressure Sensor has a one-piece injection molded PVDF body and ceramic diaphragm for superior compatibility in corrosive liquids. Three pressure versions allow for optimal resolution matched to your sensing needs. Solid state circuitry eliminates drift (no internal potentiometers). These sensors will have both a proprietary digital (S^3L) output, or field-scaleable
4 to 20 mA output.

An integral mount kit (3-8052, sold separately) may be used to create a compact assembly with field mount versions of the Signet 9900, or see page 28 to purchase a complete integral pressure/9900 sensor assembly.

GF Signet can custom span the 4 to 20 mA output to customers requirements.
Can be ranged to vacuum

Vacuum Range		
U	-0.1 to 0.7 bar	-1.5 to 10 psi
L	-0.41 to 3.4 bar	-6.0 to 50 psi
H	-0.96 to 17.2 bar	-14.6 to 250 psi

3-2450-7X-X-XXX

	7	½ in. Union Adapter
	Pressure range	
	U	0 to 0.7 bar (0 to 10 psi)
	L	0 to 3.4 bar (0 to 50 psi)
	H	0 to 17 bar (0 to 250 psi)
	O-ring Material	
	-	FKM
	1	EPR (EPDM)
–	**Cable Length**	
	025	7.6 m (25 ft)
	050	15.2 m (50 ft)
	075	22.8 m (75 ft)
	100	30.5 m (100 ft)

Example Part Number

3-2450-7U-100

Pressure sensor, 0-10 psi with 30.5 m (100 ft) cable

Shipping Weight		
	0.150 kg	0.33 lb
Standards and Approvals		
	CE, FCC, RoHS compliant, China RoHS	
	Manufactured under ISO 9001 for Quality and ISO 14001 for Environmental Management and OHSAS 18001 for Occupational Health and Safety	

Special order products may not meet all of the specifications of the standard sensor assemblies.

3-9900-1-851XX-X Paddlewheel Flow with 9900 Transmitter

Integral Systems >> SAP Material Number 150 301 005

Signet has combined the 9900 SmartPro® Transmitter with the integral versions of the 515 (8510) and 2536 (8512) Paddlewheel Flow sensors, to create integral systems that are easy to order and simple to install. Also available in conductivity, level, temperature, and pressure configurations, each integral system features a 9900 Transmitter which provides a local and easy to read LCD display. The push button keypad makes it easy to navigate through the transmitter's menu.

The DC-powered 9900 features a scalable 4 to 20 mA output and open collector for process control.

The integral 9900 system is combined with Signet's field-proven Models 8510 and 8512. These sensors reliably perform in flow ranges from 0.3 to 6 m/s (1 to 20 ft/s) and 0.1 to 6 m/s (0.3 to 20 ft/s) respectively for pipe sizes from ½ to 8 inches. They are available in a variety of materials including polypropylene and PVDF and are easily mounted in the pipe using Signet's comprehensive line of standard fittings.

3-9900-1-851XX-X

		Sensor/ Sensor Body Material/ Sensor Rotor/ Pin Material
Integral Version of 515	0P	3-8510-PX/ Polypropylene/ Black PVDF/ Titanium
	0H	3-8510-HX/ Polypropylene/ Black PVDF/ Hastelloy-C
	0S	3-8510-SX/ Polypropylene/ Black PVDF/ Natural PVDF
	0V	3-8510-VX/ Natural PVDF/ Natural PVDF/ Hastelloy-C
	0T	3-8510-TX/ Natural PVDF/ Natural PVDF/ Natural PVDF
Integral Version of 2536	2P	3-8512-PX/ Polypropylene/ Black PVDF/ Titanium
	2H	3-8512-HX/ Polypropylene/ Black PVDF/ Hastelloy-C
	2S	3-8512-SX/ Polypropylene/ Black PVDF/ Natural PVDF
	2V	3-8512-VX/ Natural PVDF/ Natural PVDF/ Hastelloy-C
	2T	3-8512-TX/ Natural PVDF/ Natural PVDF/ Natural PVDF

–	Pipe Size
0	½ to 4 in
1	5 to 8 in. - P1 versions only

Example Part Number

3-9900-1-0P-0

9900 Transmitter with 8510-P0 paddlewheel sensor, polypropylene body, PVDF rotor and Titanium pin, for pipe size ½ to 4 in

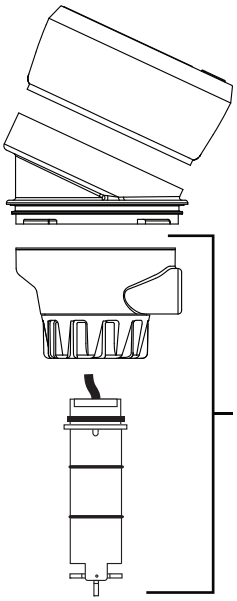

Ordering Notes
Integral Mounts are available with all parts conveniently assembled (transmitter, sensor, and mounting kit). Alternatively, all three parts can be purchased separately. See individual transmitter and sensor catalog pages for more information. Refer to Models 8510, 8512 and 9900 technical specifications for more details.

Shipping Weight		
	1.10 kg	2.4 lb
Standards and Approvals		
	See individual product datasheet for approvals	

Special order products may not meet all of the specifications of the standard sensor assemblies.

3-9900-1-40VD Conductivity with 9900 Transmitter

Integral Systems >>

Signet has combined the 9900 SmartPro®Transmitter with conductivity and resistivity sensors to create integral systems that are easy to order and simple to install. Also available in flow, level, temperature and pressure configurations, each integral system features a 9900 Transmitter which provides a local and easy to read LCD display. The push button keypad makes it easy to navigate through the transmitter's menu. The DC-powered 9900 features a scalable 4 to 20 mA output and open collector for process control.

The integral system is offered with all GF Signet conductivity sensors with cell constants ranging from 0.01 to 20. These sensors are field proven and reliably perform in ranges from 18.2 MΩ (0.055 µS) to 400,000 µS. They are ideal for installation into standard pipes via the ¾ inch sensor threaded (NPT or ISO) process connection. The sensors are available with 316 stainless steel and PVDF wetted materials.

Ordering Notes
Integral Mounts are available with all parts conveniently assembled (transmitter, sensor, and mounting kits). Alternatively, all three parts can be purchased separately. See individual instrument and sensor catalog pages for more information. Refer to Models 2839, 2840, 2841, 2842, and 9900 technical specifications for more details.

Shipping Weight		
	1.10 kg	2.4 lb
Standards and Approvals		
	See individual product datasheet for approvals	

SAP Material Number 150 301 005

3-9900-1-XXXX

–	Sensor/ Cell Constant/ Threads
19DS	3-2819 Stainless Steel/ 0.01 cm^{-1}/ ¾ in. NPT
19DT	3-2819 Titanium/ 0.01 cm^{-1}/ ¾ in. NPT
20DS	3-2820 Stainless Steel/ 0.1 cm^{-1}/ ¾ in. NPT
20DT	3-2820 Titanium/ 0.1 cm^{-1}/ ¾ in. NPT
21DS	3-2821 Stainless Steel/ 1.0 cm^{-1}/ ¾ in. NPT
21DT	3-2821 Titanium/ 1.0 cm^{-1}/ ¾ in. NPT
22-1S	3-2822 Stainless Steel/ 10.0 cm^{-1}/ ¾ in. NPT
23-1S	3-2823 Stainless Steel/ 20.0 cm^{-1}/ ¾ in. NPT
39V	3-2839-1/ 0.01 cm^{-1}/ ¾ in. NPT
40V	3-2840-1/ 0.1 cm^{-1}/ ¾ in. NPT
41V	3-2841-1/ 1.0 cm^{-1}/ ¾ in. NPT
42V	3-2842-1/ 10.0 cm^{-1}/ ¾ in. NPT
39VD	3-2839-1D/ 0.01 cm^{-1}/ ISO 7/1-R ¾
40VD	3-2840-1D/ 0.1 cm^{-1}/ ISO 7/1-R ¾
41VD	3-2841-1D/ 1.0 cm^{-1}/ ISO 7/1-R ¾
42VD	3-2842-1D/ 10.0 cm^{-1}/ ISO 7/1-R ¾

Example Part Number

3-9900-1-40VD

9900 Transmitter with 3-2840-1D sensor with a Cell constant of 0.1 cm-1, ISO 7/1-R ¾ threads.

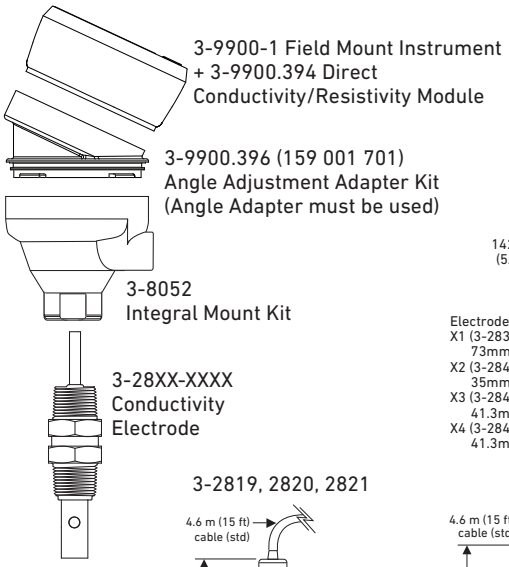

3-2839, 2840, 2841, 2842

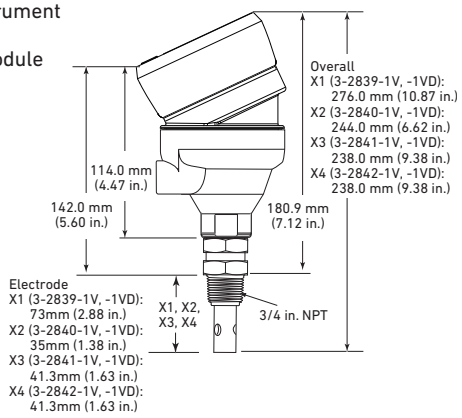

3-2819, 2820, 2821

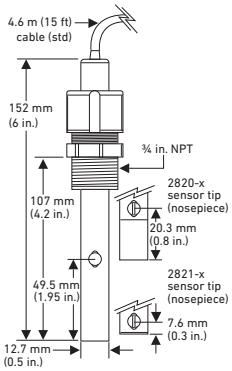

3-2822

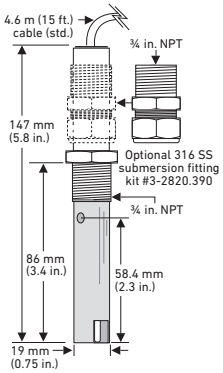

3-2823

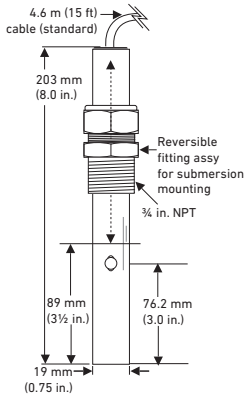

Special order products may not meet all of the specifications of the standard sensor assemblies.

3-9900-1-3U Pressure with 9900 Transmitter

Integral Systems >>

SAP Material Number 150 301 005

3-9900-1-XX

–	Sensor/ Pressure Range/ Process Connection	
	3U	3-2450-3U/ 0 - 0.7 bar (0 - 10 psi)/ ½ in. Union
	3L	3-2450-3L/ 0 - 3.4 bar (0 - 50 psi)/ ½ in. Union
	3H	3-2450-3H/ 0 - 17 bar (0 - 250 psi)/ ½ in. Union

Example Part Number

3-9900-1-3U

9900 Transmitter with 3-2450-3U, 0 - 0.7 bar (0 - 10 psi) pressure range with ½ in. Union process connection.

Signet has combined the 9900 SmartPro® Transmitter with the 2450 Pressure sensors to create integral systems for level applications that are easy to order and simple to install. Also available in conductivity, temperature, and flow configurations, each integral system features a 9900 Transmitter which provides a local and easy to read LCD display. The push button keypad makes it easy to navigate through the transmitter's menu. The DC-powered 9900 features a scalable 4 to 20 mA output and open collector for process control.

The integral system offers a local display, a scalable 4 to 20 mA output and open collector for process control. A 2450 Pressure sensor with wetted materials of ceramic and PVDF installs into a ½" union fitting. The 2450 Pressure sensor is offered in three pressure ranges which could also be used as a hydrostatic level for tank level management.

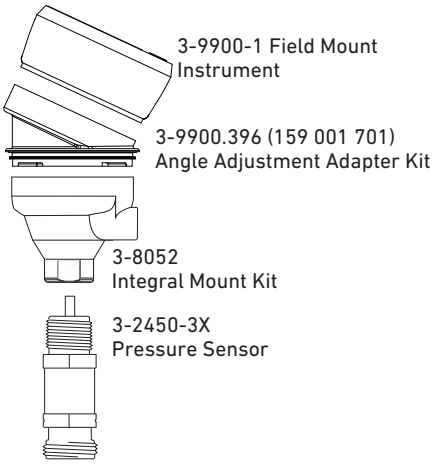

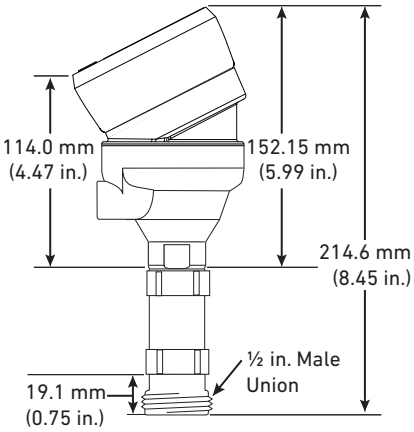

Sensor can be mounted through the side of a tank for hydrostatic level measurement. **Tip:** Add a ball valve to isolate the sensor from the tank to allow the removal of the sensor for service.

It is not recommended to use the 2450 Pressure sensor mounted inside a tank. For all tank installations where the sensor is mounted inside a tank, use 2250 Hydrostatic Level Sensor only.

Pressure/Level Ranges:	
3-2450-3U	0 to 10 psi = 0 to 7.03 meters = 0 to 23.06 ft
3-2450-3L	0 to 50 psi = 0 to 35.15 meters = 0 to 115.32 ft

Ordering Notes
Integral Mounts are available with all parts conveniently assembled (transmitter, sensor, and mounting kit). Alternatively, all three parts can be purchased separately. See individual transmitter and sensor pages for more information.

Shipping Weight		
	1.10 kg	2.4 lb
Standards and Approvals		
	See individual product datasheet for approvals	

Special order products may not meet all of the specifications of the standard sensor assemblies.

3-9900-1-1 Temperature with 9900 Transmitter

Integral Systems >>

SAP Material Number 150 301 005

3-9900-1-X

–	Sensor / Description
1	3-2350-1 / 4 to 20 mA and one open collector + digital (S^3L) temperature sensor, ¾ in. NPT threads
2	3-2350-1 / 4 to 20 mA and one open collector + digital (S^3L) temperature sensor, ½ in. union process connector

Example Part Number

3-9900-1-1

9900 Transmitter with 3-2350-1 temperature sensor with 4 to 20 mA and digital (S^3L) output plus one open collector output

Signet has combined the 9900 SmartPro® Transmitter with the 2350 Temperature sensors to create integral systems that are easy to order and simple to install. Also available in conductivity, flow, level, and pressure configurations, each integral system features a 9900 Transmitter which provides a local and easy to read LCD display. The push button keypad makes it easy to navigate through the transmitter's menu.

The DC-powered 9900 features a scalable 4 to 20 mA output and open collector for process control.

The integral system is offered with a Signet 2350 Temperature sensor and is available in a range of -10 °C to 100 °C (14 °F to 212 °F). Sensor installation is achieved into standard pipes via the ¾ inch threaded NPT process connection. The sensor is available with PVDF as a wetted material.

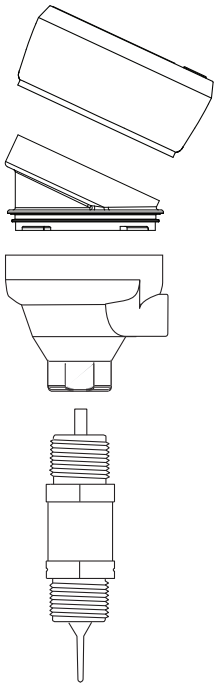

3-9900-1 Field Mount Instrument

3-9900.396 (159 001 701) Angle Adjustment Adapter Kit

3-8052 Integral Mount Kit

3-2350-1 Temperature Sensor

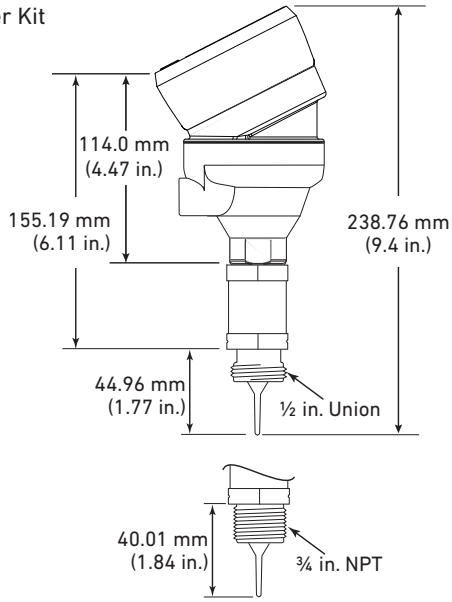

Ordering Notes
The Integral Mount is available with all parts conveniently assembled (instrument, sensor, and mounting kit). Alternatively, all three parts can be purchased separately. See individual transmitter and sensor pages for more information.

Shipping Weight		
	1.10 kg	2.4 lb
Standards and Approvals		
	See individual product datasheet for approvals	

Special order products may not meet all of the specifications of the standard sensor assemblies.

Use the 3-2450-A PVC adapter to install a 3-2450-X ½ in. union pressure sensor into a ¾ inch NPT female pipe nipple.

SAP Material Number 150 301 006

Example Part Number

3-2450-A

Adapter for the 2450 pressure sensor

3-2450-A
½ in. union to ¾ in. NPT adapter - PVC material

Shipping Weight		
	0.46 kg	1.01 lb
Standards and Approvals		
	CE	

The 2450-GG Guage Guard has a PVDF body and ½ in. union adapter. This allows the 3-2450-X pressure sensor to be used in difficult applications that can attack the ceramic diaphragm or FKM O-ring. Must be used with the 3-2450-A, sold separately.

Fill the upper chamber with a compatible liquid of the same density. A PTFE membrane separates the pressure sensor from the chemical.

Example Part Number

3-2450-GG

Gauge Guard

Shipping Weight		
	2.50 kg	5.51 lb
Standards and Approvals		
	CE	

Special order products may not meet all of the specifications of the standard sensor assemblies.

ASTM/Metric Pipe Saddles >>

Schedule 52 and Metric Ductile Iron K9 Type

The Signet IR5S and IR5MD Strap-on Iron Saddles are especially recommended where large taps are required.

The Signet Strap-on Iron Saddles have a ductile iron body per ASTM A536. The saddles have an outlet for the service connection that allows the NPT thread of the 2552 Magmeter or 3719 pH/ORP Wet-Tap assembly to be tapped into it. Sensors and Wet-Tap sold separately.

The gasket is made of Nitrile (Buna) and NSF 61 listed and has a temperature range of -29 °C to 82 °C (-20 °F to +180 °F).

SAP Material Number 150 301 006

IR5D-XXX-X

Ductile Iron Service Saddle for ductile iron pipes, with insert for flow sensor (USA)

Pipe Size - saddle and size/OD/Wall thickness	
035	3 ½ in. saddle, 3.74 to 4.13 in./ OD = 3.96 in./0.25 in.
040	4 in. saddle, 4.74 to 5.14 in./ OD = 4.80 in./0.29 in.
060	6 in. saddle, 6.84 to 7.6 in./ OD = 6.9 in./0.31 in.
080	8 in. saddle, 8.54 to 10.10 in./ OD = 9.05 in./0.33 in.
100	10 in. saddle, 10.64 to 12.12 in./ OD = 11.10 in./ 0.35 in.
120	12 in. saddle, 12.62 to 14.32 in./ OD = 13.20 in./0.37 in.
140	14 in. saddle, 14.73 to 15.65 in./ OD = 15.30 in./0.39 in.
160	16 in. saddle, 17.25 to 17.80 in./ OD = 17.40 in./0.40 in.
180	18 in. saddle, 19.38 to 19.68 in./ OD = 19.50 in./0.41 in.
200	20 in. saddle, 21.55 to 21.65 in./ OD = 21.60 in./0.42 in.
240	24 in. saddle, 25.75 to 25.85 in./ OD = 25.80 in./0.44 in.
300	30 in. saddle, 31.75 to 32.50 in./ OD = 32.00 in./0.47 in.

–	Service port access
-	with insert for flow sensor
A	1¼ in. NPT - use with 3-2552-2X or 3519
B	1½ in. NPT - use with 3-2552-3X or 3519

IR5MD-XXX-X

Iron Service Saddle (K9 type) for ductile iron pipes with insert for flow sensor (EU)

Pipe Size - saddle and size/ OD/ Wall thickness	
040	K-9 saddle, DN 40/ OD = 56 mm (2.205 in.)/ 6 mm (0.236 in.)
050	K-9 saddle, DN 50/ OD = 66 mm (2.598 in.)/ 6 mm (0.236 in.)
060	K-9 saddle, DN 60/ OD = 77 mm (3.03 in.)/ 6 mm (0.236 in.)
065	K-9 saddle, DN 65/ OD = 82 mm (3.23 in.)/ 6 mm (0.236 in.)
080	K-9 saddle, DN 80/ OD = 98 mm (3.86 in.)/ 6 mm (0.236 in.)
100	K-9 saddle, DN 100/ OD = 118 mm (4.65 in.)/ 6 mm (0.236 in.)
125	K-9 saddle, DN 125/ OD = 144 mm (5.67 in.)/ 6 mm (0.236 in.)
150	K-9 saddle, DN 150/ OD = 170 mm (6.69 in.)/ 6 mm (0.236 in.)
200	K-9 saddle, DN 200/ OD = 222 mm (8.74 in.)/ 6.3 mm (0.248 in.)
250	K-9 saddle, DN 250/ OD = 274 mm (10.8 in.)/ 6.8 mm (0.268 in.)
300	K-9 saddle, DN 300/ OD = 326 mm (12.84 in.)/ 7.2 mm (0.283 in.)
350	K-9 saddle, DN 350/ OD = 378 mm (14.88 in.)/ 7.7 mm (0.303 in.)
400	K-9 saddle, DN 400/ OD = 429 mm (16.89 in.)/ 8.1 mm (0.319 in.)

–	Service port access
-	with insert for flow sensor
A	1¼ in. NPT - use with 3-2552-2X or 3519
B	1½ in. NPT - use with 3-2552-3X or 3519

Example Part Number

IR5MD-060-C

Ductile Iron Strap-on saddle, metric K-9 saddle, for DN 60 pipe, with insert for flow sensor

Special order products may not meet all of the specifications of the standard sensor assemblies.

ASTM/Metric Pipe Saddles >>

Schedule 40 and 80

The Signet IR4S and IR8S Strap-on Iron Saddles are especially recommended where large taps are required.

The Signet Strap-on Iron Saddles have a ductile iron body per ASTM A536. The saddles have an outlet for the service connection that allows the NPT thread of the 2552 Magmeter or 3719 pH/ORP Wet-Tap assembly to be tapped into it.

The gasket is made of Nitrile (Buna) and NSF 61 listed and has a temperature range of -29 °C to 82 °C (-20 °F to 180 °F).

SAP Material Number 150 301 006

IRXXXXXX		
Iron Service Saddle		
Pipe Schedule - Iron Service Saddle		
4S	Schedule 40 pipe	
8S	Schedule 80	
	Pipe Size - OD/Wall thickness	
	020	12 in. Pipe (OD = 2.35 in. to 2.56 in./59.69 to 65.0 mm)
	025	2.5 in. Pipe (OD = 2.44 in. to 2.91 in./62 to 74 mm)
	030	3 in. Pipe (OD = 2.97 in. to 3.54 in./75.4 to 90.0 mm)
	040	4 in. Pipe (OD = 4.40 in. to 4.80 in./111.76 to 121.9 mm)
	050	5 in. Pipe (OD = 5.00 in. to 5.63 in./127 to 143 mm)
	060	6 in. Pipe (OD = 5.94 in. to 6.70 in./151 to 170 mm)
	080	8 in. Pipe (OD = 7.96 in. to 8.72 in./202.2 to 221 mm)
	100	10 in. Pipe (OD = 10.64 in. to 12.12 in./270.2 to 308 mm)
	120	12 in. Pipe (OD = 12.62 in. to 14.32 in./320.5 to 363.7 mm)
		Inlet Size
		A 1¼ in. NPT - use with 3-2552-2X or 3519
		B 1½ in. NPT - use with 3-2552-3X or 3519

Example Part Number

IR8S080A

Iron Strap-on saddle, schedule 80 pipe, for 8 inch/202mm pipe 1¼ inch NPT inlet.

Special order products may not meet all of the specifications of the standard sensor assemblies.

ASTM/Metric Pipe Saddles >>

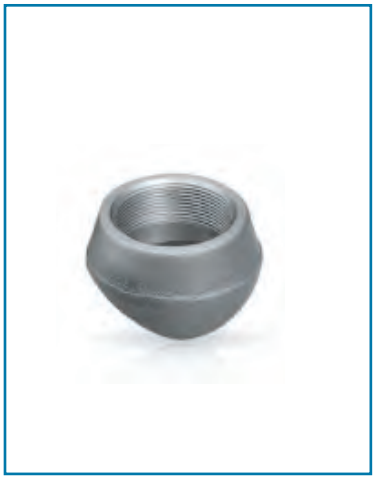

The Weld-on Weldolet allow easyinstallation of the 3-2552 and 3-3719-11 pH/ORP Wet-Tap assembly into metal piping systems. These products are available in Stainless Steel, Carbon Steel and Brass.

Smaller Weld-on Weldolet sizes are available.

WARNING:
Verify the pipe ID, OD, wall thickness and the sensor to be used in the application. Contact GF Special products for assistance in verifying proper system selection.

SAP Material Number 150 301 006

Choose: 2129-9XXX (Carbon Steel), 2149-9XXX (Stainless Steel) or 2189-9XXX (Brass)

Stainless Steel	
Use with 2552-21	
202	2 in. Threadolet, 1 ¼ in. NPT connection
204	4 to 5 in. Threadolet, 1 ¼ in. NPT connection
291	6 in. (153 mm) weldolet, 1 ¼ in. NPT connection
292	8 to 10 in. (203 to 254 mm) weldolet, 1 ¼ in. NPT connection
294	12 to 18 in. (305 to 457 mm) weldolet, 1 ¼ in. NPT connection
295	20 to 36 in. (508 to 915 mm) weldolet, 1 ¼ in. NPT connection
296	38 in. (965 mm) weldolet, 1 ¼ in. NPT connection
Use with 2552-33 or 3-3719-11	
091	6 in. (153 mm) weldolet, 1 ½ in. NPT connection
092	8 to 10 in. (203 to 254 mm) weldolet, 1 ½ in. NPT connection
094	12 to 18 in. (305 to 457 mm) weldolet, 1 ½ in. NPT connection
095	20 to 36 in. (508 to 915 mm) weldolet, 1 ½ in. NPT connection
096	38 in. (965 mm) weldolet, 1 ½ in. NPT connection

Example Part Number

2189-9091 Brass

Threaded weldolet, brass, for a 6 in. pipe, 1½ in. NPT connection.

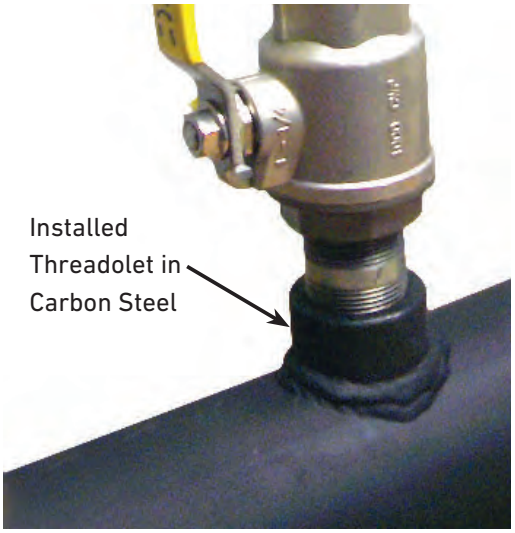

Shipping Weight	
0.50 kg (approx.)	1.10 lb (approx.)

Special order products may not meet all of the specifications of the standard sensor assemblies.

SAP Material Number 150 301 006

ASTM/Metric Pipe Saddles >>

PVC Saddle, ASTM/Metric pipe sizes, glue-on, PSI rated 5.5 bar (80 PSI)

Shown with insert

A full line of PVC glue on saddle for large pipes. Proper installation requires the customer to provide and install straps after gluing to meet the 80 psi pressure rating.

Saddles are available to allow all GF Signet flow sensors or 3719 pH Wet-Tap assembly to be installed into PVC piping systems.

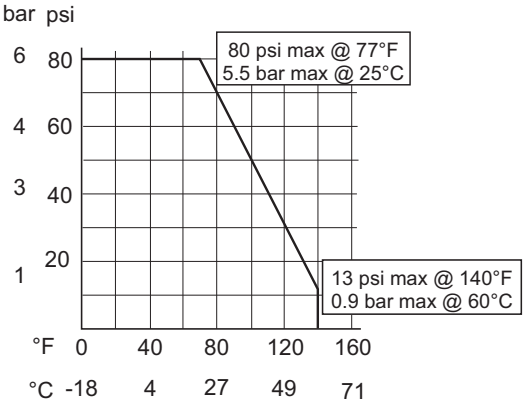

PV8SXX-X

	Pipe Size - ASTM PVC Saddles
10	Schedule 80, 10 in. (OD = 10.75 in. X 0.596 in. wall)
12	Schedule 80, 12 in (OD = 12.75 in. x 0.687 in. wall)
14	Schedule 80, 14 in. (OD = 14.00 in. x 0.750 in. wall)
16	Schedule 80, 16 in. (OD = 16.00 in. x 0.843 in. wall)
18	Schedule 80, 18 in. (OD = 18.00 in. x 0.938 in. wall)
20	Schedule 80, 20 in. (OD = 20.00 in. x 1.031 in. wall)
24	Schedule 80, 24 in. (OD = 24.00 in. x 1.219 in. wall)

-	Service port size
-	with insert for flow sensor
A	1¼ in. NPT for 2552-2 X
B	1½ in. NPT for 2552-2X or 3519
C	2.0 in NPT for 3519

IPSXXX-X

	Pipe Size Metric PVC Saddles
110	PVC IPS 110 mm pipe
350	PVC IPS 350 mm pipe
400	PVC IPS 400 mm pipe
450	PVC IPS 450 mm pipe
500	PVC IPS 500 mm pipe
550	PVC IPS 550 mm pipe
600	PVC IPS 600 mm pipe

-	Service port size
-	with insert for flow sensor
A	1¼ in. NPT for 2552-2 X
B	1½ in. NPT for 2552-2X or 3519
C	2.0 in NPT for 3519

Example Part Number

IPS450-C

PVC glue-on saddle, IPS 450 mm pipe, with insert for flow sensor.

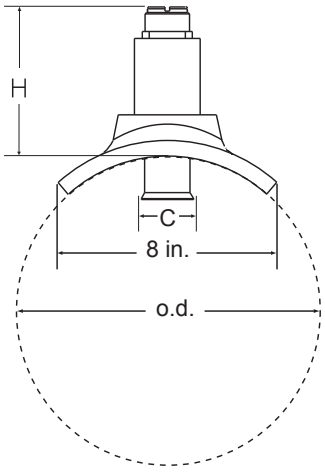

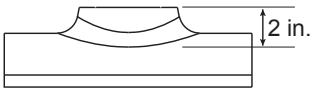

Straps used during installation

Special order products may not meet all of the specifications of the standard sensor assemblies.

SAP Material Number 150 301 006

ASTM/Metric Pipe Saddles >>

Vinyl ester resin fiberglass saddles

Shown with insert

Metric fiberglass saddles are manufactured from corrosion resistant epoxy vinyl ester, polyester, isophthalic, epoxy and furan resins. ASTM E-84 Class 1 flame spread and low smoke resins are also available where applications require their use.

Our standard resin systems allow operating temperatures to 200 °F, with higher temperatures of 250 °F and 300 °F available.

Ultraviolet inhibitor and waxcoat in the external layers are standard on all fiberglass saddles.

FPSXX(X)-X

Pipe Size - MUST supply OD, ID and Wall Thickness when ordering	
20	2 in. Fiberglass Pipe
30	3 in. Fiberglass Pipe
40	4 in. Fiberglass Pipe
60	6 in. Fiberglass Pipe
80	8 in. Fiberglass Pipe
100	10 in. Fiberglass Pipe
120	12 in. Fiberglass Pipe
140	14 in. Fiberglass Pipe

Service port access	
-	with insert for flow sensor
A	1¼ in. SS NPT insert for 2552-2 X (NOT available for 14 in. pipe)
B	1½ in. SS NPT insert for 2552-3X or 3519 (NOT available for 14 in. pipe)

Example Part Number

FPS100-A

Vina\yl ester resin fiberglass saddle, for a 10 in. fiberglass pipe, 1¼ in. NPT insert for 2552-2X.

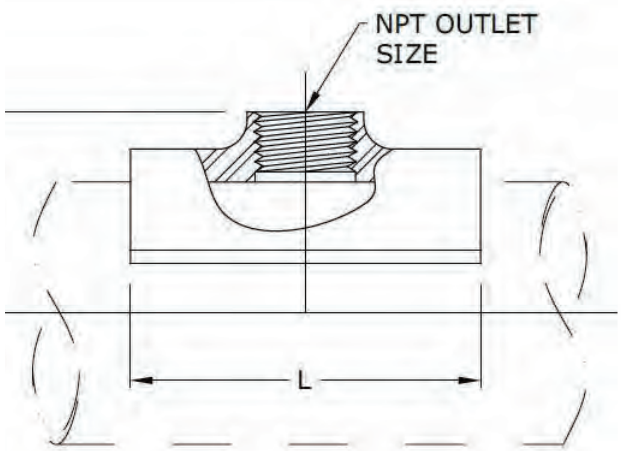

Straps used during installation

Special order products may not meet all of the specifications of the standard sensor assemblies.

SAP Material Number 150 301 006

Instruments and Misc. >>

OEM Version, Chlorine and Chlorine Dioxide Systems

The OEM version of the 4630 chlorine panel family is to incorporate the GF Signet Chlorine panel design into your own control panel or skid. Complete with the standard flow cell rated up to 120 psi (8 bar), with intergrated pressure regulator, VAFM and isolation valves, inlet, effluent and sample port.

Free chlorine or Chlorine dioxide electronics (2650-7) and optional pH electronics (2750-7) are supplied with 15 ft. (4.6 m) cable to allow flexible design and separation between the 8630 transmitter and flow cell. 8630 transmitter can be powered directly with 12 to 24 volts DC or use a 7300 series power supply for AC powered applications. Comes with a Chlorine Sensor and optional pH electrode.

3-463X-X-X

Chlorine/Chlorine Dioxide Systems - OEM			
0	Free Chlorine		
2	Chlorine Dioxide		
	-	**Range**	
		1	0.02 to 2 PPM
		2	0.05 to 5 PPM
		3	0.1 to 20 PPM
		-	**Options**
			0 No pH electrode
			1 With pH electrode

Example Part Number

3-4632-2-1

OEM Chlorine Dioxide system, 0.05 to 5 PPM, with pH electrode.

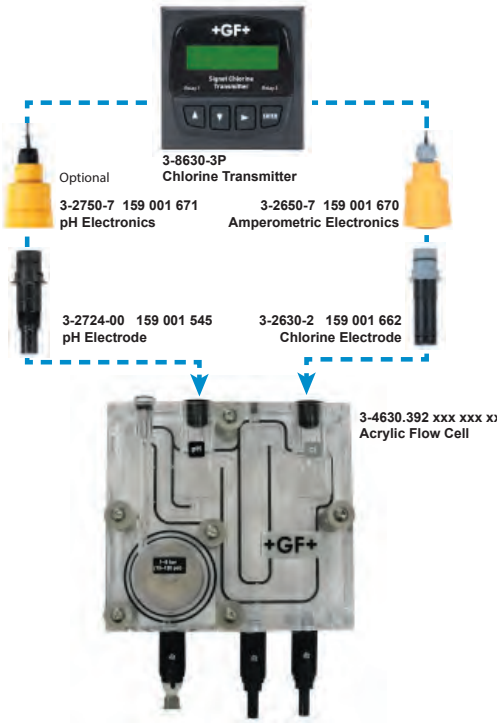

General		
Materials		
Flow Cell	Acrylic	
Wiring Enclosure	Polycarbonate	
Max. Temperature/Pressure Rating		
System Inlet Pressure Rating	1 to 8 bar	15 to 120 psi
Pressure Regulator	< 0.69 bar (10 psi) variation over all ranges of flow and pressure	
Flow Tolerance	± 15% or rated specification above	
Flow Rate Limits	30.24 to 45.36 LPH	8 to 12 US gal/h
Storage Temperature	0 °C to 65 °C	32 °F to 149 °F

Operating Temperature	0 °C to 45 °C	32 °F to 113 °F
Electrical		
DC Input - Standard Configuration	12 to 24 VDC ±10% regulated, 250 mA max.	
AC Input - Optional Configuration	100 to 240 VAC nominal 50 to 60 Hz, 0.17A at 100 VAC	
Shipping Weight		
	10 kg	22 lb
Standards and Approvals		
	CE, UL, CUL, China RoHS	
	Manufactured under ISO 9001 for Quality and ISO 14001 for Environmental Management	

Special order products may not meet all of the specifications of the standard sensor assemblies.

Installation of Flow Sensors: Paddlewheel

I. Piping Location

- The correct location of the sensor in the piping system helps to ensure a proper flow profile in the pipe. It is important to have sufficient straight pipe immediately upstream of the sensor to create "fully developed turbulent flow." Such a flow profile provides the stability required for the paddlewheel to measure accurately.
- The diagrams below illustrate the minimum distances that are recommended to mount plastic and metal paddlewheel sensors.
- In all scenarios, it is recommended to choose a location with as much straight, uninterrupted pipe length upstream of the sensor as possible. Always use synthetic grease on O-rings.

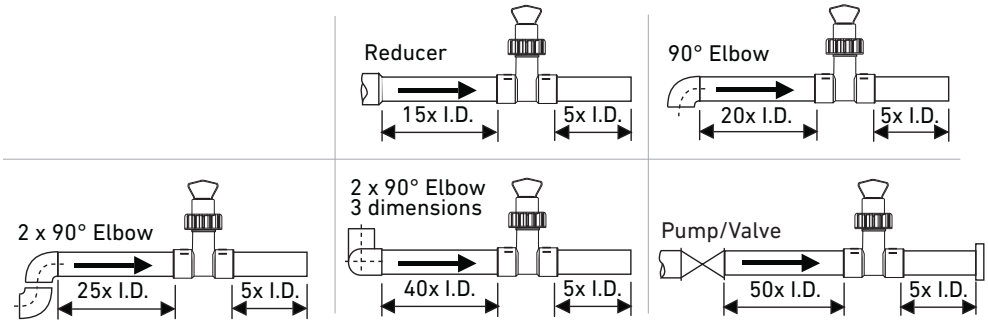

II. Mounting Angle

Paddlewheel sensors are affected by the mounting angle due to the effect of gravity increasing the friction between rotor and bearing surfaces. Air entrapment and sediments within the pipe may also adversely affect sensing accuracy and/or impede operation.

Paddlewheels in Vertical Pipes

- Mount the sensor in a pipe with an upward flow. This position is recommended for all scenarios, as it ensures a full pipe.
- Vertical installations with downward flow are not recommended.

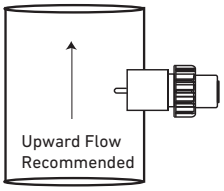

Paddlewheels in Horizontal Pipes

- Recommended sensor mounting angle is ±45° from vertical to avoid air bubbles (pipe must be full). With the sensor at greater angles, the drag created by the rotor resting against the sensor body may compromise performance at the lower end of the operating range.
- Straight up installations may experience interference from entrained air at the top of the pipe.
- Inverted installations are often subject to blockage due to sediments in the pipe. Mounting sensors in the bottom of the pipe is NOT recommended if sediments are likely to be in the pipe.

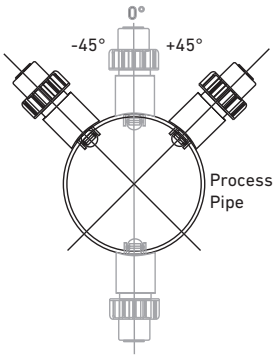

K-Factors

K-Factors are calibration values (pulses per unit of volume) used to convert flow sensor output frequencies to flow rates. Signet publishes K-Factors for water only in gallons (pulses per gallon) and liters (pulses per liter) for all sensors, in all applicable pipe sizes and materials, and/or all applicable installation fitting sizes and materials. K-Factors for fluids other than water must be determined empirically, typically on-site using a secondary standard.

! NOTE: K-Factors are published for pipe sizes of DN15 to DN300 (½ in. to 12 in.). For other pipe sizes, statistical K-Factors may be available. Contact Technical Support for more information.

Installation of Flow Sensors: Paddlewheel

III. Installation Fittings

515, 2536 and 2537 Rotor-X

- This section outlines the installation fittings available from Signet for the 515, 2536 and 2537 Rotor-X family of flow sensors. The fitting controls the location of the paddlewheel inside the pipe, which in turn determines the calibration constant (K-Factor).
- Refer to the Fittings section of this catalog for a complete listing of part numbers.

Type	Description
Plastic Tees 	• 0.5 to 2 inch versions • PVC or CPVC • Available with or without pipe extensions
PVC Glue-on Saddles 	• Available in 10 and 12 inch sizes only • Cut 2-1/2 inch hole in pipe • Weld in place using solvent cement
Clamp-on Saddles 	• 2 to 4 inch, cut 1-7/16 inch hole in pipe • 6 to 8 inch, cut 2-1/8 inch hole in pipe
Iron Strap-on Saddles 	• 2 to 4 inch, cut 1-7/16 inch hole in pipe • Over 4 inch, cut 2-1/8 inch hole in pipe • Special order 12 in. to 36 in. • 2 inch to 8 in. PVDF insert • >8 in. PVC insert

Type	Description
Iron, Carbon Steel, 316 SS Threaded Tees 	• 0.5 to 2 in. versions • Mounts on threaded pipe ends • Wetted PVDF insert
Carbon Steel & Stainless Steel Weld-on Weldolets 	• 2 to 4 inch, cut 1-7/16 inch hole in pipe • Over 4 inch, cut 2-1/8 inch hole in pipe • 1.5 in. to 8 in. PVDF insert • >8 in. PVC insert
Fiberglass Tees 	• 1.5 in. to 2 in. PVDF insert
Metric Union Fitting 	• For pipes from DN15 to 50 mm • PP or PVDF • Socket fusion equipment required

525 Metalex

- This section outlines the installation fittings available from Signet for the 525 Metalex family of flow sensors. The fitting controls the location of the paddlewheel inside the pipe, which in turn determines the calibration constant (K-Factor).
- Refer to the Fittings section of this catalog for a complete listing of part numbers.

525-1 Metalex Flow Sensor

The smallest Metalex Flow Sensor (525-1) must be installed into a specially constructed tee fitting with socket-weld piping connections.

525-2 Metalex Flow Sensor

Use the 525-2 and one of these weld-on fittings for stainless steel pipes from DN32 (1¼ inches) up to DN300 (12 inches) in diameter.

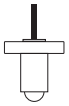

525-1 Sensor

Wetted fitting materials: 316 SS (1.4401)

Tee Fitting, hardware included

525-2 Sensor

Wetted fitting materials: 316 SS (1.4401) & 347 SS

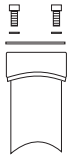

Mini-Tap Fitting, hardware included

Consult a qualified welder to install Metalex fittings.
Use of saddle fittings reduces the pressure rating for the 525 sensor.

Fixed Depth

The insertion depth of a paddlewheel in a flow stream is critical and must be achieved and maintained to ensure accurate flow measurements. Signet installation fittings for Rotor-X and Metalex paddlewheel flow sensors set this depth automatically and facilitate the use of convenient K-Factors (calibration values) published in individual sensor instruction manuals.
The H-dimension controls the insertion depth and they are critical for proper seating of the flow sensor into the pipe. These dimensions can be found listed in the flow sensor instruction manuals.

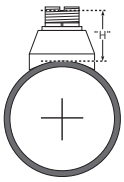

Installation of Flow Sensors: Paddlewheel

IV. Rotor Replacement

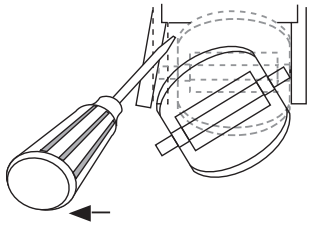

Procedure for Plastic Paddlewheel Sensors

1. To remove the rotor, insert a small screwdriver between the rotor and the ear of the sensor.

2. Twist the screwdriver blade to flex the ear outward enough to remove one end of the rotor and pin.

> **!** NOTE:
> Do not flex the ear more than required to remove the pin. If it cracks, it cannot be repaired!

3. Install the new rotor by inserting one tip of the pin into the hole, then flex the opposite ear back enough to slip rotor into place.

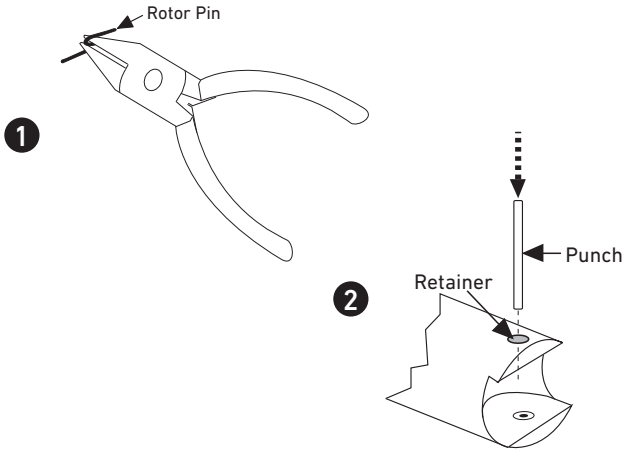

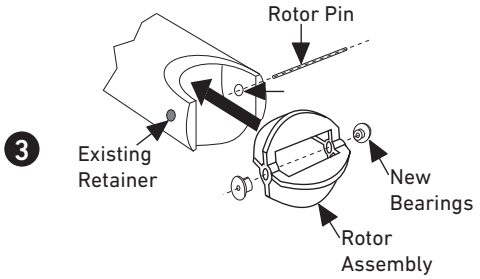

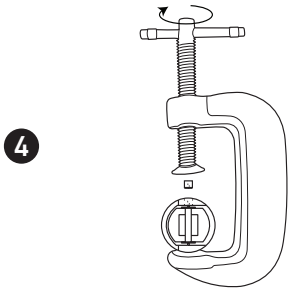

Procedure for Metal Paddlewheel Sensors

1. With a small pair of needle-nose pliers, firmly grip the center of the rotor pin (axle) and with a twisting motion, bend the rotor pin into an "S" shape. This should pull the ends of the pin out of the retainers and free the rotor assembly.

2. Remove rotor pin retainer from each side by gently tapping it inwards using a punch. Install a new retainer into the sensor body with its rotor pin clearance hole inward. Only install one retainer at this time.

3. Insert the new rotor assembly and bearings into the rotor housing of the sensor and place the new rotor pin (axle) through the open end of the rotor housing, through the rotor and bearings, and into the previously installed retainer.

4. Using a vise or C-clamp, press the second retainer into the hole in the sensor body while lining up the rotor pin with the center of the retainer hole.

   Note: A hammer and center punch can also be used if a clamp or vice is not available.

Installation of Flow Sensors: Paddlewheel

V. Cable Glands and Conduit Adapter Kits

Cable glands and conduit adapter kits are available to install on models 515, 2536, and 525 when used in wet environments. These items protect against moisture entering the back end of the sensor. Follow these simple instructions to prolong the life of the sensor. Conduit adapters are included with the 2540 sensors.

1) Remove the black nylon bushing to expose the female threads at the back end of the flow sensor. Use a standard medium size screwdriver to pry the bushing up and out of the port. Slide it up and off the entire length of the cable, or cut it away carefully so as not to nick the cable jacket.

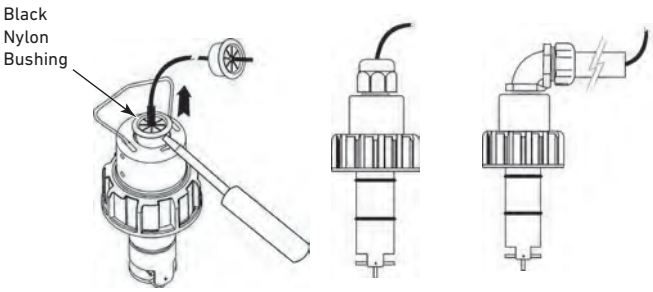

2) Thread the gland or conduit adapter over the cable and screw the ½ in. NPT male threads into the top of the sensor in place of the bushing.

3) For liquid-tight glands, tighten the compression fitting onto the fitting sufficiently to achieve a seal around the cable.

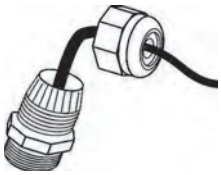

Cable Gland 3-9000.392-1
(Liquid Tight Connector)

Conduit Adapters P51589
(suitable for all plastic and metal Paddlewheel Sensors)

4) For conduit adapters, thread the cable through the adapter and tighten the adapter into the sensor fitting.

Flow Installation Tips

- Use Signet fittings for proper insertion into the process flow.
- Recommended upstream distances are stated as a multiplier of the I.D. (inner diameter) dimension of the pipe. Note that these multipliers are different for each example and depend upon the upstream obstruction.
- Paddlewheel sensors can be used for all water-like fluids with little or no particulates (<100 micron in diameter/length), and non-ferrous, non-fouling in nature.
- Always use these sensors in full pipes.
- Always maximize the distance between sensors and pump sources.
- Ensure that all wetted materials are chemically compatible with the process liquid.
- Pressure and temperature ratings are reduced when plastic flow sensors are mounted in metal piping systems.
- The flow sensor is designed to fit tightly into the fittings. Lubricate O-rings with a non-petroleum based, viscous lubricant (grease) compatible with the system.
- Cut the cable to the desired length if too long. Do not coil extra cable.

Installation of Flow Sensors: Wet-Tap and Hot-Tap

VI. Wet-Tap and Hot-Tap Installation

3519 Wet-Tap valve with a 515 Paddlewheel Sensor

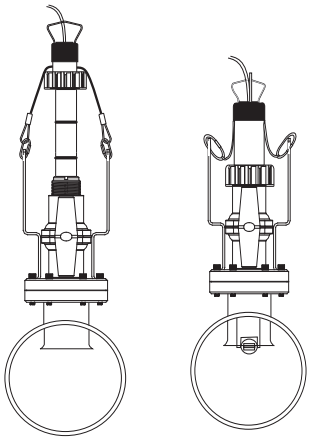

Before insertion After insertion

3519 Wet-Tap Valve

- The 3519 Wet-Tap consists of a flange and support plate that threads onto the pipe fitting insert, and a PVC ball valve through which an extended length, wet-tap style sensor is inserted into the pipe.
- No special tools are required to install the 3519.
- The Signet 3519 Wet-Tap Valve mounts directly onto standard Signet installation fittings for the 515 and 2536 flow sensors. The Wet-Tap sensors are identified in their part number as -P3, -P4 and -P5, depending on the pipe size.
- The 3519 Wet-Tap valve can only be installed in an empty pipe. Once installed, the sensor can be removed and re-inserted while the process is active.
- Pressure must be reduced prior to insertion and removal of sensor (please see individual product page for more information). Lubricate O-rings with a non-petroleum based, viscous lubricant (grease) compatible with the system.

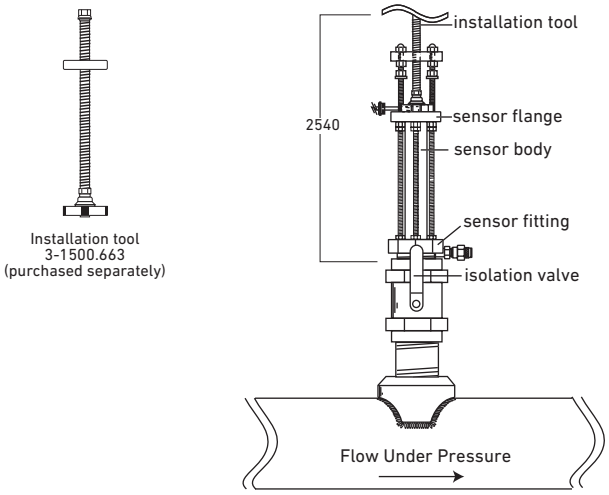

2540 and 2552 Hot-Tap

- The Signet 2540 and 2552 Metal high performance flow sensors accommodate hot-tap installations. One sensor can be installed in various pipe sizes.
- The valve for Hot-Tap sensors can be installed while the pipe is full if a hot-tap drill is used.
- To install a Hot-tap sensor, you will need a hot-tap drilling machine, a metal ball or gate valve, a metal pipe nipple with 1½ inch threads and the Signet Hot-Tap installation tool (2540 only).
  Consult with your piping supplier for information regarding drills.
- The necessary metal valve and pipe nipple are not available from Signet. You can purchase these standard hardware items from a local supplier.
- Hot-Tap sensors can be installed and removed without process shutdown.
- Care must be taken while removing sensor under process conditions.
- The installation tool serves to hold the sensor against the line pressure as it is retracted or inserted into the pipe (2540 only).
- The Hot-Tap installation fitting has a bleed valve to relieve the pressure when retracting the sensor (2540 only).

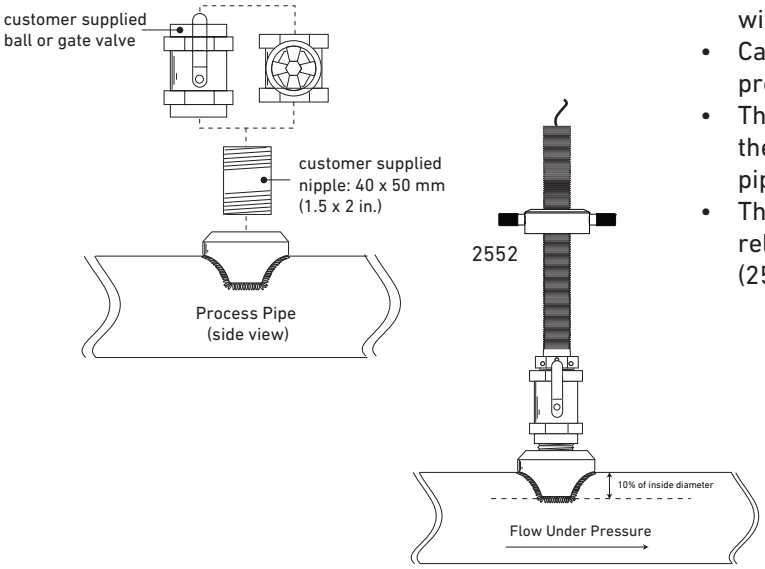

Installation of Flow Sensors: In-Line Rotors and Turbines

I. Piping Location

- The location of the sensor in the piping system determines the flow profile that the sensor is monitoring. The ideal location is to have sufficient straight pipe immediately upstream of the sensor to create "fully developed turbulent flow." Such a flow profile provides the stability required for the paddlewheel to measure accurately.
- The diagrams below illustrate the minimum distances recommended from various obstructions.
- In all scenarios, it is recommended to choose a location with the maximum length of straight, uninterrupted pipe.
- Six common installation configurations are shown below as guidelines to help you select the best location in your piping system for the flow sensor. Always maximize distance between sensors and pump sources.
- Never install immediately downstream of valves, fittings, etc.
- Observe minimum Reynolds Number (see Technical Reference section).
- The flow sensors are not for bi-directional operation.

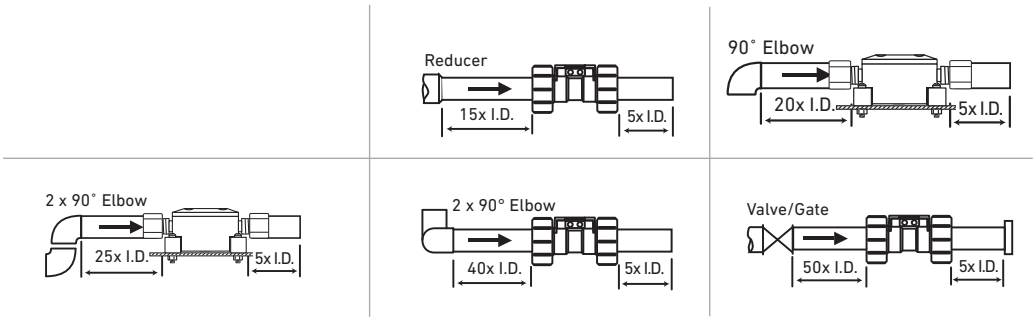

- For optimal performance of the 2507, a straight flow run of at least 100 to 150 mm (4 to 6 in.) should be allowed before and after the sensor.

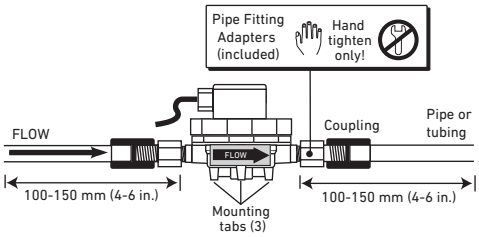

2507 Mini-Flow Sensor

II. Mounting Angle

The mounting angle of the sensor may affect the performance of the system.

In-line Rotors:

- Signet Models 2507 and 2000 flow sensors are designed to be mounted on a flat surface, although the sensors may be tilted up to ±30° if necessary.
- Installation in excess of 30° will affect the accuracy of the sensor.
- For Model 2507, two pipe fitting adapters (included) convert the straight threads G-¼ in. to ¼ in. NPT.
- These sensors should be installed securely to their supporting surface to prevent vibrations from affecting the performance.

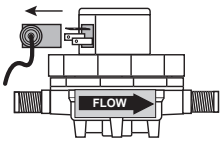

2507 In-Line Rotor

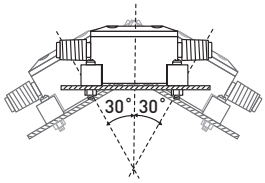

Vertical mounting is NOT recommended

2000 Micro Flow Sensor

Turbine Flow Sensors

- All mounting angles are acceptable for these sensors if the basic parameters are met: the pipe must be full with no entrapped air.
- Install the sensor with the arrow pointing in the direction of the flow of liquid.

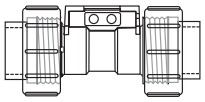

2100 Turbine Flow Sensor

Installation of Flow Meter: FlowtraMag

The 2580 requires a minimum of 3x ID upstream and 2 x ID downstream of the sensor for best performance.

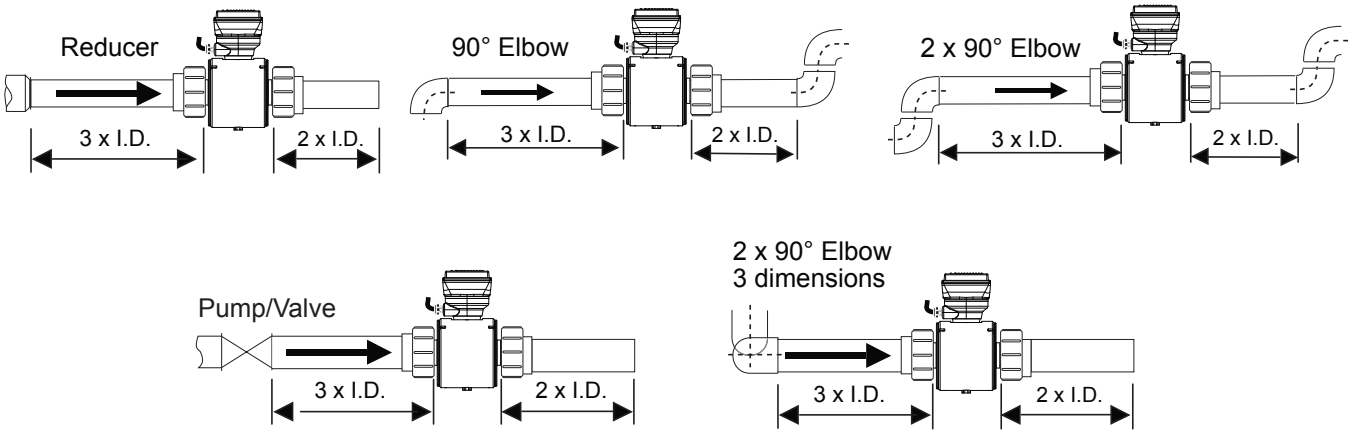

Horizontal Pipe Runs
2580 electronic head should be mounted at top of pipe (12 o'clock).

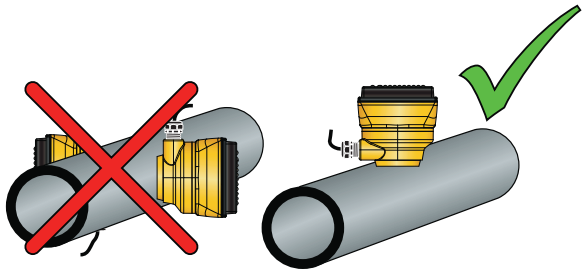

Vertical Pipe Runs
To ensure pipe is flowing full with some back pressure, it is highly recommended that the fluid flows upward.

Gravity and Discharge Lines
It is recommended to install a u-trap to ensure the pipe remains full at all times, and to minimize air bubbles. A vacuum breaker may be required downstream of the FlowtraMag to ensure pipe doesn't drain and fill with air.

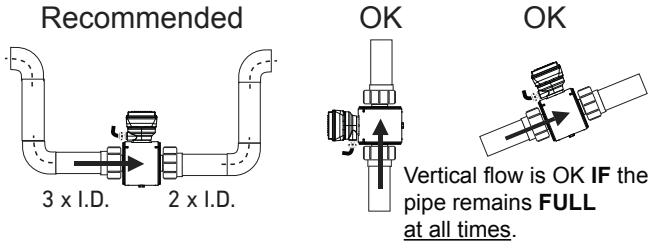

2580 1 in. and 2 in. mounting

1. Choose a mounting location that satisfies the requirements.
2. Install sensor with flow arrow pointing in the direction of flow.

2580 (1 in.)
2580 (2 in.) Union Ends
Hand Tighten Only!

Note: Gland fittings should point upstream of flow.

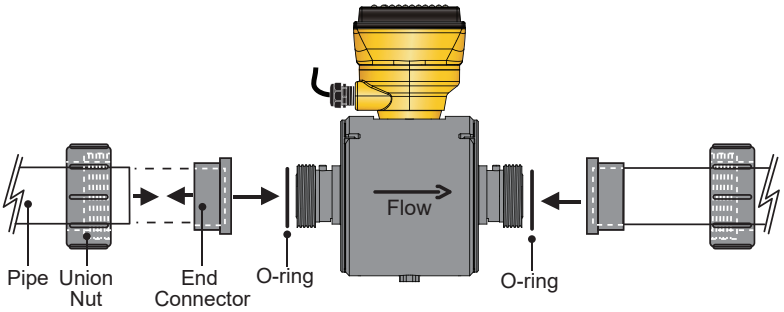

Installation of Flow Meter: FlowtraMag

2580 4 in. mounting

2580 (4 in.) Bolts
DO NOT OVER TORQUE!
Recommended bolt torque for the 4" flange of 20 to 30 ft-lbs (27-41 Nm)

Tighten bolts by first assembling and hand tightening the nuts to position the gasket in place. Then tighten the bolts in a diagonal pattern 50% the recommended torque, then 100% of recommended torque.

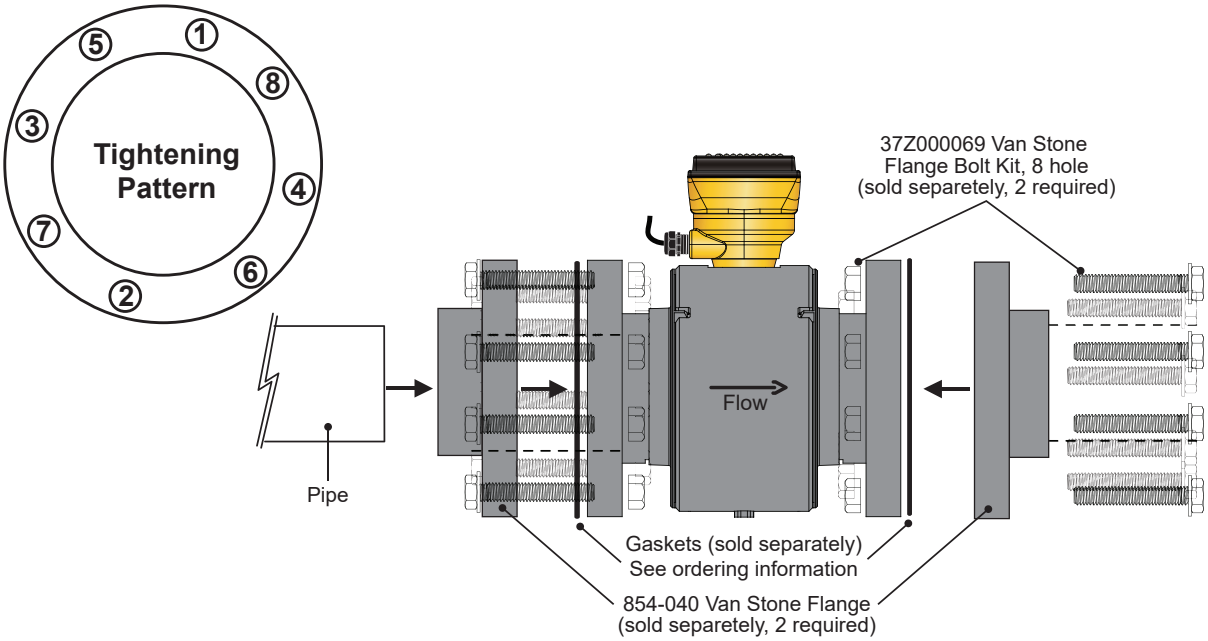

Installation of Flow Sensors: Magnetic

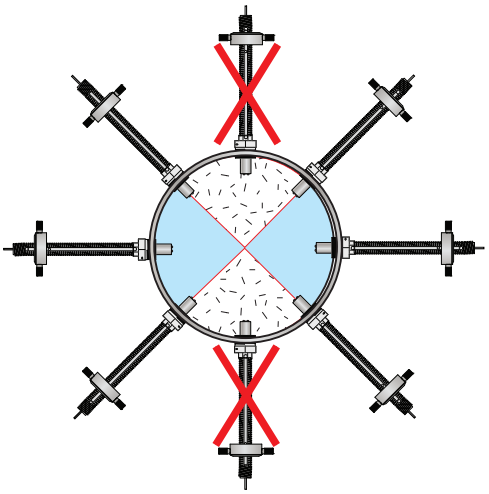

12 o'clock and 6 o'clock position not recommended

Magnetic Flow Sensors

- All mounting angles are acceptable for these sensors if the basic parameters are met: the pipe must be full with no entrapped air.
- On horizontal pipe runs, sensor may be mounted in any position around the pipe. If air bubbles or sediments are expected, mount at a slight angle.
- On vertical pipe runs, sensor may be mounted in any orientation with UPWARD flow preferred to ensure a full pipe.

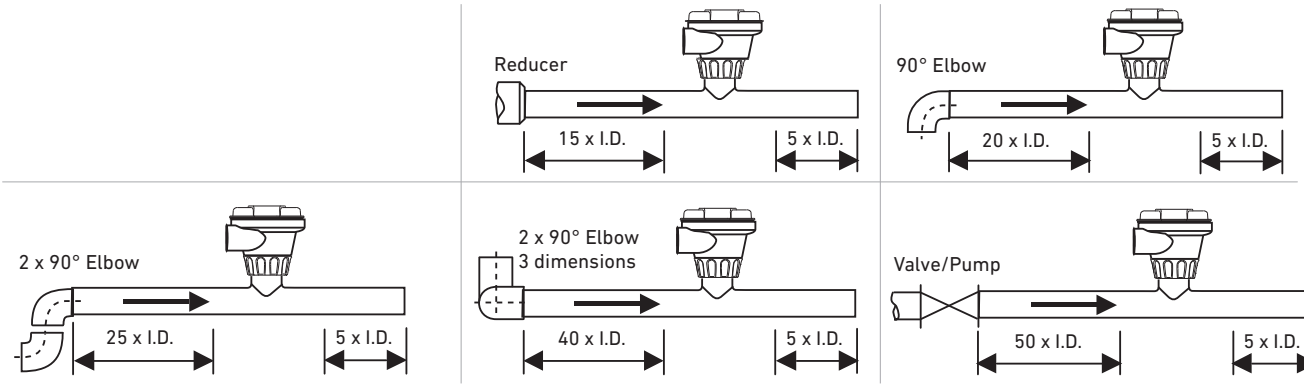

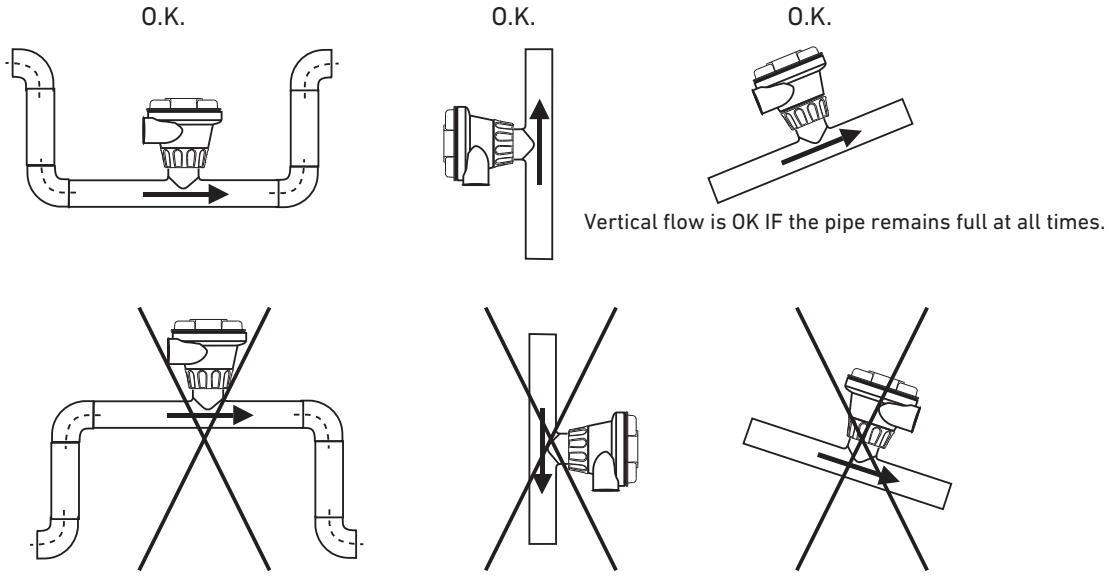

Installation of pH/ORP Electrodes

I. Submersible Installation

2724-2726/2734-2736/2764-2767/2774-2777 with 2751/2760 preamplifier

Sensors are designed to install in tanks by attaching conduit to the ¾ inch threads at the top of the accompanying preamplifier or sensor electrodes. Installing a sensor can simply be done by following these steps:

1) The O-ring at the top of the electrode fits very tightly into the preamplifier. Use a small amount of lubricant (non-petroleum based) to assist the assembly.
2) To prevent moisture from migrating into the preamplifier, backfill the conduit with 3 to 4 inches of sealant.
3) Mount electrodes in a location with ample clearance to remove them for periodic cleaning and recalibration.
4) Choose a location that keeps the electrode glass completely submerged at all times.

Installation Tips

- Mount the electrode near tank outlet away from reagent addition areas.
- Place the electrode tip in pH 4 buffer during system maintenance or storage to avoid dehydration.
- Sensor should be below the drain level to prevent the sensor from drying out.

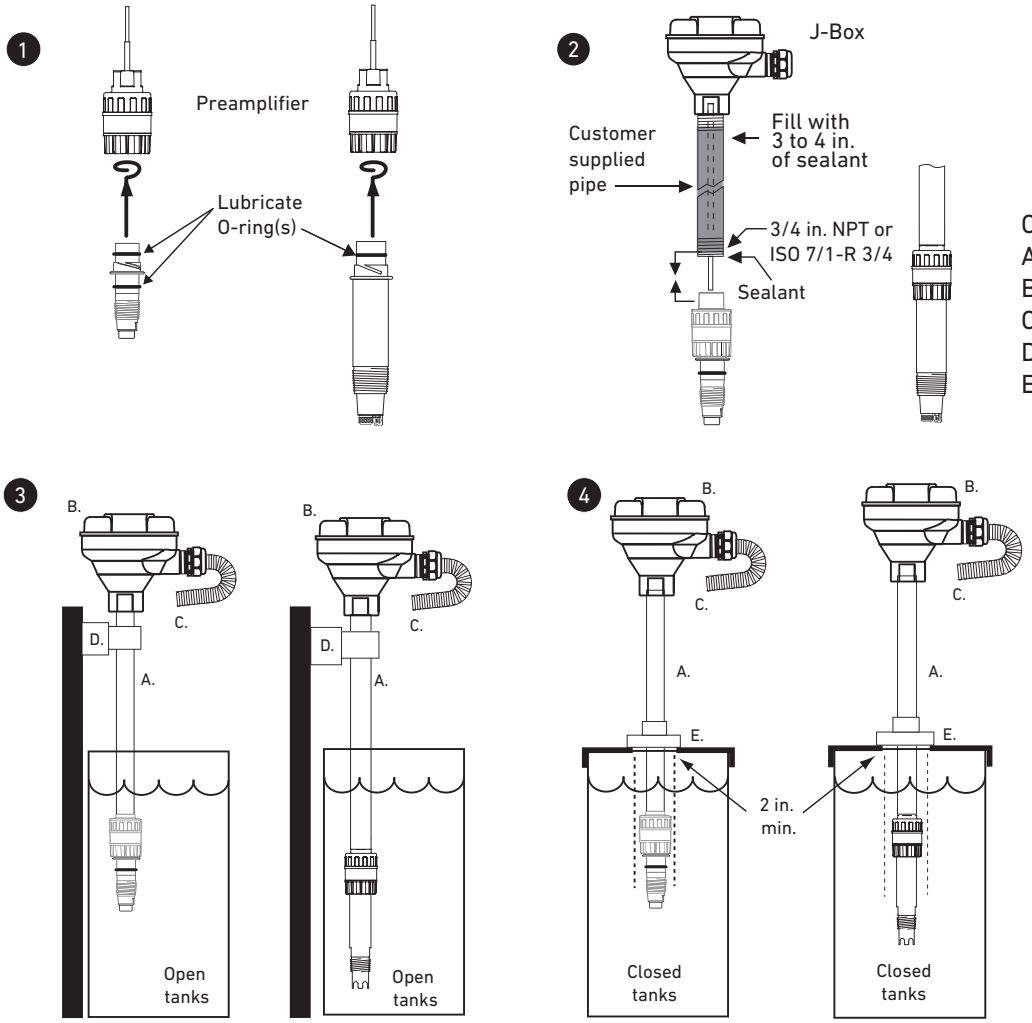

Customer supplied:
A) ¾ in. NPT threaded pipe
B) Signet threaded J-box
C) Flex conduit
D) Quick release pipe clamp
E) Tank flange

Caution: If liquid level is not constant, always ensure liquid contact with electrode tip

Installation of pH/ORP Electrodes

IV. Mounting Angle

Sensor Mounting - Models 2764-2767

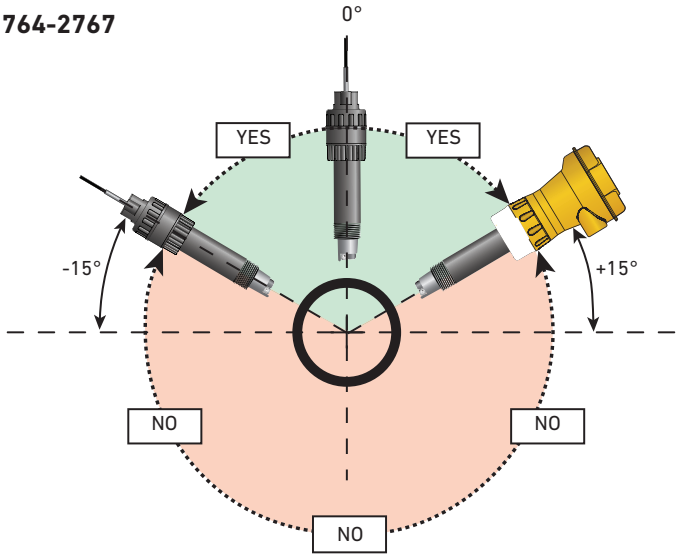

- pH electrodes must be mounted at least 15° from the horizontal to ensure proper sensing. Sensors mounted at less than 15° will impede performance.
- ORP electrodes may be mounted at any angle without affecting the performance.

Sensor Mounting - Models 2724-2726, 2734-2736, 2774-2777

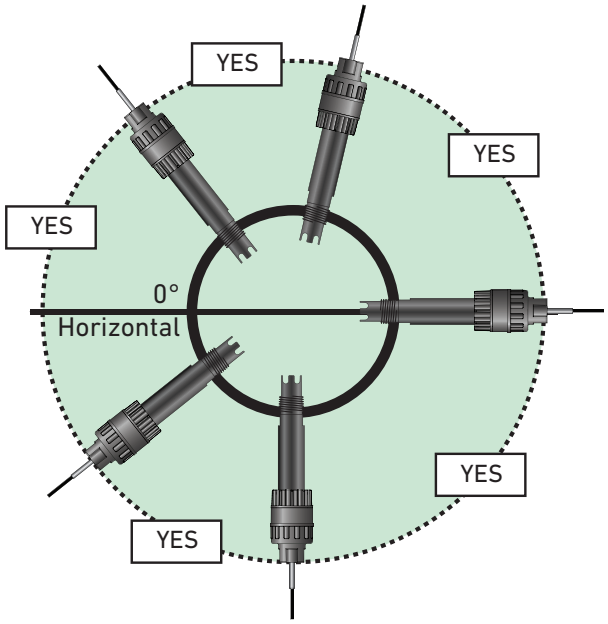

- Models 2724-2726, 2734-2736 and 2774-2777 may be mounted at any angle without affecting the performance.
- Avoid the 12 o'clock position.
- In the presence of sediment, avoid the 6 o'clock position.

Installation of pH/ORP Electrodes

V. 3719 Wet-Tap Overview

a) 3719 pH/ORP Wet-Tap
b) Low Profile PP Clamp-on Saddle Fitting (customer supplied)
c) 275X-WT and 275X-WTP DryLoc® pH or ORP Electrode ("DryLoc" refers to the electrode connector style)
d) 2751/2760-11 DryLoc® pH/ORP Sensor with J-Box
e) Output signal options:
- digital (S^3L)
- 4 to 20 mA

All of these components are sold separately.

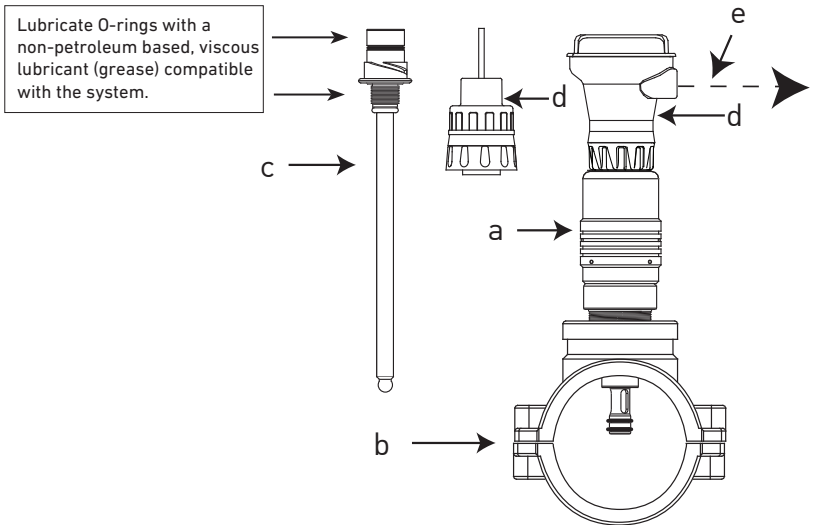

3719 pH/ORP Wet-Tap Installation

- Initial installation must be performed under non-pressurized conditions.
- The 3719-11 has a 1½ in. NPT process connection for use with accessory saddle fittings from 2½ to 4 in.
- The 3719-21 has a 2 in. NPT process connection for use with accessory saddle fittings from 6 to 12 in.
- It is possible to install the 3719 into pipe sizes below 2½ inches by creating a "flow cell" with standard piping components.
- One simple solution, using a GF SCH 80 PVC tee and reducer bushings, is illustrated below.
- Avoid the entrapment of air inside the flow cell.
- Model 3719-12 has an ISO 7/1-R1.5 process connection to fit pipe sizes DN65 to DN100. Installation fittings are customer supplied.
- Model 3719-22 has an ISO 7/1-R2 process connection to fit pipe sizes DN150 to DN300. Installation fittings are customer supplied.

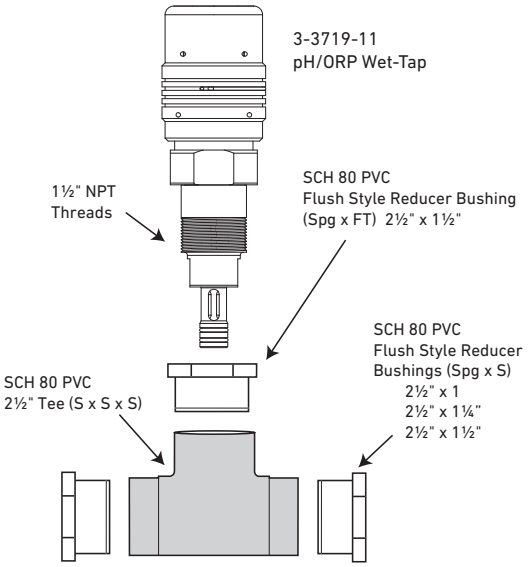

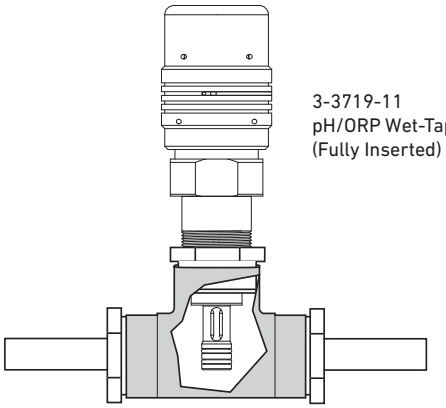

For installation into pipe sizes below 2½ inch, insertion depth of electrode requires use of 2½ inch fitting with reducers.

Installation Tips

- Provide 0.5 m (20 in.) minimum clearance from the top of the pipe for electrode removal.
- The 3719 can be mounted in any orientation, including horizontal and inverted.
- Use caution when removing inverted sensors. Residual fluid may be present in the retraction housing.
- Keep electrode connector clean and dry at all times.
- For reliable in-line measurements of pH and ORP, it is imperative to position the electrode tip into the process stream.
- Because of its compact "short stroke" design, the 3719 requires low-profile fittings to assure proper positioning in pipe sizes DN65 to DN300 (2½ to 12 inches).
- It is strongly recommended to use the low profile PP clamp-on saddle fittings.

Installation of pH/ORP Electrodes

VI. 3719 pH Wet-Tap Electrode Installation

The 3719 can be mounted in any orientation, including horizontal and inverted (shown here with both 2760-11 preamplifier and 2751-1 or -2 Sensor Electronics).

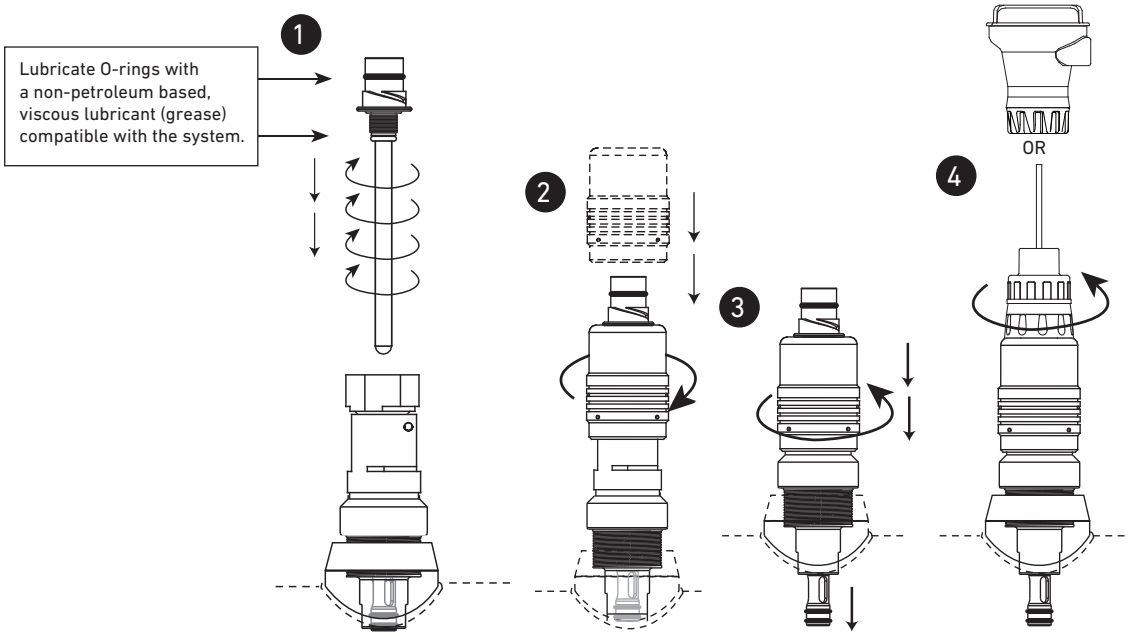

1. Slide electrode (DryLoc®) straight down into electrode piston. Thread electrode into place until connector shoulder is flush with top of electrode piston. Hand tighten only.
2. Place the Locking Shroud over electrode; turn 1/4-turn clockwise to unlock the piston, then press down firmly on the Locking Shroud to lower the electrode piston into the pipe.
3. Turn the Locking Shroud 1/4-turn counterclockwise to lock the piston.
4. Install the 2751 or 2760 DryLoc pH/ORP Sensor electronics onto the electrode connector (see individual operation manuals for more detail).

VII. 3719 Wet-Tap Mounting Angle

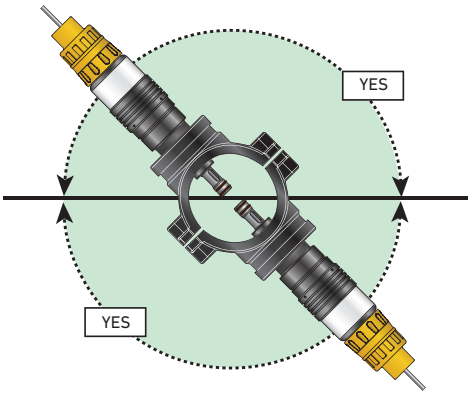

- The 3719 can be mounted in any orientation, including horizontal and inverted.
- Avoid the 12 o'clock position.
- In the presence of sediment, avoid the 6 o'clock position.

Installation of Conductivity/Resistivity Electrodes

I. Submersible Installation

2819 to 2823/2839-1 to 2842-1 with 2850 Sensor Electronics

- Electrode with 2850 Sensor Electronics shown below.
- All mounting brackets, electrical conduits, and pipe extensions are customer supplied.
- Sensor Models 2819-2823 are mounted similarly, except use a ¾" MNPT Thread to mount to a ¾" FNPT pipe thread (customer supplied).

1

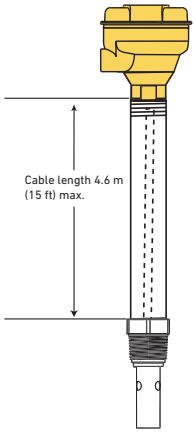

Use a 2850-52 to transmit a (S^3L) signal to a 9900 or 8900

Use a 2850-52 to transmit a 4 to 20 mA signal more than 305 m (1,000 ft)

2

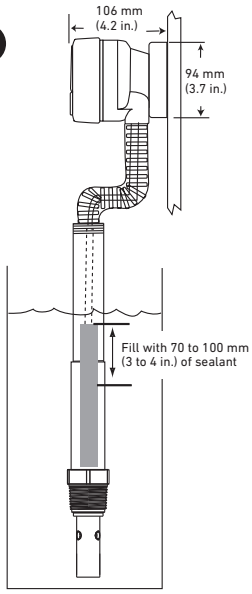

Use a 9900 and proper accessories to allow a local display.

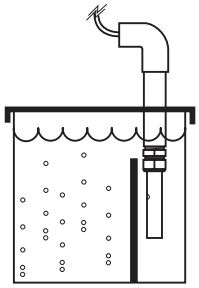

150 300 300
Universal Sensor Adapter
(See page 232)

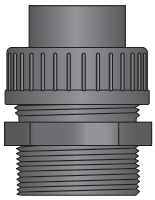

Installation Tips

- In aerated vessels install the electrode in a stilling well to prevent air from being trapped inside the electrode.

II. In-Line Installation

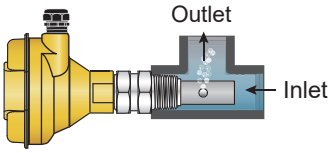

3/4" tee install directly into threaded tee

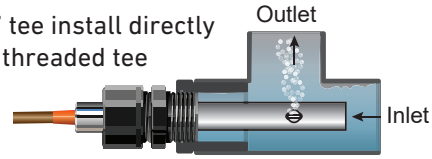

2819, 2820

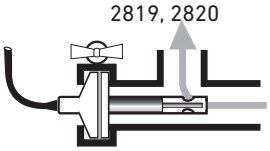

Gasket & Clamp not supplied

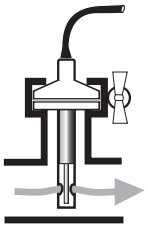

2821

- Conductivity/Resistivity electrodes can be installed into standard ¾ in. NPT fittings or ISO 7/1-R 3/4 threaded fittings.
- The preferred installation for in-line applications directs flow straight into the electrode. This configuration reduces the probability of entrapped air bubbles, and provides the best continuous sampling of the fluid content.
- If the electrode is mounted vertically in a tee, do not recess the orifices inside the tee. Mounting upside down may help prevent air entrapment.
- At least 4 threads (ANSI B1.20.1) must be engaged to meet pressure rating per published specifications.

Tri-clamp Connections

- Models 2819-2821 are offered with 1 to 1½ in. and 2 in. sanitary fittings.

Installation of Temperature Sensors

I. Submersible Installation

- Use the 2350 sensor with 4.6 m (15 ft) cable.
- Mount the sensor to an extension pipe or watertight conduit using thread sealant.
- Use a cable gland at the top of the extension to prevent moisture intrusion/accumulation inside the pipe.

Installation Tips

- 8050-1 and 8052-1 junction boxes can be useful for this installation option.

- For additional defense against possible accumulation of condensation at the back seal area of the sensor, fill the lower 75-100 mm (3-4 inches) of conduit or extension pipe with a flexible sealant such as silicone.

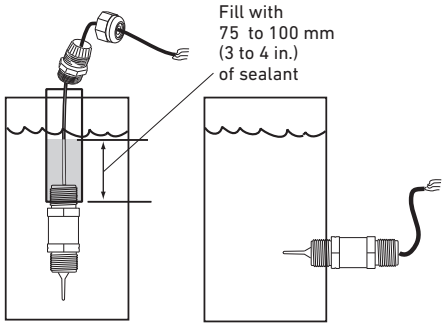

II. In-Line Installation

- The 2350 can be mounted in a pipe-tee using the threads closest to the sensing end.
- The sensor can be mounted with or without an integral kit. This kit mounts a junction box to an instrument.

- See below for more information on instrument integral mount and junction box/remote mount examples.

Integral Assembly

- The 3-8052 Integral Kit connects the 8350 Temperature Transmitter directly onto the 2350 sensor.
- Apply sealant or PTFE tape to the process connection threads, after inspecting threads to ensure integrity. Do not install a sensor with damaged threads.
- Tighten the sensor 1½ turns past finger tight into the process connection.

Installation Tips

- Sensors can be mounted into any DN20 (¾ in.) FNPT pipe tee (customer supplied)

Remote Assembly

- The optional 3-8052-1 Integral Junction Box with ¾ in. process connection offers a convenient terminal point to extend the 2350 cable over a distance.

The kit includes:

- ¾ in. NPT process connection
- Conduit base and cap with junction terminals
- 3-9000.392-1 liquid tight connector, ½ in. NPT

- Apply sealant or PTFE tape to the process connection threads, after inspecting threads to ensure integrity. Do not install a sensor with damaged threads.
- Tighten the sensor 1½ turns past finger tight into the process connection.

150 300 300
Universal Sensor Adapter
(See page 232)

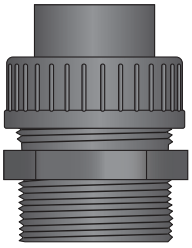

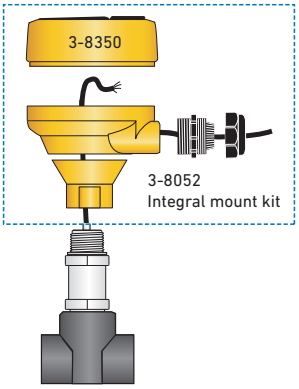

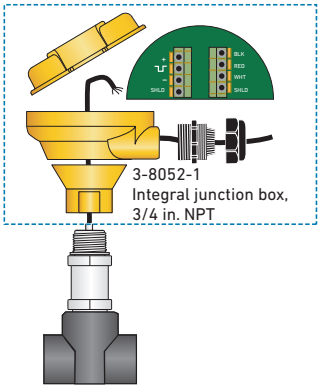

Installation of Pressure/Hydrostatic Level Sensors

I. Submersible Installation

- Use the 2450 and 2250 sensors with 4.6 m (15 ft) cable and 10 m (32.8 ft).
- Mount the sensor to an extension pipe or watertight conduit using thread sealant.
- Use a cable gland at the top of the extension to prevent moisture accumulation inside the pipe.
- For 2450 sensors: DO NOT hermetically seal (i.e. applying silicone sealant or epoxy) the back of sensor. This may introduce measurement errors resulting from changes in atmospheric pressure and/or temperature. Instead, use a 2250 which has an extended atmospheric breather tube (same length of sensor cable). Do not to pinch breather tube.

The Signet 2450 Pressure Sensor with union connection or ¾ in. NPT can be mounted side-tank. (Side mount not recommended)

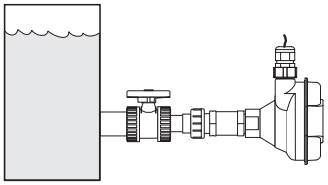

Signet 2450 Pressure Sensor

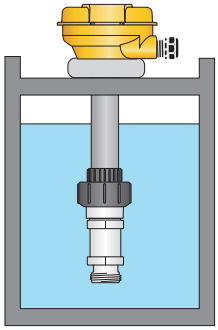

Signet 2250 Hydrostatic Level Sensor

II. In-Line Installation

- The 2450 can be mounted in a pipe-tee using the threads closest to the sensing end.
- The sensor can be mounted with or without an integral mount kit. This kit mounts a junction box or an instrument.
- See below for more information on instrument integral mount and junction box/remote mount examples.

Installation Tips

- 8050-1 and 8050-2 junction boxes can be useful for this installation option.

Integral Assembly

The 3-8052 Integral Kit connects the 9900-1 Pressure Transmitter directly onto the 2450 sensors.

- Use the 2450 sensor with 15.2 cm (6 in.) cable and digital (S^3L) output.
- Apply sealant or PTFE tape to the process connection threads, after inspecting threads to ensure integrity. Do not install a sensor with damaged threads.
- Tighten the sensor 1½ turns past finger tight into the process connection.

Installation Tips

- Sensors can be mounted into any DN20 (¾ in) FNPT pipe tee (customer supplied)

Remote Assembly

The optional 3-8052-1 Integral Kit with Junction Box and ¾ in. NPT sensor connection provides a convenient terminal point to extend the 2450 and 2250 cable over a distance.

The kit includes:

- ¾ in. NPT sensor connection
- Conduit base and cap with junction terminals
- 3-9000.392-1 liquid tight connector, ½ in. NPT

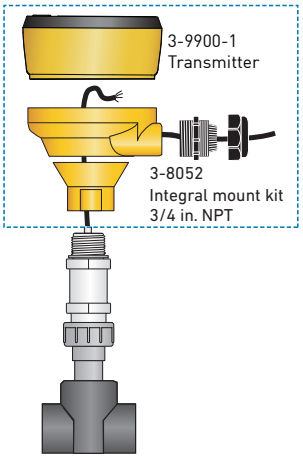

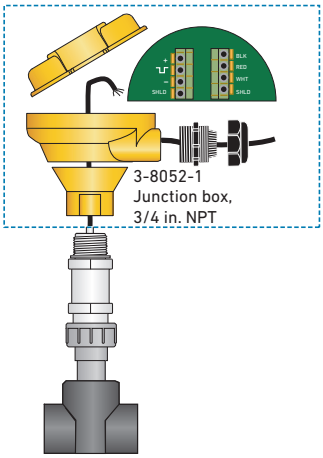

Installation of Chlorine

Sensor Installation - System Startup

All new chlorine and pH sensors require calibration during the start up of a system and also throughout the life of the sensor. A new chlorine sensor requires a 4-hour conditioning period with power on and water flowing past the sensor prior to calibration. See the 4630 manual for chlorine calibration and set up procedure.

If optional pH sensor is not being used, pH must be "hard-coded" into the system. Refer to 4630 manual for manual pH compensation. If optional pH sensor is installed, refer to 4630 manual to calibrate pH electrode.

1. Remove sensor access plugs from the flow cell. If the optional pH sensor is NOT used, do not remove the left-side plug from the flow cell.

2. Install sensor into the electronics (see 4630 manual). Chlorine sensor is installed in the right-side access port, optional pH sensor is installed in the left-side access port.

3. Remove the protective cap from the electrode tip and install the electrode into the flow cell. (Keep the electrode tip cap in a safe place for future use. It is recommend to use the cap to protect the sensor during the removal of the electrode for cleaning or maintenance of the flow cell.).

4. Repeat step 2 and 3 if the optional pH sensor is being used.

5. Install the influent water source to the "Inlet Port" nipple assembly of the flow cell. Install 3/8 inch tubing and secure with a hose clamp (customer supplied).

6. Install 3/8 inch tubing and secure with a hose clamp on the "Drain" port and direct the tube to a proper drain (customer supplied).

7. Verify the inlet and drain ball valves are in the open position and the sample port is in the off position.

8. Turn on the influent water source and check the system for leaks.

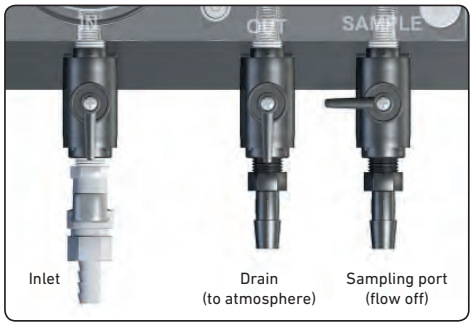

9. Apply power to the system, and allow system to initialize. Calibrate per instructions (See 4630 manual).

10. Calibrate system per instruction manual.
    For greater accuracy it is recommended that the initial calibration of the system is performed in the following order:
    1. Temperature
    2. pH electrode (if optional pH sensor is purchased. If manual pH sensor is selected enter the pH value into the option menu prior to calibrating the chlorine sensor)
    3. Chlorine sensor

Notes:

Wiring Information: Network Device

V. D100 Devicelink Network Frequency and S³L Sensor Wiring

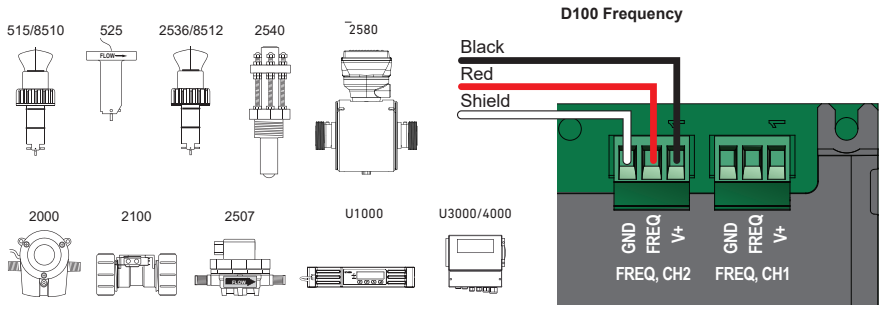

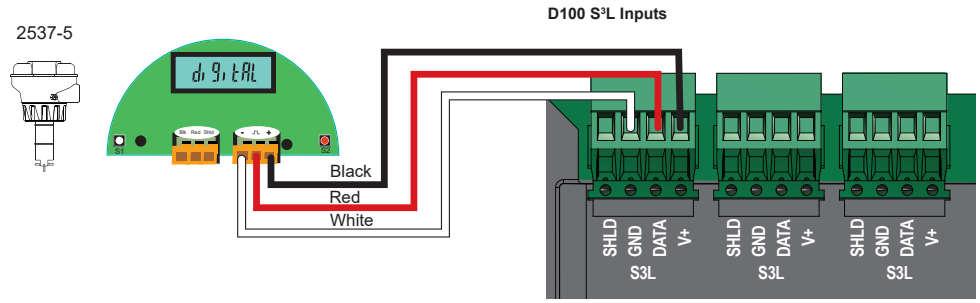

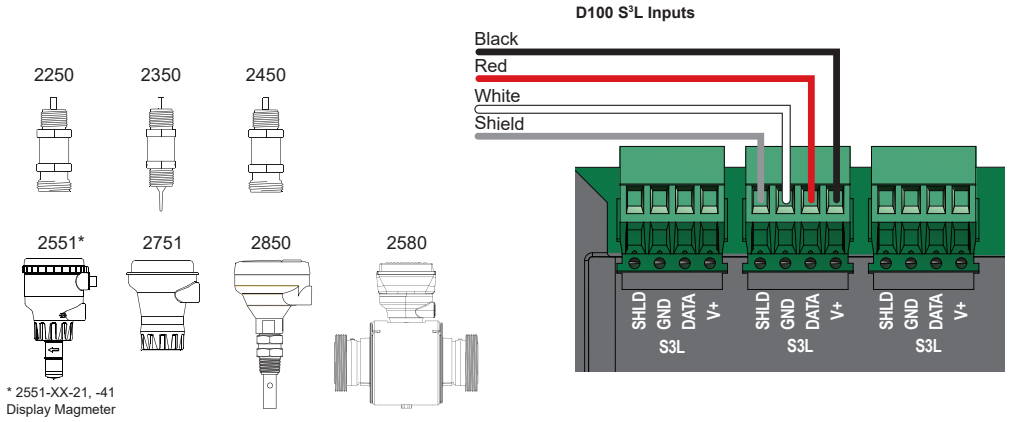

Technical Notes:

- Route sensor cable away from AC power lines.
- On the 515/8510 and 525 installations, connect the silver (shield) wire to earth ground in case of EMI noise interference.
- The 2537 connects to the InstruLink via the Digital (S³L) output.
- Maintain cable shield through cable splice.

Shield Terminal is connected to back plate via upper middle and right mounting hole and lower left mounting hole (Gold plating)

2580 FlowtraMag Meter Requires the use of an external power supply. Do not use the D100 power supply to power the 2580 FlowtraMag Meter.

4 to 20 mA Sensor Wiring

Active loop wiring

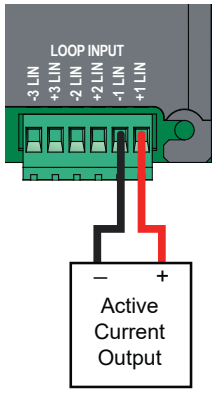

Passive Loop Wiring

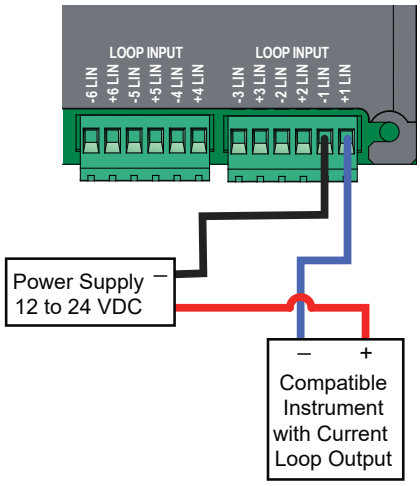

NOTE:
DeviceLink 3-D100-01-XX-XX-XX versions provide **two** 4 to 20 mA Inputs, LIN1, LIN2.

DeviceLink 3-D100-02-XX-XX-XX versions provide **six** 4 to 20 mA Inputs, LIN1 - LIN6.

Wiring Information: Network Device

V. D100 Devicelink Network
4 to 20 mA Output Module Wiring

3-9950.398-2
Dual Channel 4 to 20 mA Module

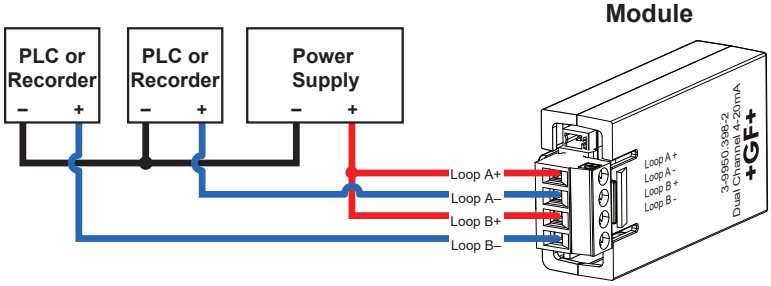

Relay Module Wiring

3-9950.393-1, -2
Relay Module

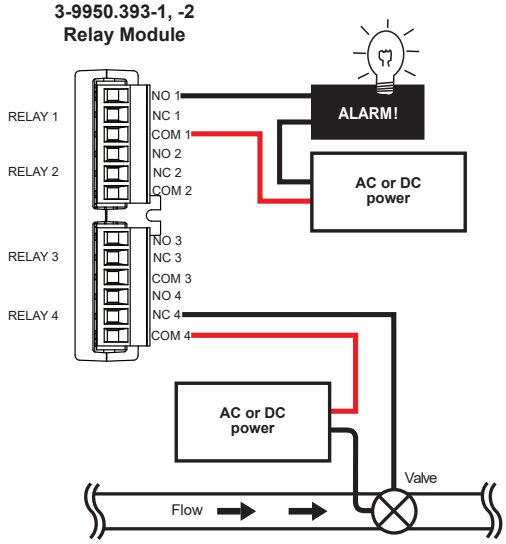

Caution:
Electrical shock hazard exists!

Never connect live AC lines to the instrument.

Mechanical Relays Rating: 5A 250 VAC, 5A 30 VDC

Solid State Relays Rating: 50 mA 30V AC/DC

Power wiring
AC Wiring

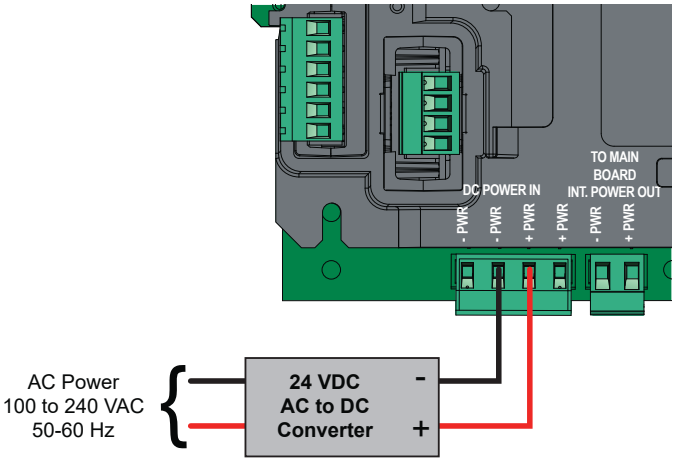

- Do not use extension cords to power the D100.
- Power Cord must be type SJT, SVT, or SJOO. Permanently installed cords must meet IEC 60277 or IEC 60245. Detachable cords sets with IEC 60320 mains connectors are IEC 607999 Certified.
- See grounding information in the product manual.

DC Wiring

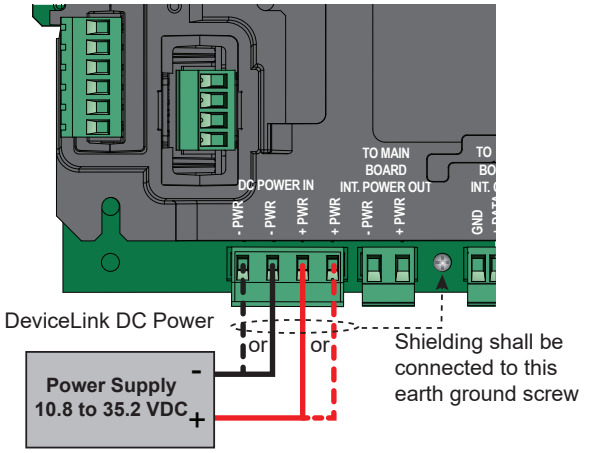

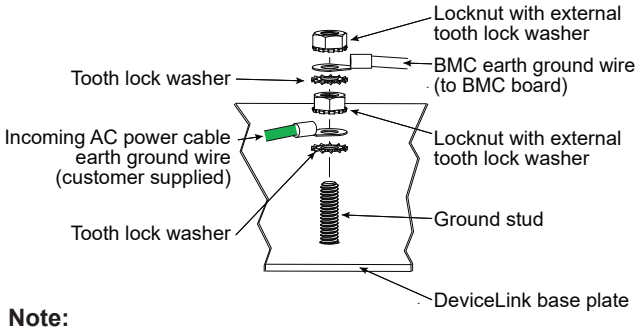

Note:
Please refer to the manual for torque ratings, grounding and installation information.

Wiring Information: Communication Protocols

V. Terminal View

0486 Profibus Concentrator

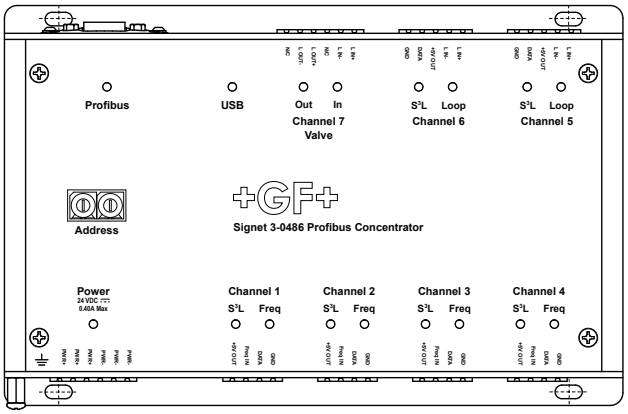

Power - 24 VDC ±10% Regulated

- **PWR -** terminal ports are internally bonded.
- **PWR +** terminal ports are internally bonded.

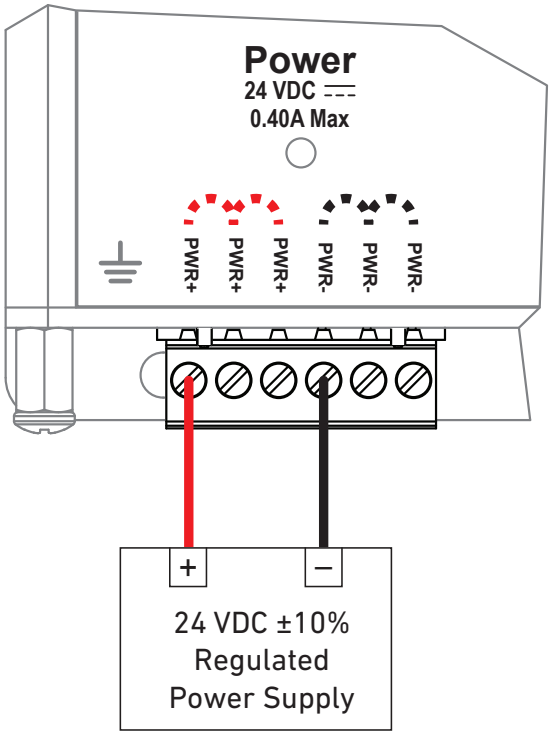

Frequency Flow Sensors (Channels 1, 2, 3, and 4)

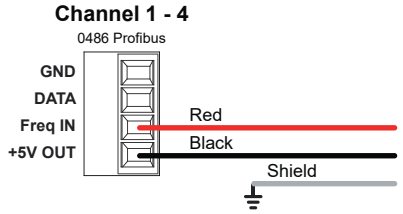

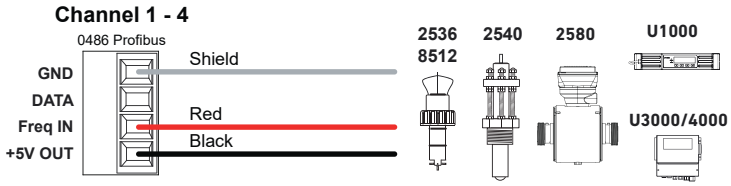

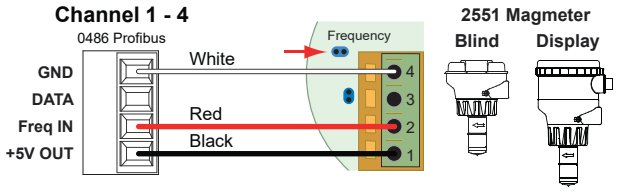

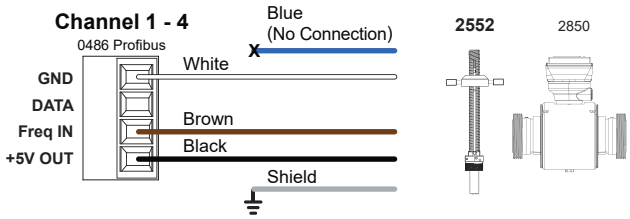

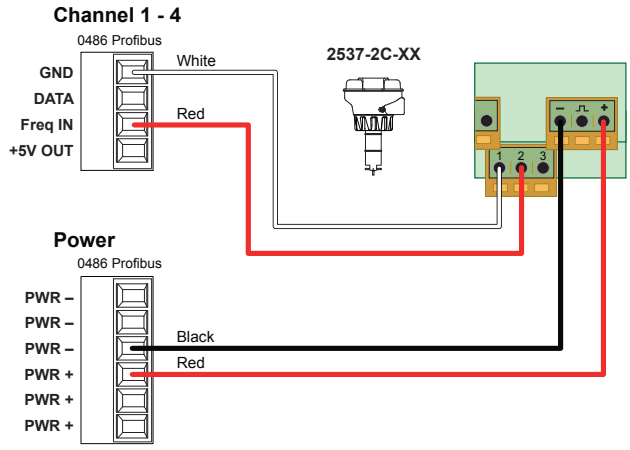

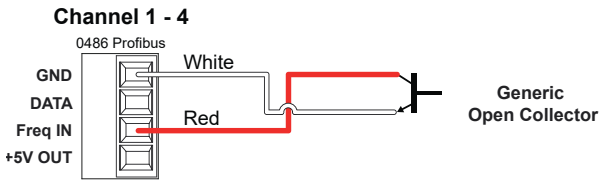

NOTE: Concentrator supplies an internal pull up to 5 volts

Wiring Information: Communication Protocols

V. Terminal View

0486 Profibus Concentrator

Current Loop Input (Channels 5 and 6)

Compatible Devices ..... 4 to 20 mA versions of Signet sensors, other Current Loop devices

NOTE: For 4 to 20 mA versions of Signet sensors, refer to the appropriate manual for wiring instructions.

Channel 5, 6

Active 4 to 20 mA Current Loop Input

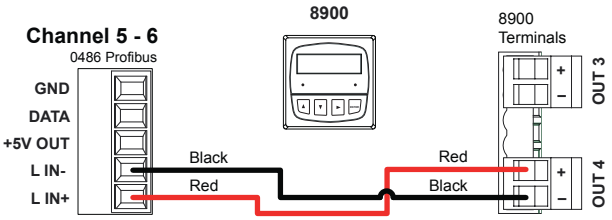

Passive 4 to 20 mA Current Loop Input

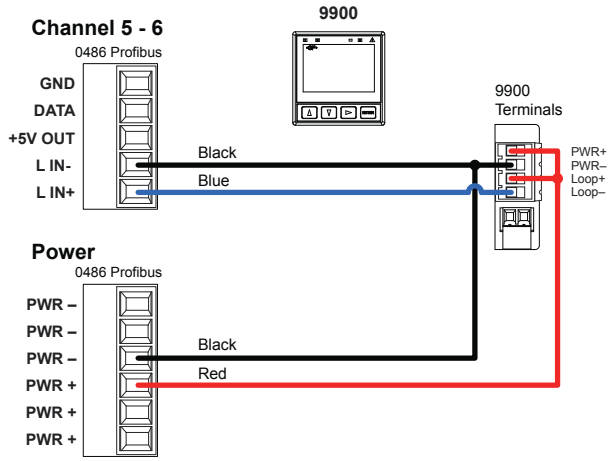

Generic Active 4 to 20 mA Current Loop Input

Generic Passive 4 to 20 mA Current Loop Input

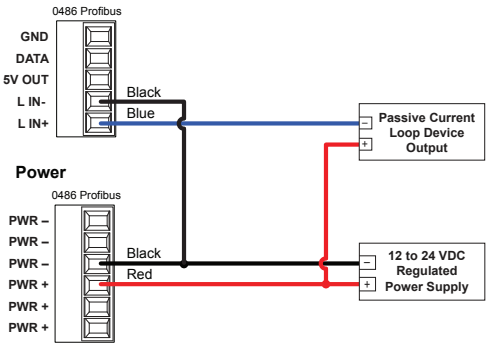

Current Loop Input & Output (Channel 7)

Compatible Devices .....PE-25 (EA21, EA31, EA42), Current Loop Input and Output Devices

Channel 7

Passive Valve Positioner Wiring 199 190 603

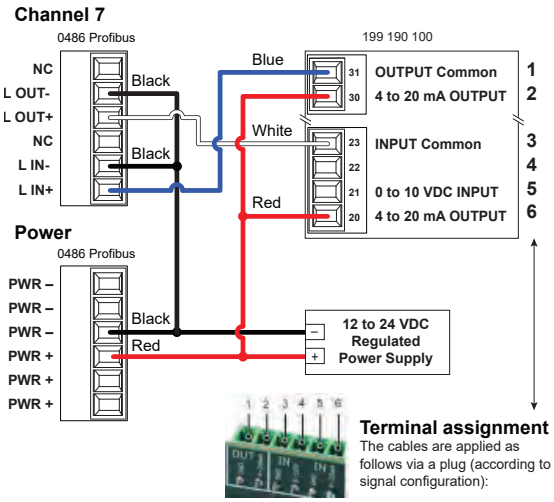

Terminal assignment
The cables are applied as follows via a plug (according to signal configuration):

Terminal 1	Terminal 2	Terminal 3	Terminal 4	Terminal 5	Terminal 6
Ground	4 to 20 mA	Ground	0-10 V	Ground	4 to 20 mA
OUT		IN			

Generic Active Current Loop Input & Output Wiring

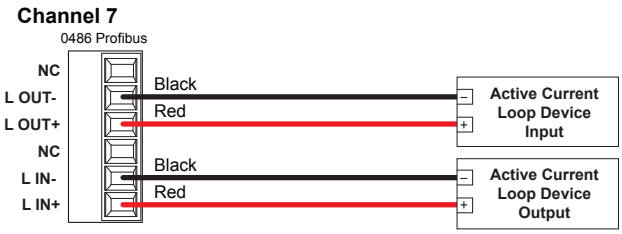

Generic Passive Current Loop Input & Output Wiring

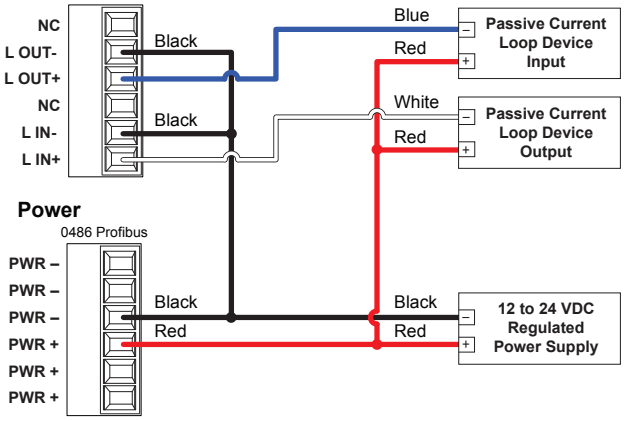

Wiring Information: Communication Protocols

V. Terminal View

0486 Profibus Concentrator

(S^3L) Devices (Channels 1, 2, 3, 4, 5, and 6)

Compatible Sensors:
2250, 2350, 2450, 2551, 2552, 2751, 2850, and 8058

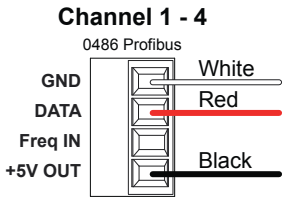

OR

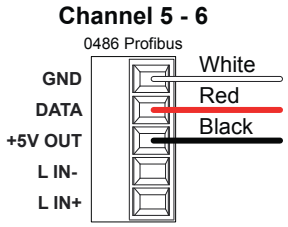

2580 wiring to 0486 Profibus Concentrator

Refer to the 0486 Profibus Concentrator manual for Frequency wiring and programing instructions.

2610-51 Dissolved Oxygen Sensor

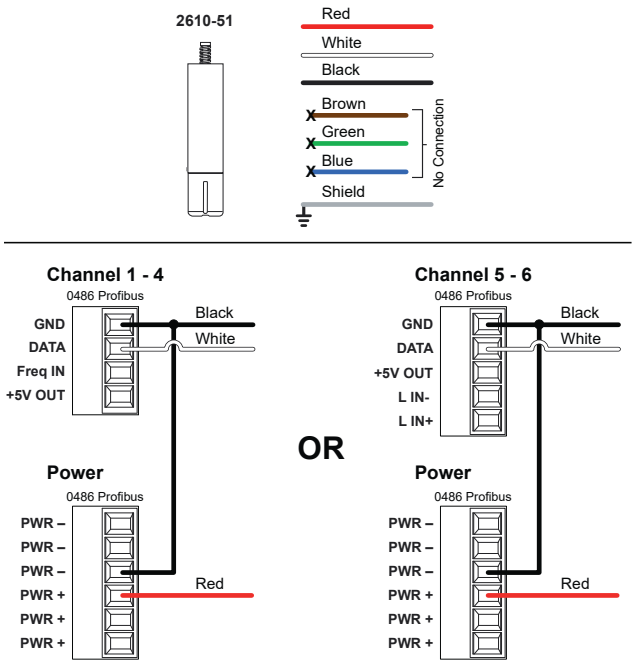

Wiring Information: Communication Protocols

V. Terminal View

0486 Profibus Concentrator

(S^3L) Devices (Channels 1, 2, 3, 4, 5, and 6)

Compatible Sensor: 8059

8059-4AC

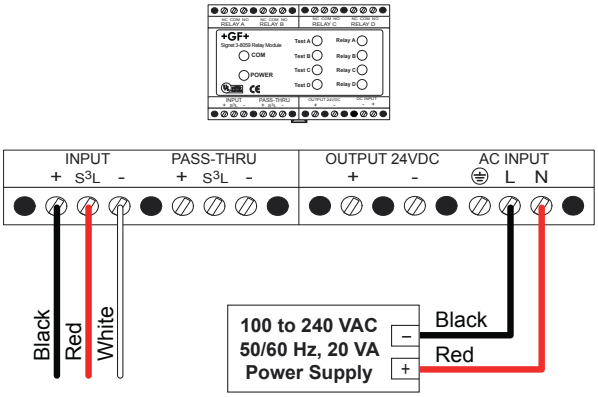

Channel 1 - 4

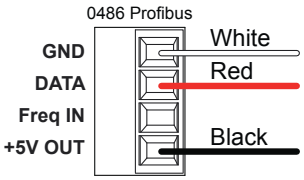

OR

Channel 5 - 6

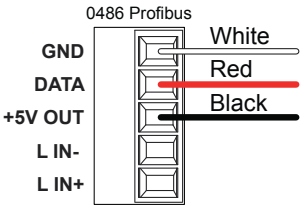

8059-4AC

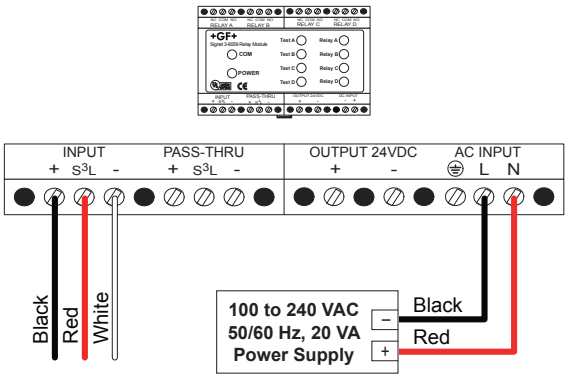

Channel 1 - 4

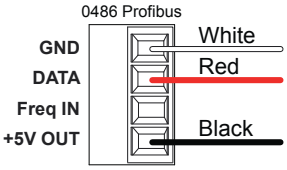

OR

Channel 5 - 6

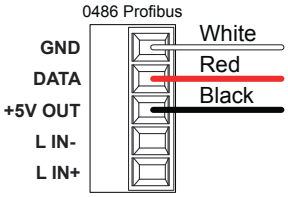

Wiring Information: Sensors

II. Flow sensor cable details and connection to instrumentation

- Most Signet Flow sensors are supplied with a standard 7.6 m (25 ft) length of cable except the 2100 Turbine, which has 4.6 m (15 ft).
- 2551 Magmeters are not supplied with cable.
- 2552 Magmeters supplied with 7.6 m (25 ft) or submersible version with optional 3.9 m (13 ft) or 5.9 m (19.5 ft).
- Sensors with AC sine wave outputs (515, 525) may extend cable to a maximum 60 m (200 ft).
- 2580 Magmeters supplied with 7.6 m (25 ft) for power and 7.6 m (25 ft) for signal out (Frequency/4 to 20 mA)
- Sensors with open collector outputs (2000, 2100, 2507, 2536, 2537, 2540, 2551, 2552, 2580) may extend cable to a maximum 305 m (1000 ft)
- Maintain all cable shielding through splices or terminal connections.
- Cable should be 2 conductor twisted pair with shield, 18 to 22 AWG.
- Signet Flow sensors use cable with Black, Red and Shield conductors. To facilitate wiring, most Signet instruments have wiring terminals that are labeled with these same colors.

Instrument Marking	Sine Wave Output	Sensor Wire Color	Open Collector Output	Instrument Marking
Freq. In Black	Frequency	Black	DC Power +	Sensor Pwr Sensor V+
Freq. In Red	Frequency	Red	Signal Out	Freq. In Sensor In
Iso. Gnd Shld	Ground	Shield (White)	DC Power -	Iso. Gnd Sensor Gnd
	515 525	Sensor models	2000 2100 2507 2536 2537 2540 2551 2552 2580	

Wiring Information: Sensors

II. Flow sensor wiring details for 2537 Flowmeter

Digital (S^3L) Wiring:

The digital (S^3L) output is compatible with the Signet 8900 Multi-Parameter Controller.

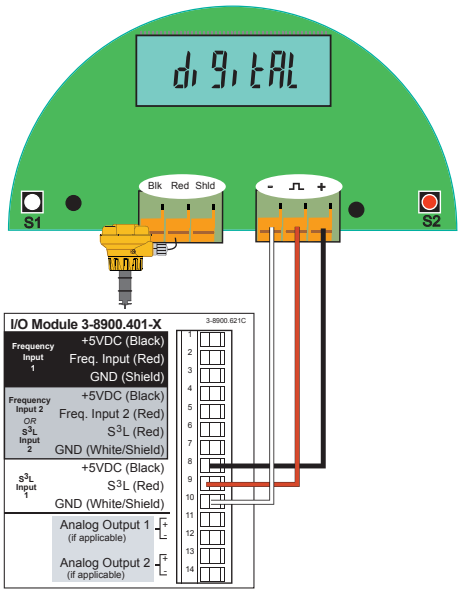

Loop Wiring:

The 4 to 20 mA output can be connected to Chart Recorders, PLCs or any device that requires a 4 to 20 mA signal.

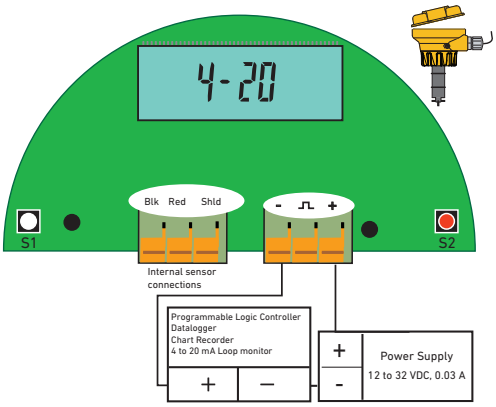

Dry Contact Relay Wiring

The wiring is identical for On-OFF and Pulse modes.

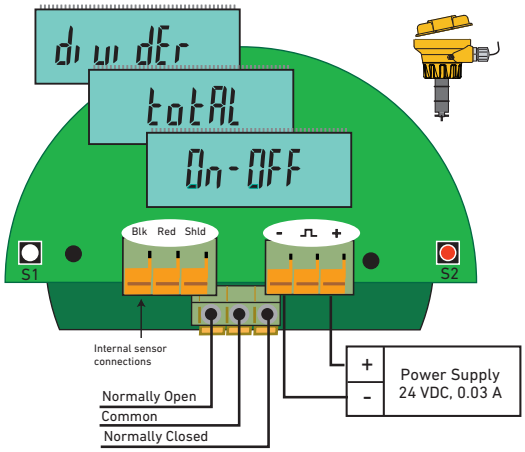

Solid State Relay Wiring

The wiring is identical for On-OFF and Pulse modes.

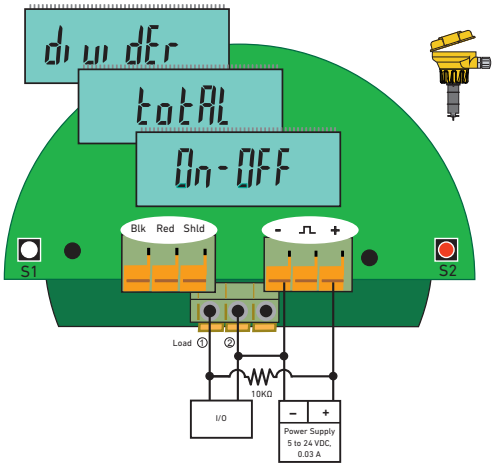

Wiring Information: Sensors

II. Flow sensor wiring details for 2551 Magmeter

Loop Wiring:

The 2551-XX-12 Magmeter is a traditional 2-wire passive 4 to 20 mA loop transmitter. External loop power (24 VDC ±10% regulated) is required.

⚠ The maximum loop resistance the Magmeter can accommodate is 300 Ω.

All 2551-XX-12 Magmeters are shipped from the factory with the 4 to 20 mA output scaled for 0 to 5 m/s (0 to 16.4 ft/s). If this operating range is suitable, no adjustments are necessary.

The 3-0252 Configuration Tool is required to change the operating range.

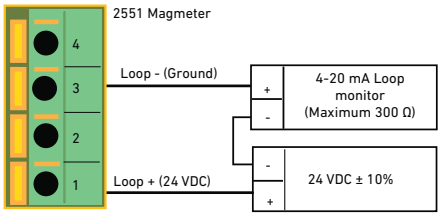

Frequency Wiring:

- When the blue jumper illustrated here is placed over both pins, the 2551-XX-11 outputs an open collector frequency signal that can be connected to any powered Signet flow meter. (Models 8900, 9900, 9900-1BC and 9950).
- 5 VDC power is provided to the 2551 Magmeter by all Signet flow instruments. No additional power is required.
- If connecting the 2551 Magmeter to a flow instrument from another manufacturer, 5 to 24 VDC ±10% regulated power must be provided to the 2551. A 10 KΩ pull up resistor must also be connected between terminals 1 and 2.
- The frequency output will be displayed as positive flow regardless of the flow direction.

Blue Jumper ON = FREQ OUT

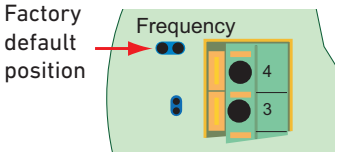

2551 Frequency Out to Signet 8900

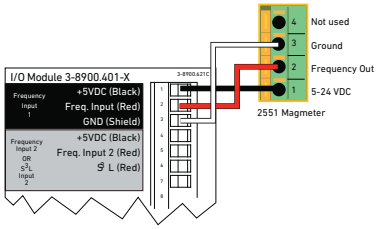

2551 Frequency Out to Signet 9900 or 9950

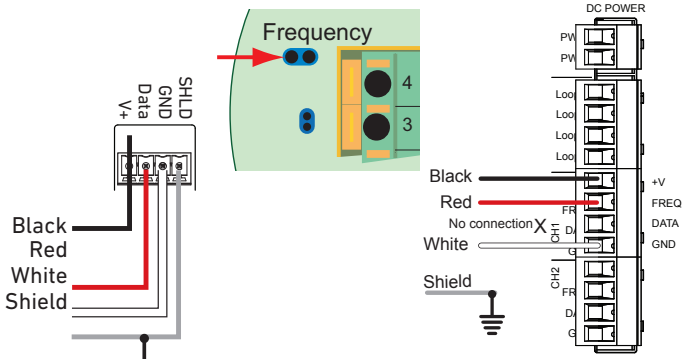

2551 Frequency Out to Other Manufacturer's Equipment

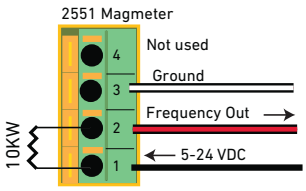

Install a pull-up resistor when connecting the 2551 Magmeter to other manufacturer's flowmeters.

Digital (S^3L) Wiring:

- When the blue jumper illustrated here is removed (or placed over one pin for storage) the 2551-XX-11 outputs a digital (S^3L) signal compatible with the Signet 8900 or 9900.
- The 2551 receives 5 VDC power from the 8900, 9900 or 9950. No additional power is required.
- The 8900 or 9900 will display 0 (Zero) flow rate during periods of reverse flow.
- The maximum cable length from the 2551 to the 8900 or 9900 depends on the 8900 or 9900 configuration. Refer to the 8900 or 9900 manual for complete information.

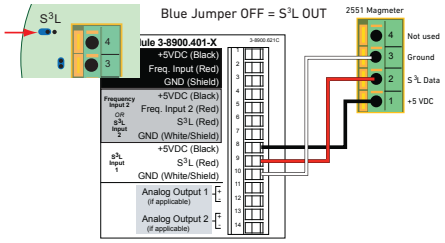

Wiring Information: Sensors

II. Flow Sensor Wiring Details for 2552 Magmeter

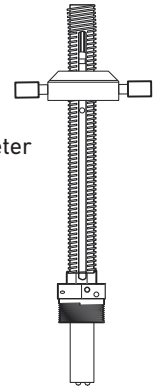

Frequency Wiring:

- The 2552 outputs an open collector frequency signal that can be connected to any powered Signet flow meter. (Models 8900, 9900, 9900-1BC, 9950)
- DC power is provided to the 2552 Magmeter by all Signet flow instruments. No additional power is required.
- If connecting the 2552 Magmeter to a flow instrument from another manufacturer, 5 to 24 VDC power must be provided to the 2552. A 10 KΩ pull up resistor must also be connected between the +V (Black) and the Freq. Out (Red) wires.

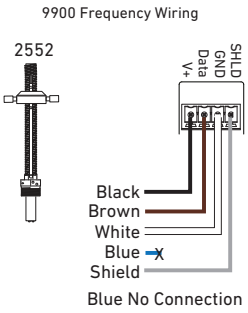

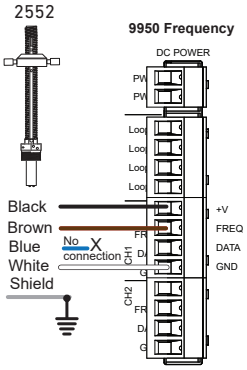

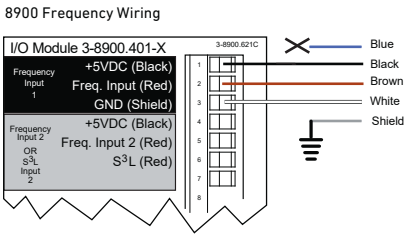

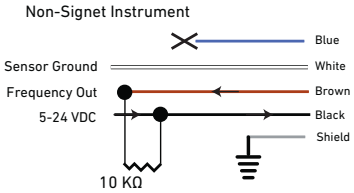

Install a pull-up resistor when connecting the 2552 Magmeter to other manufacturer's flowmeters.

Digital (S^3L) Wiring:

The 2552 receives 5 VDC power from the 8900, 9900 or 9950. No additional power is required.

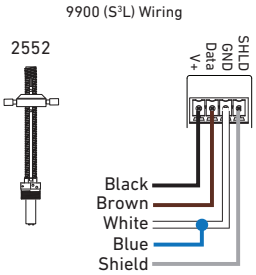

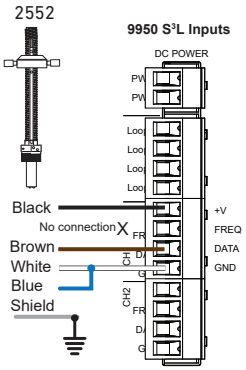

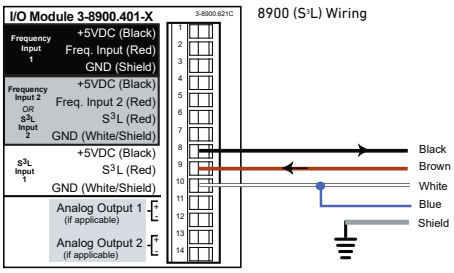

NOTE:
The maximum cable length from the 2552 to the 8900, 9900 or 9950 depends on the 8900, 9900 or 9950 configuration. Refer to the 8900 or 9900 manual for complete information.

Loop Wiring:

The 2552 is a traditional 2-wire passive 4 to 20 mA loop transmitter. External loop power (24 VDC ±10% regulated) is required. Please refer to the Model 7310 Power Supplies.

⚠ The maximum loop resistance the Magmeter can accommodate is 305 Ω.

⚠ The cable length from the Magmeter to the loop monitor cannot exceed 305 m (1000 ft).

All 2552 Magmeters are shipped from the factory with the 4 to 20 mA output scaled for 0 to 5 m/s (0 to 16.4 ft/s). If this operating range is suitable, no adjustments are necessary.

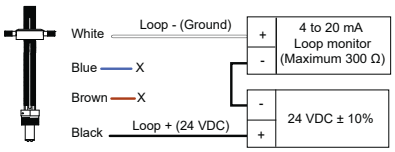

Wiring Information: Sensors

II. Flow Meter Wiring Details for 2580 FlowtraMag Meter

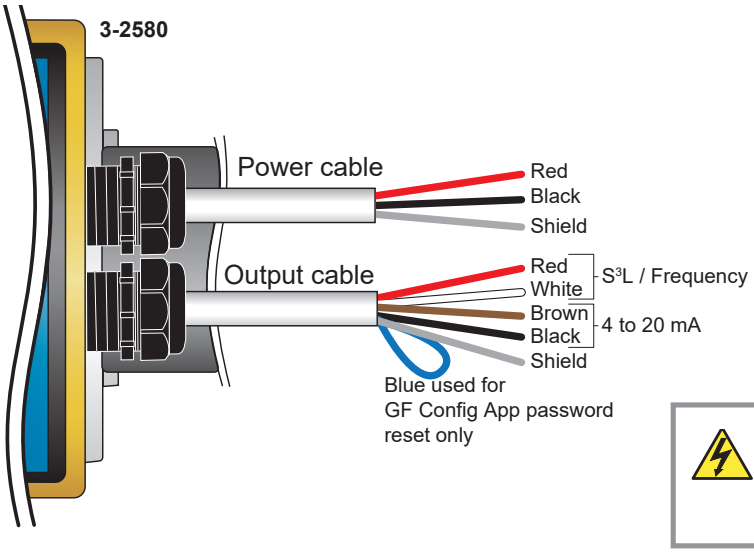

When using the 2580 with frequency or Digital (S^3L), all of the connections from the Magmeter to external equipment (PLC, Datalogger, Chart Recorder, Flow meter, etc.) are made using the red and white wires. See wiring diagrams for further details.

DO NOT REMOVE WIRING!

Damaging or removing the power or output cables will void warranty.

Power Wring

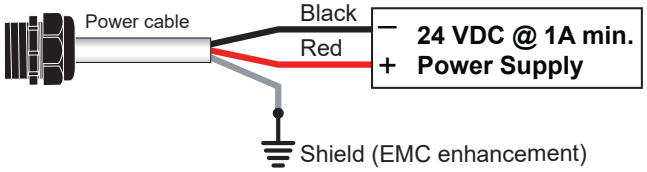

CAUTION!

Turn off Power before Wiring.

4 to 20 mA Loop Output Wiring

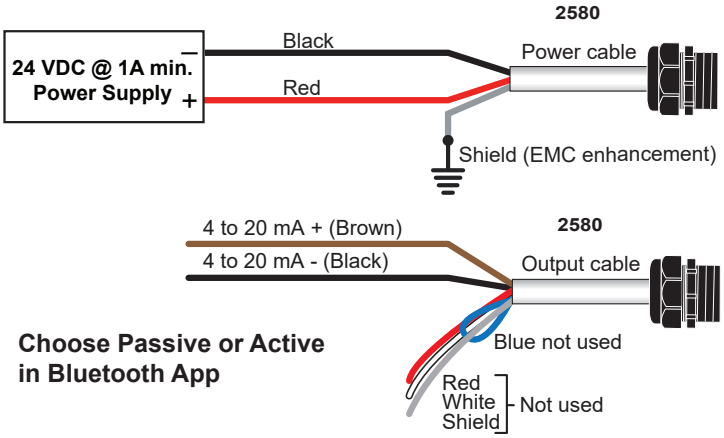

Choose Passive or Active in Bluetooth App

Frequency Output Wiring

Compatible with all POWERED Signet Flow Instruments

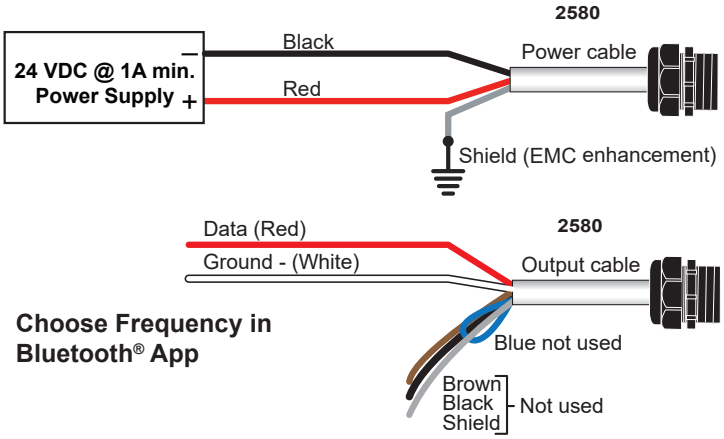

Choose Frequency in Bluetooth® App

- When choosing Frequency in the Bluetooth® App, the 2580 outputs an open collector frequency signal that can be connected to any powered Signet flow meter (models 8900, 9900, 9900-1BC, 9950) or D100 DeviceLink Network.
- 24 VDC power at 1 amp should always be connected.

NOTE: The frequency output will be displayed as positive flow regardless of the flow direction.

Wiring Information: Sensors

II. Flow Meter Wiring Details for 2580 FlowtraMag Meter

Digital (S^3L) Output wiring

2580 Wiring to Signet 8900 - Two digital (S^3L) inputs

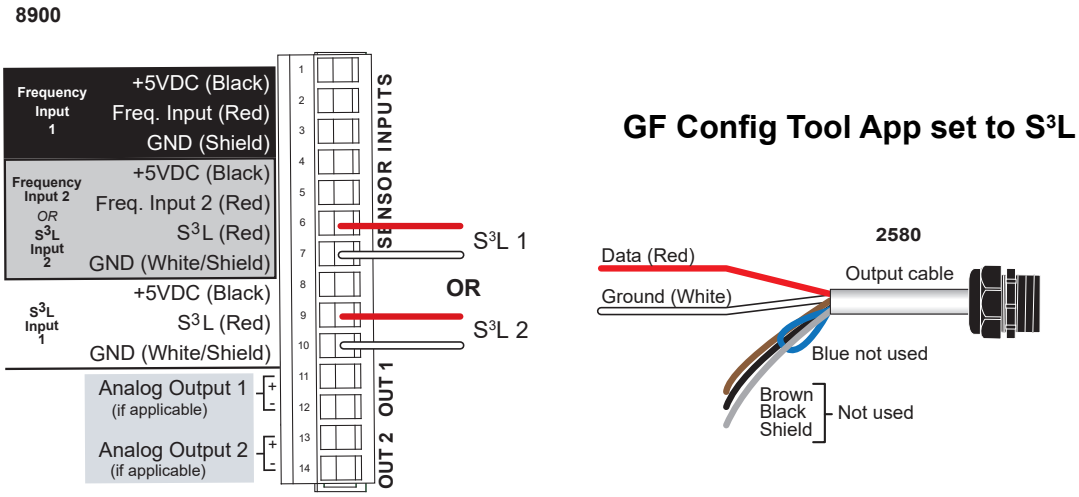

2580 Wiring to Signet 8900 - One digital (S^3L) input and one Frequency input

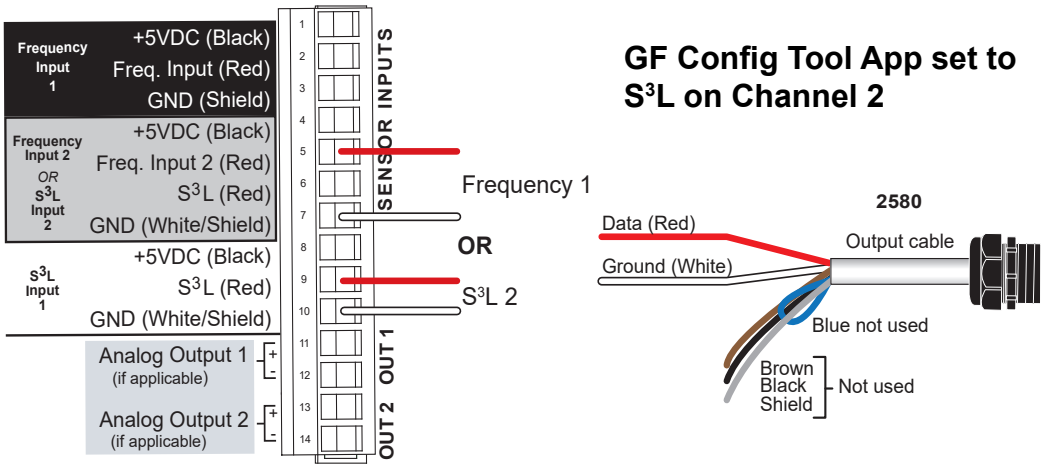

2580 Wiring to Signet 0252 Configuration Tool

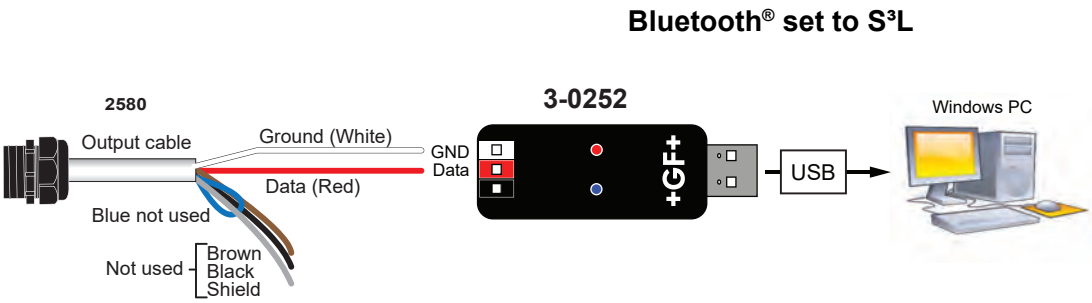

Wiring Information: Sensors

II. Flow Meter Wiring Details for 2580 FlowtraMag Meter

Digital (S^3L) Output (Compatible with 8900 Multi-Parameter Controller, 9900 and 9950 Transmitter)

- To select S^3L, use Bluetooth® App.
- 24 VDC power at a minimum of 1 amp is always be connected to the 2580.
- **The 8900 will display 0 (Zero) flow rate during periods of reverse flow**
  The 9900 and 9950 will display negative numbers to indicate reverse flow
- The maximum cable length from the 2580 to the 8900 or 9900 depends on the 8900 or 9900 configuration. Refer to the 8900, 9900 or 9950 manual for complete information.

2580 Wiring to Signet 9900

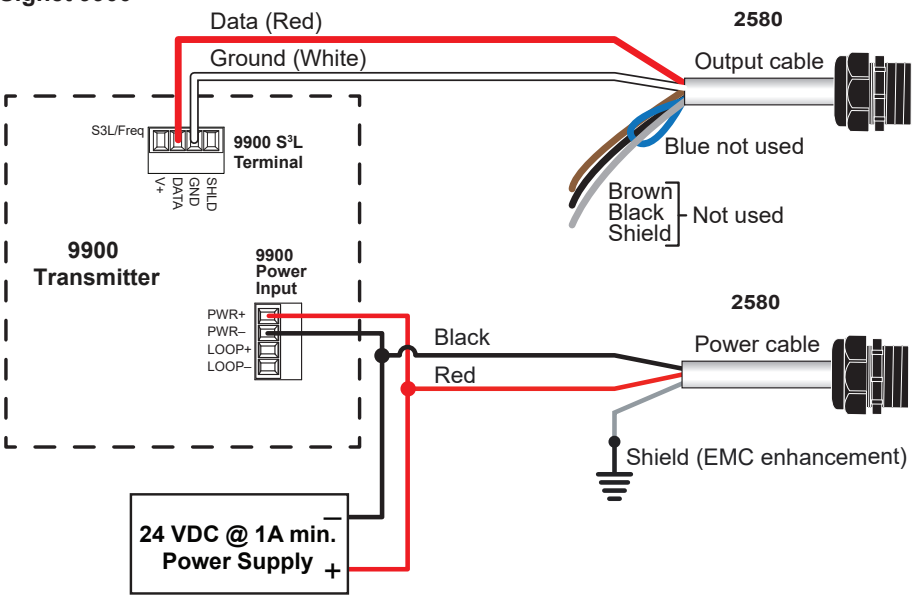

2580 Wiring to Signet 9950

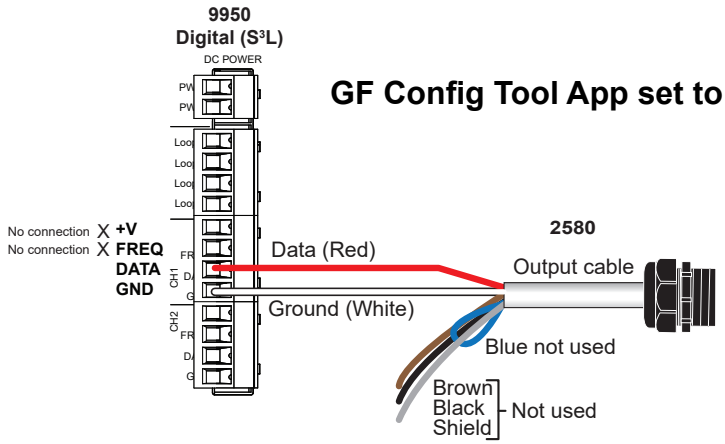

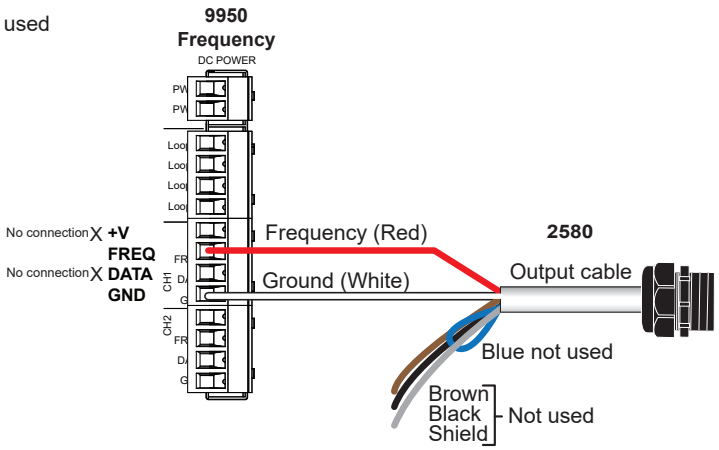

Refer to the 0486 Profibus Concentrator manual for Frequency wiring and programing instructions.

Wiring Information: Electrodes

III. Wiring Connections for pH/ORP

Digital (S^3L) pH/ORP Wiring

2751 In-Line Version with J-Box

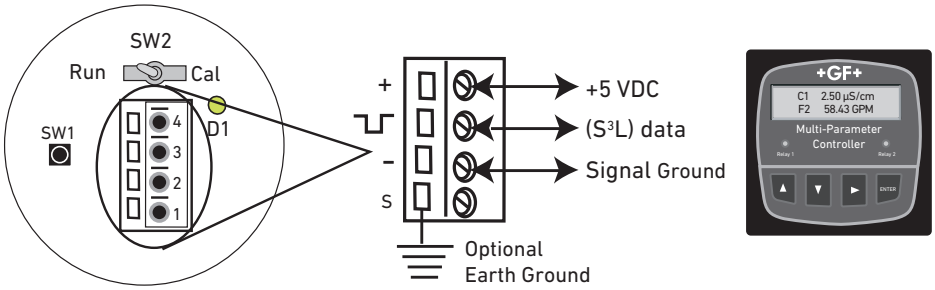

4 to 20 mA Loop pH/ORP Wiring

2751 with J-Box

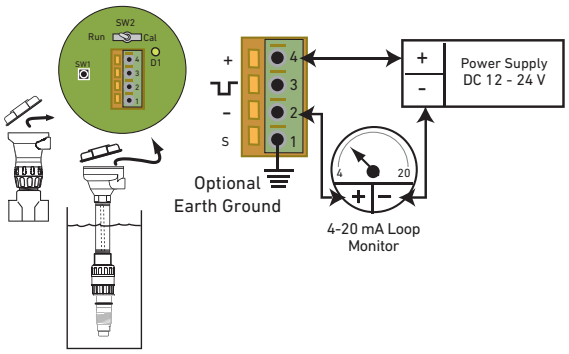

2751 without J-Box

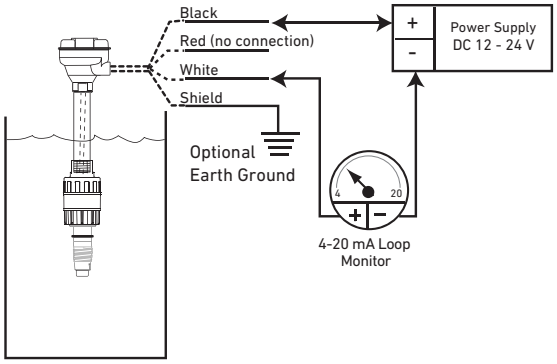

Wiring Information: Electrodes

IV. 2850-52, 4 to 20 mA Output Conductivity/Resistivity Sensor Electronics

4 to 20 mA Conductivity/Resistivity Wiring

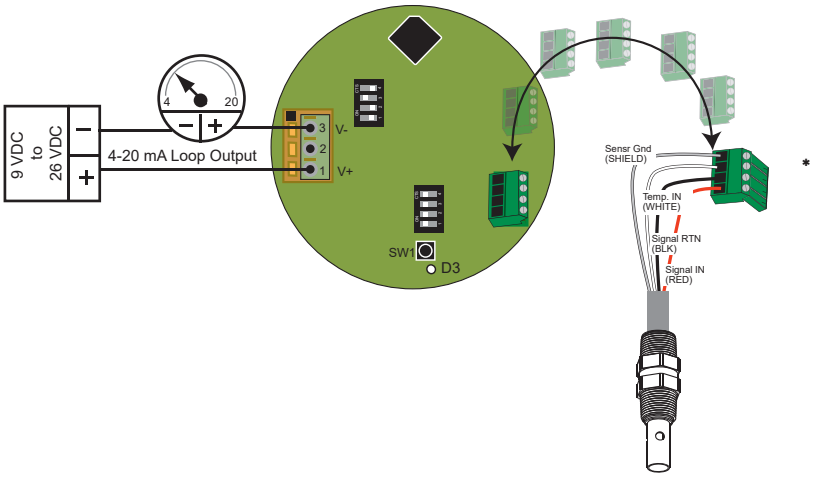

3-2850-51 Digital (S^3L) Output Conductivity/Resistivity Wiring

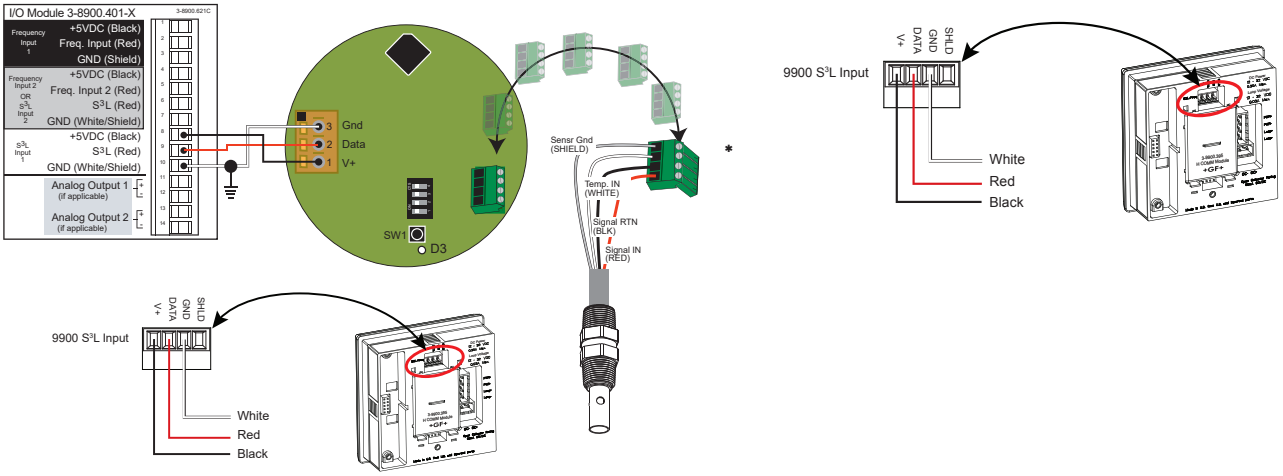

Dual Digital (S^3L) Output Conductivity/Resistivity Wiring

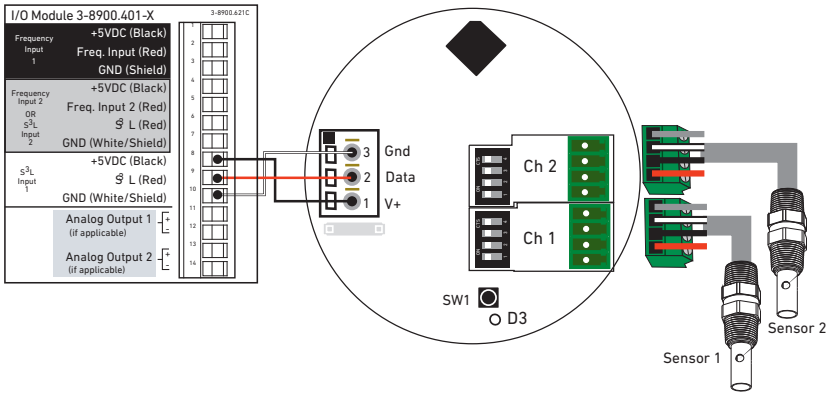

*Note: Under normal operation, the shield wire does not need to be connected, however, in noisy environments, the shield should be connected to improve noise immunity.

Wiring Information: Instruments

V. Rear Terminal Views Signet Flow Instruments

Wiring Information

- The 8150 Battery Powered Flow Totalizer is compatible only with the AC output sensors, 515 and 525. The wiring is shown here. See Operation Manual for more information.

8150 Battery Powered Flow Totalizer

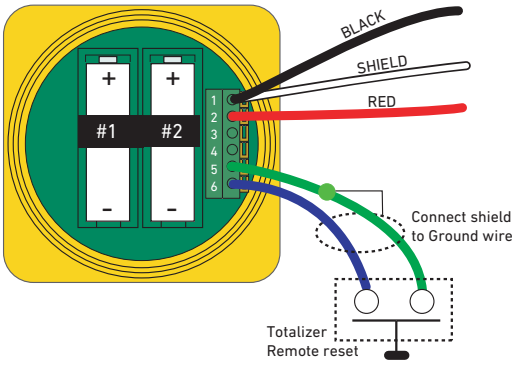

Wiring Information: Instruments

V. Rear Terminal Views Signet Instruments

8900 Multi-Parameter

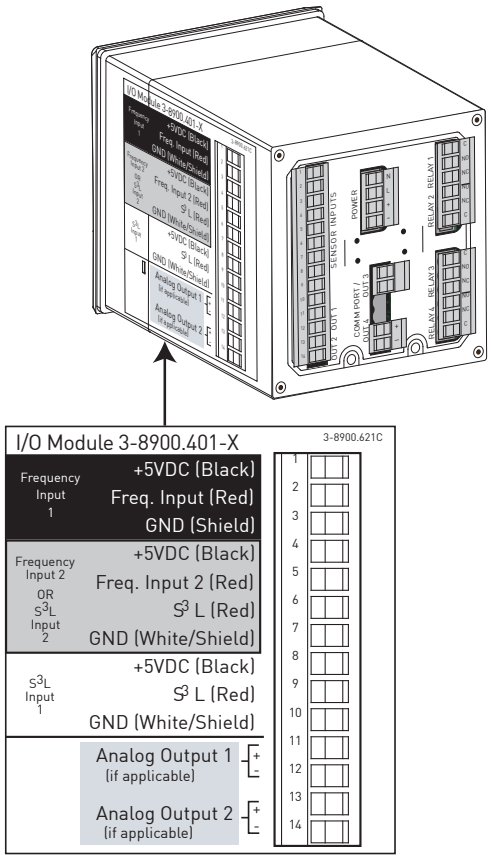

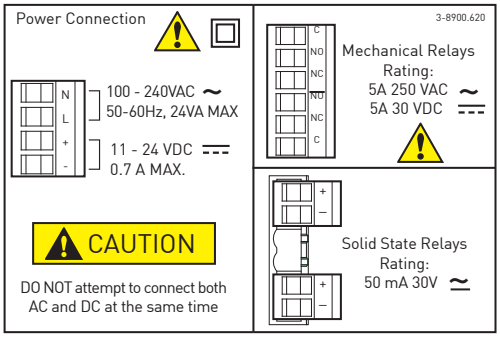

Maximum Cable Lengths for all Sensors used with the 8900
The I/O Module (3-8900.401-x) supports frequency and digital (S^3L) signal types. These signal types are fundamentally different from one another, and the rules governing maximum cable lengths also differ, so the two types must be treated separately. Refer to the following two sections as necessary to determine the cable length limitations of any system.

Signal Type: Frequency
The maximum allowable cable length for flow sensors with frequency output is dependent upon the output signal strength of the sensors themselves, and the degree to which the signals are susceptible to EMI or "noise." This is largely a function of whether the sensors are self-powered, or powered by an external source.

All of the sensors in the table below are compatible with the 8900. The two models limited to 60 m (200 ft) are self-powered sensors. The 8900 automatically provides power to the others via the I/O Module (normal sensor wiring).

These maximum recommended cable lengths apply to individual sensors and are completely independent of one another. Additionally, these cable lengths have no relevance to any digital (S^3L) devices that may also be connected to the I/O Module.

Flow Sensor Models with Frequency Output

Maximum Cable Length	515	525	2000	2100	2507	2536	2537	2540	2551	2552	2580
7.6m (25 ft)											X
60 m (200 ft)	X	X									Special Order
305 m (1000 ft)			X	X	X	X	X	X	X	X	Special Order

Wiring Information: Instruments

V. Rear Terminal Views Signet Instruments

9900 Transmitter

Stand Alone Application, no current loop used

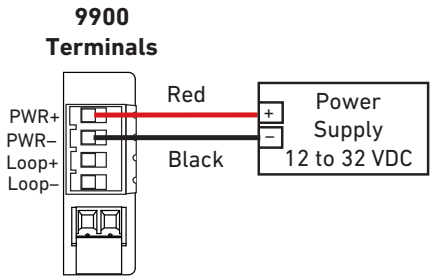

Connection to a PLC/Recorder, separate supply

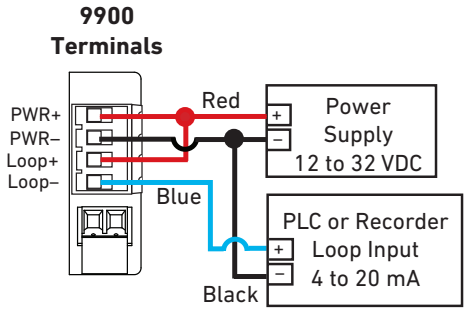

Loop Powered

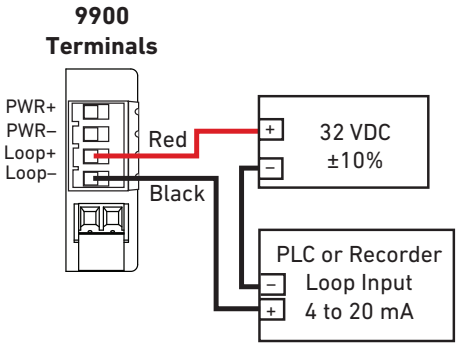

Note: Loop Power can be used to power Signet models 515, 525, 2250, 2350, 2450, 2536, and 2540 sensors.

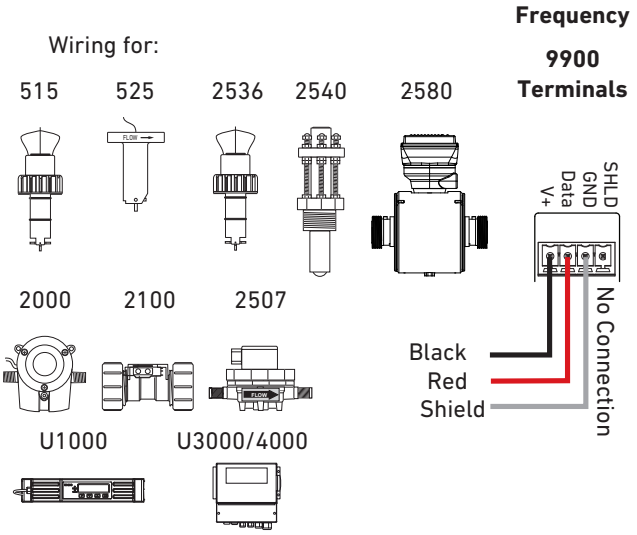

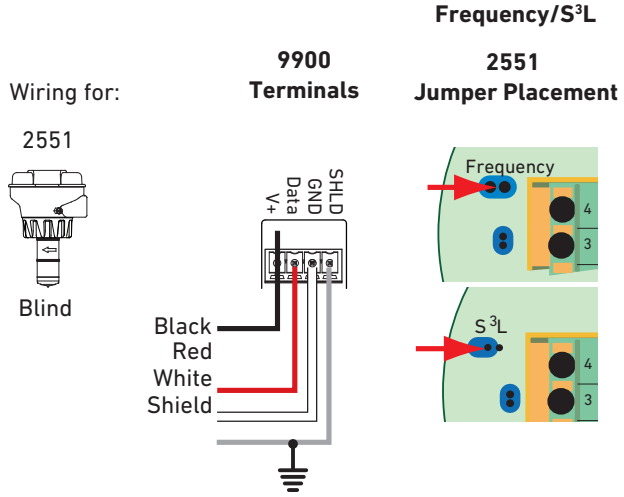

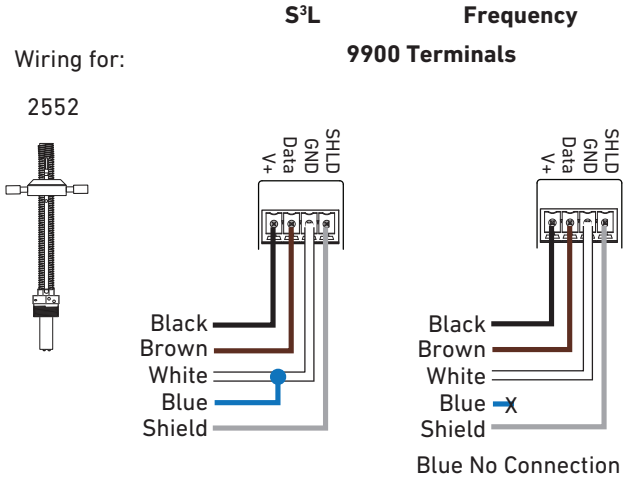

Wiring Information: Instruments

V. Rear Terminal Views Signet Instruments

9900 Transmitter

Wiring for:

2537

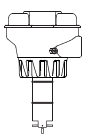

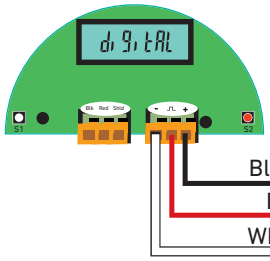

Wiring for:

2250 2350 2450 2551

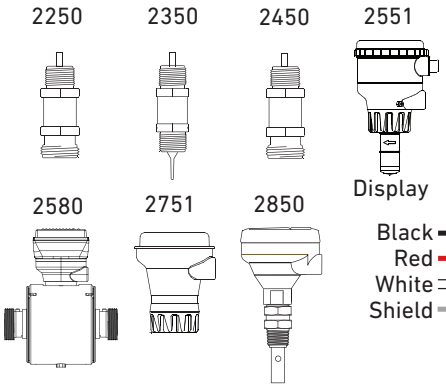

Wiring for:

8058-1

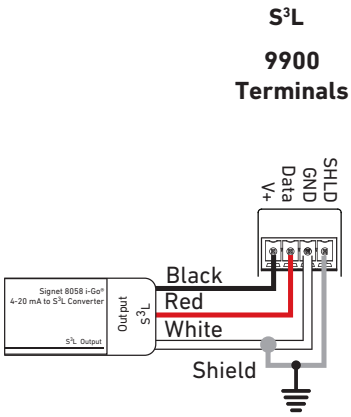

8058-2

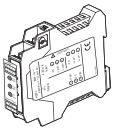

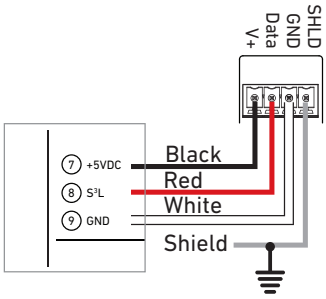

NPN Style Wiring

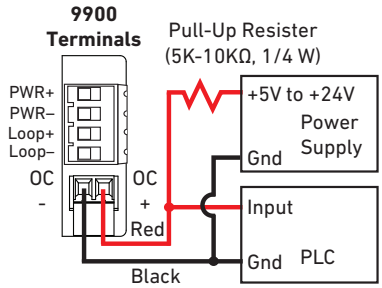

If PLC needs 0 logic input when relay is not energized, set NORMAL to CLOSED in the RELAY menu when using the Open Collector (R1) with NPN style wiring

PNP Style Wiring

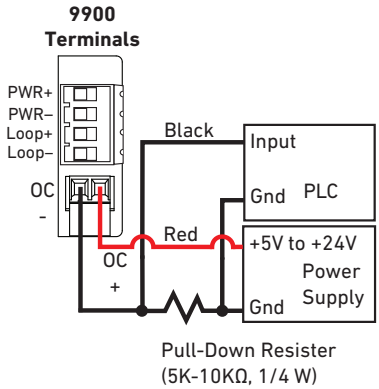

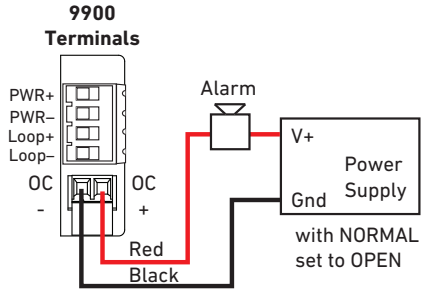

Relay Module Wiring

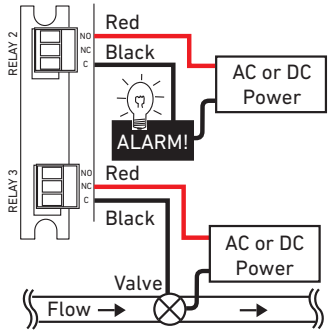

The alarm is OFF during normal operation, and will go ON when relay energizes according to 9900 Relay settings.

The valve is ON during normal operation, and will go OFF when relay energizes according to 9900 Relay settings

NO = Normally Open (closes when energized)
NC = Normally Closed (opens when energized)

Wiring Information: Instruments

V. Rear Terminal Views Signet Instruments

9900-1BC Batch Controller

Stand Alone Application, no current loop used

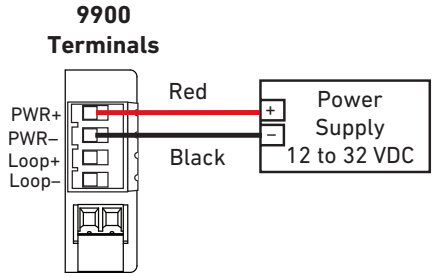

Connection to a PLC/Recorder, separate supply

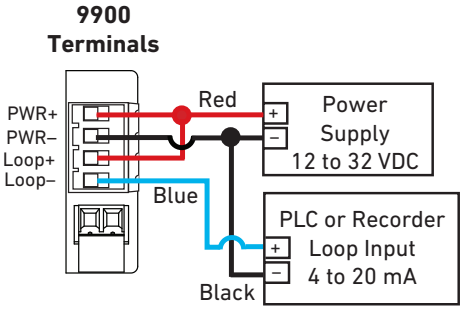

9900.397 Batch Module Wiring

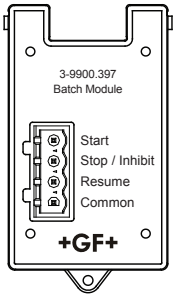

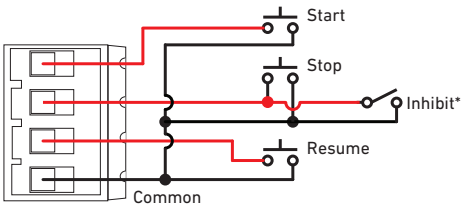

*Wire an external input as override for preventing batch from starting.

Wiring for:

Frequency

9900 Terminals

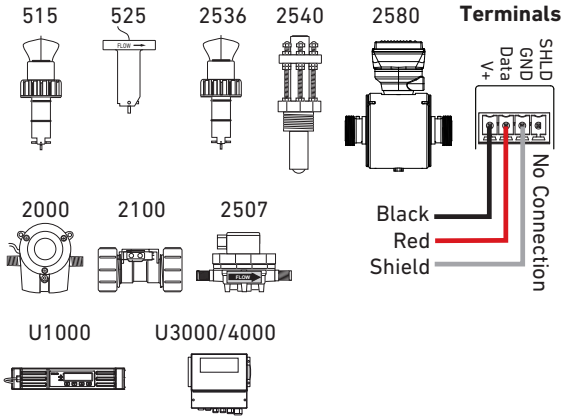

Wiring for:

Frequency/S³L

9900 Terminals

2551 Jumper Placement

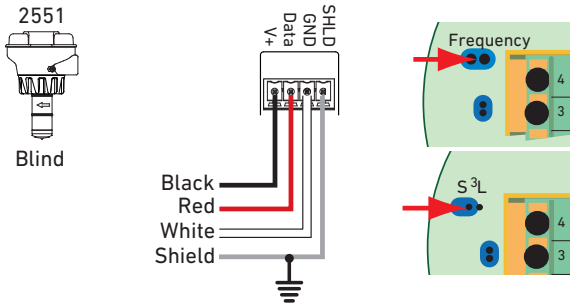

Wiring for:

S³L

Frequency

9900 Terminals

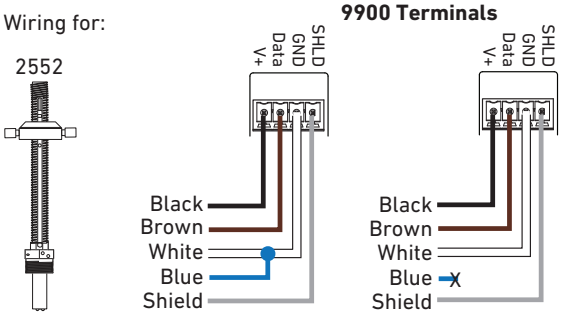

Blue No Connection

Wiring for:

S³L

9900 Terminals

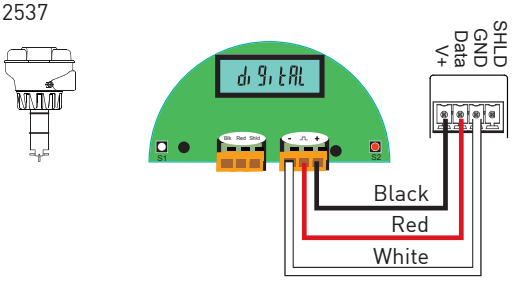

Wiring Information: Instruments

V. Rear Terminal Views Signet Instruments

9900-1BC Batch Controller

NPN Style Wiring

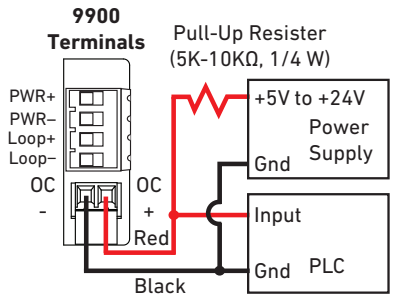

If PLC needs 0 logic input when relay is not energized, set NORMAL to CLOSED in the RELAY menu when using the Open Collector (R1) with NPN style wiring

PNP Style Wiring

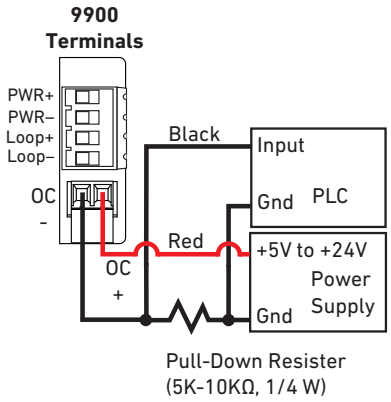

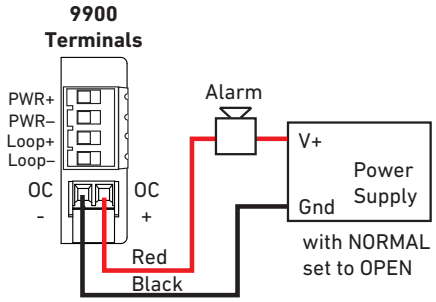

Relay Module Wiring

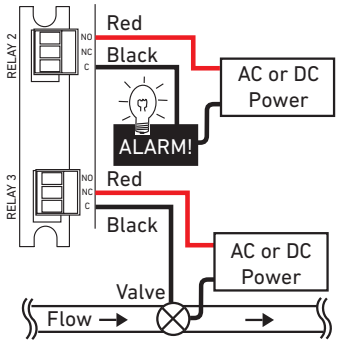

The alarm is OFF during normal operation, and will go ON when relay energizes according to 9900 Relay settings.

The valve is ON during normal operation, and will go OFF when relay energizes according to 9900 Relay settings

NO = Normally Open (closes when energized)
NC = Normally Closed (opens when energized)

Wiring Information: Instruments

V. Rear Terminal Views Signet Instruments

9950 Transmitter

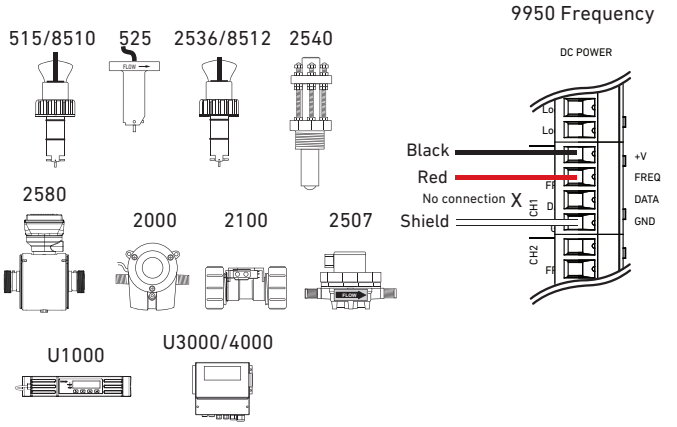

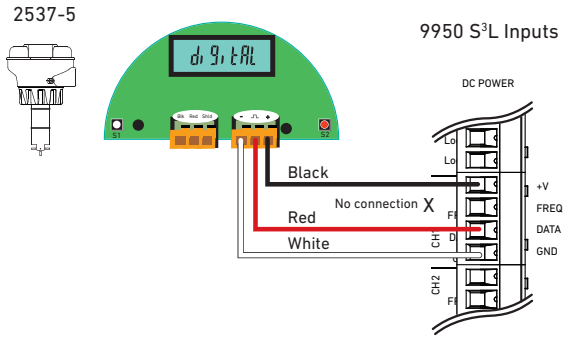

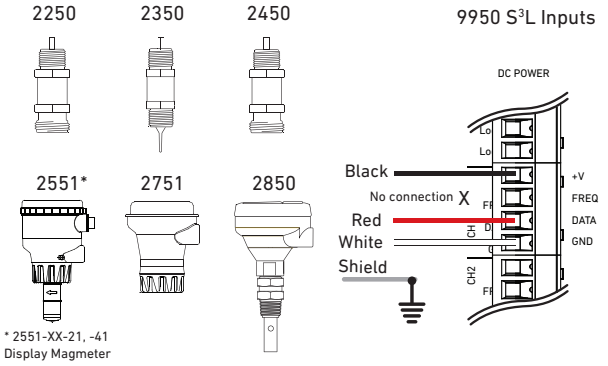

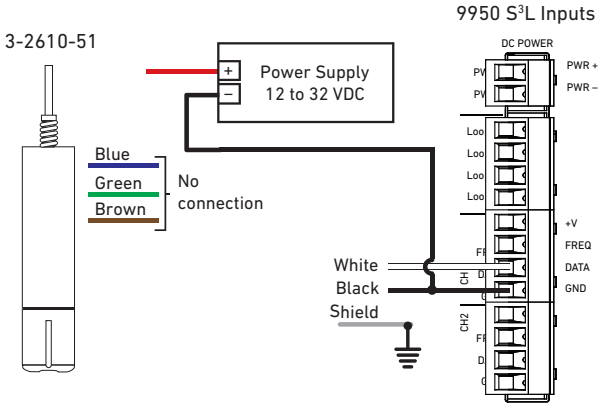

Important:
An external DC supply is needed for the 2610-51 Dissolved Oxygen sensor when the 9950 is AC powered. The 3-9950-2 with AC power will not supply power to the 2610-51 Sensor. A power supply of 12 to 24 VDC regulated is required.

Wiring Information: Instruments

V. Rear Terminal Views Signet Instruments

9950 Transmitter

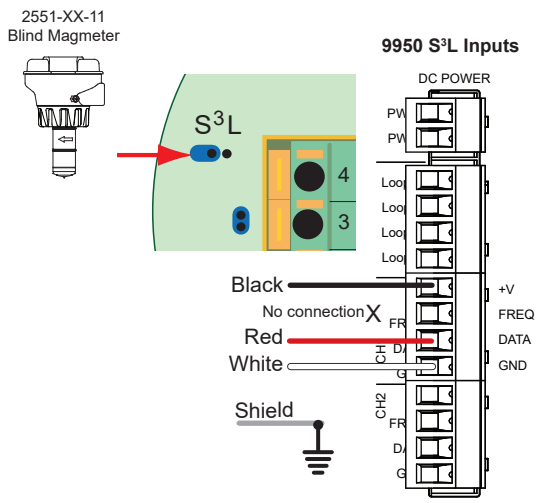

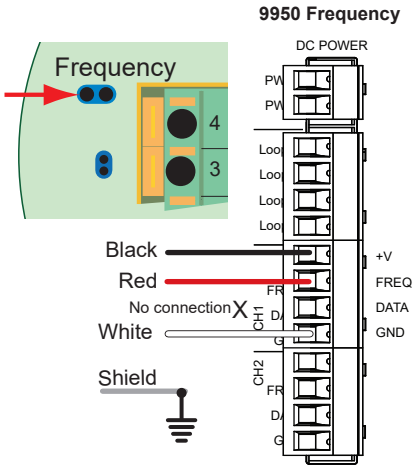

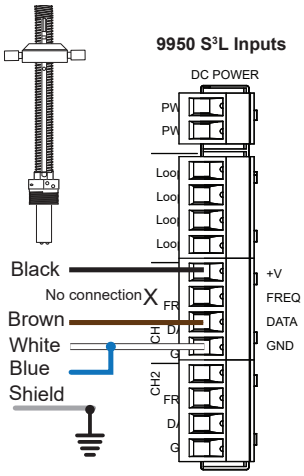

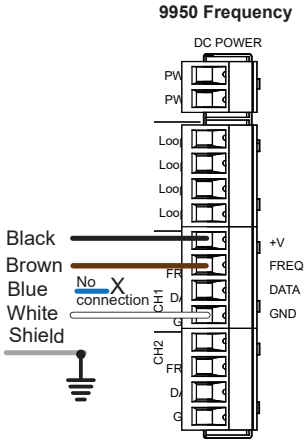

Wiring Information: Instruments

V. Rear Terminal Views Signet Instruments

9950 Transmitter

Power Wiring

3-9950-1 and 3-9950-2

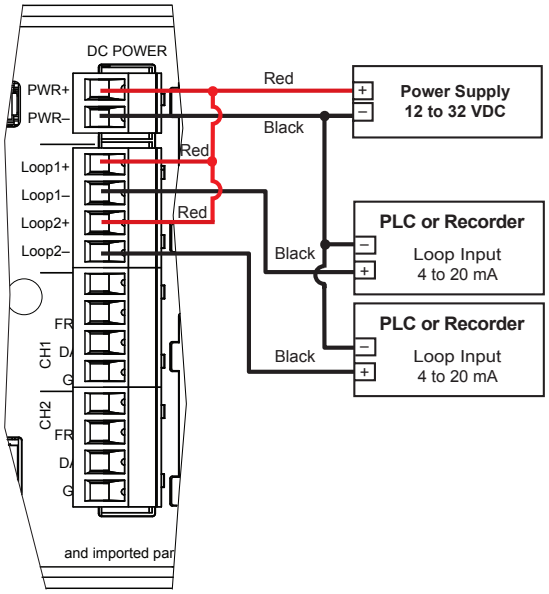

3-9950-2

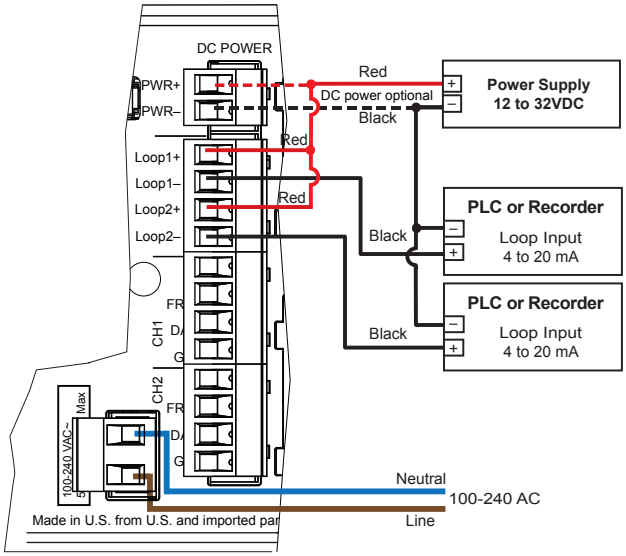

Important:
An external DC power supply is required for the 4 to 20 mA Loop Outputs.
The 9950 does not supply power on the DC Power Terminals.

Wiring Information: Instruments

V. Rear Terminal Views Signet Instruments

9950 Transmitter

Relay Module Wiring

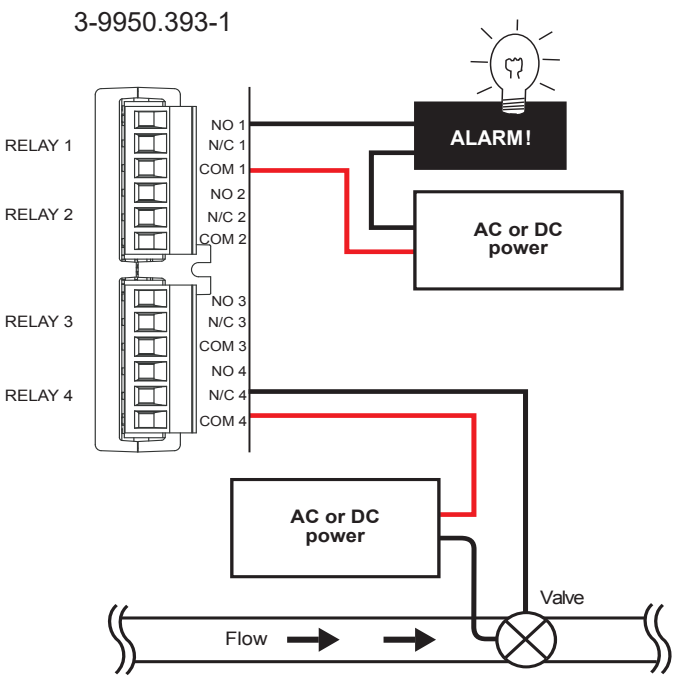

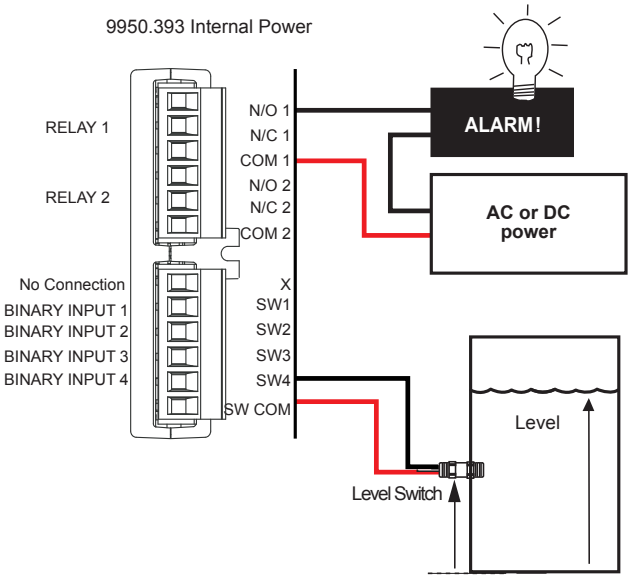

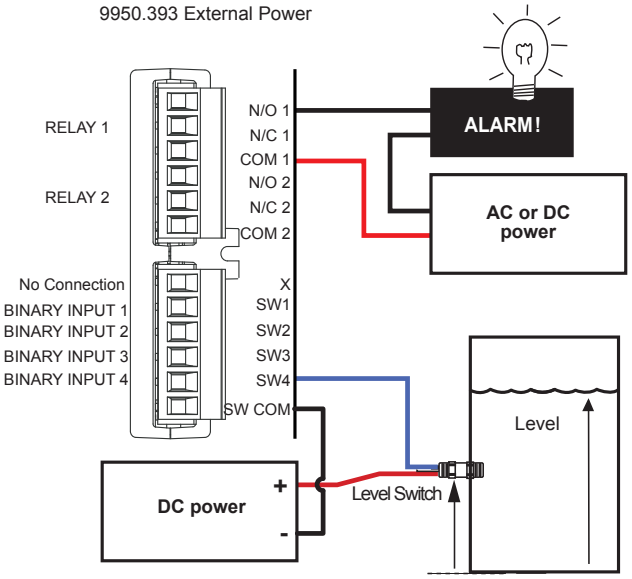

V. Rear Terminal Views Signet Instruments

Multi-Parameter (continued) Signal Type: Digital (S^3L)

Step 1: Calculate the Total Current Requirements for S^3L Branches

This information will determine the total current consumption of all digital (S^3L) sensors on a branch of the digital (S^3L) bus, as a means of determining if the sensor load is within the current rating of the cable.
Fill in the chart to determine the current requirements for a specific set of sensors.

Maximum Current Consumption for S^3L Devices

	Current	Quantity	Total	Example:	
2350 Temperature Sensor	1 mA	X ___ =	_____	none	
2450 Pressure Sensor	1 mA	X ___ =	_____	2 Press	1 mA x 2 = 2 mA
2551/2552 Magmeter	15 mA	X ___ =	_____	2 Mags	15 mA x 2 = 30 mA
2580 FlowtraMag Meter	N/A	X ___ =	_____	2580 externally powered 24 W min	
2751 pH/ORP Sensor Electronics	3 mA	X ___ =	_____	2 pH	3 mA x 2 = 6 mA
2850 Cond. Sensor Electronics	2 mA	X ___ =	_____	none	
8058 Current-digital (S^3L) Converter	3 mA	X ___ =	_____	none	
8059 External Relay Module**	1 mA	X ___ =	_____	none	
Total current requirement on digital (S^3L) bus			_____ mA	Total	38 mA

** The digital (S^3L) communication link between the 8900 and the 8059 is powered by the 8900 and consumes 1 mA maximum. However, the 8059 External Relay Module always requires a separate power source for its operation.

Step 2 Determine the Maximum Length of Each Branch of the (S^3L) Bus

This chart determines the maximum length of one branch of the digital (S^3L) bus. This distance is important because it ensures that the digital signal can successfully travel the length of the cable and still be detected by the 8900.

- Find the column nearest to the total current in this branch, as determined in step 1.
- Find the cable gauge or wire dimensions that most accurately represent the cable being used.
- The number at the intersection of these factors represents the maximum cable for one branch of the (S^3L) bus.
- The top section references AWG cables, the lower section is based on METRIC cables.
- Dividing the sensors between two branches will greatly increase the maximum cable length of each branch.
  Example: 40 mA total on one branch can sustain 70 ft of cable. 20 mA on two branches can sustain 140 ft on each branch.

Maximum Cable (AWG) Power Supply Current (mA)

AWG	Ω/ft	1	2	4	10	15	20	40	60	90
24	0.0277	1800	900	450	180	120	90	40	30	20
22	0.0175	2850	1420	710	280	190	140	70	40	30
20	0.0109	3000	2290	1140	450	300	220	110	70	50
18	0.0069	3000	3000	1810	720	480	360	180	120	80
16	0.0044	3000	3000	2840	1130	750	560	280	180	120

Feet

Maximum Cable (Metric)

Area mm²	Diameter mm	Ω/m	1	2	4	10	15	20	40	60	90
0.2	0.50463	0.0885	560	280	140	50	30	20	10	0	0
0.25	0.56419	0.0708	700	350	170	70	40	30	10	10	0
0.5	0.79789	0.0354	900	700	350	140	90	70	30	20	10
0.75	0.97721	0.0236	900	900	520	210	140	100	50	30	20
1	1.12839	0.0177	900	900	700	280	180	140	70	40	30
1.5	1.38199	0.0118	900	900	900	420	280	210	100	70	40

Meters

Step 3 Determine the Maximum Total Cable Length of the Digital (S^3L) Bus

The quality of the cable used in the bus determines the maximum length of all branches combined. The maximum cable length may not exceed these limits, regardless of current requirements.

Cable Capacitance (pF/ft)	Max. Total Distance	Comments
<50 pF/ft	900 ft	Even the most economical cables meet this specification.
<30 pF/ft	1500 ft	Cables from Signet fall into this category.
<15 pF/ft	3000 ft	Cables meeting this specification are very expensive network cables.
pF/m	**Max. Total Distance**	
<150 pF/m	300 m	Even the most economical cables meet this specification.
<100 pF/m	450 m	Cables from Signet fall into this category.
<50 pF/m	900 m	Cables meeting this specification are very expensive network cables.

Wiring Information: 4630 Chlorine Analyzer System

I. 4630 Chlorine Analyzer System

1. Mount the panel on a vertical flat surface using appropriate hardware.

> **!** DO NOT turn on power at this time.

2. Open the wiring enclosure and wire input power. The panel system is pre-wired with an auto switching power supply that is rated for 100 to 240 VAC 50/60 Hz input. Wire with NEC Class I, 300 volt, 105 C wire. A switch or circuit breaker rated at 15 amps AC shall be included in the building installation. Install the circuit breaker in close proximity to the equipment and within easy reach of the operator. Mark the circuit breaker as the disconnecting device for the equipment.

3. **100 to 240 VAC Input Wiring:** Insert input power wiring into the cable gland on the left side of the electrical box.
4. **12 to 24 VDC Input Wiring Conversion:** Disconnect the red and black output wires from the power supply (Figure 1) and connect your DC power source to them (Figure 2).
5. Install the input power wires into the proper terminals on the power supply (Figure 3). Use only 12-26 AWG copper wiring.
6. Recommended torque for the terminals is 7 lb-in. (See 4630 Manual for more detailed instructions)
7. Wire any 4 to 20 mA and relay output.

Figure 1

Figure 2

Figure 3
100 to 240 VAC input
Standard AC configuration

Part # 7300-0024 shown. Actual power supply may differ.

Electrical Box Wiring Schematic

Wiring Label Legend

Ground	Earth Ground. Attach 4 to 20 mA loop cable shield wire here to help eliminate possible noise.
Loop 1	4 to 20 mA loop #1
Loop 2	4 to 20 mA loop #2
Relay 1	Relay output #1
NC	Relay normally closed when un-energized (contact)
C	Common
NO	Relay normally open when un-energized (no contact)
Relay 2	Relay output #2 (terminals same as Relay #1)

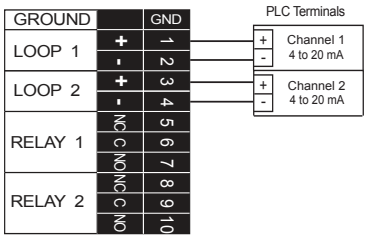

PLC dual channel connection

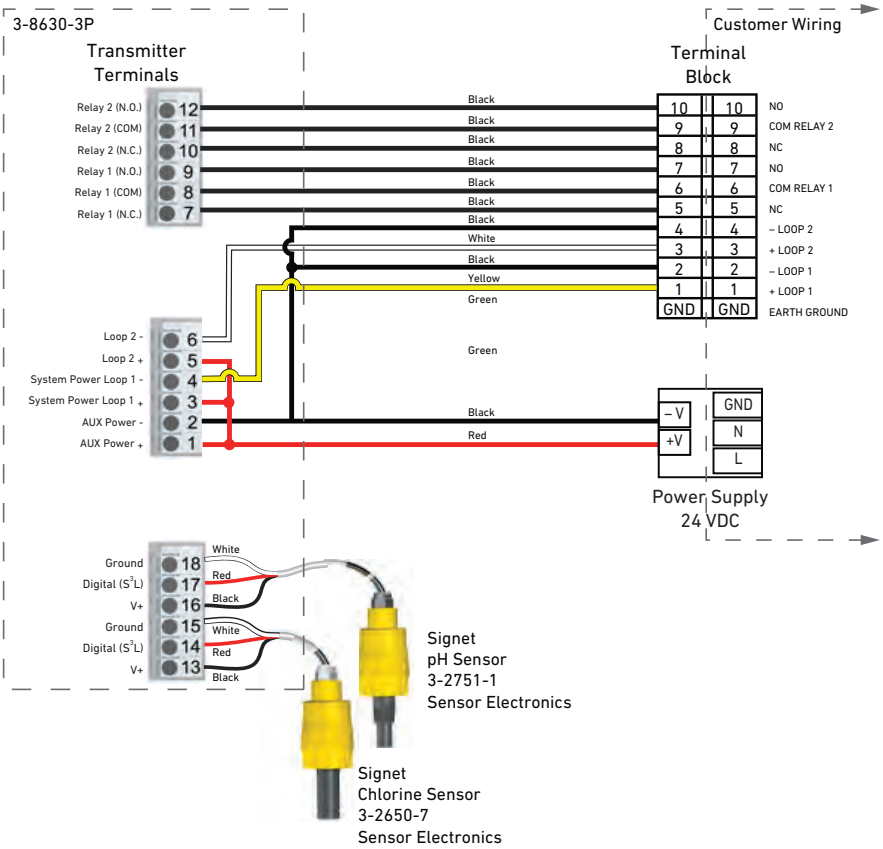

Technical Reference Section: Standards and Approvals

CE Mark

CE Marking on a product is a legal requirement for selling in the EU stating the conformity with specific European Union (EU) directives. It is a self-declaration that a product complies with the essential requirements of the relevant European health, safety and environmental protection legislation. For our products the relevant directives are "Low Voltage" and "Electromagnetic Conformity ("EMC").

Low Voltage Directive
This directive refers to products that require voltage ranges from 50 to 1000 volts for AC (alternating current) and 75 to 1500 volts for DC (direct current).

EMC Directive
This directive defines the minimum requirements for immunity and maximum emissions with related tests for electronic equipment. These tests are only relevant for "active" circuitry, which refers to products that contain semiconductors that can be affected by electromagnetic interference (EMI) or generate themselves EMI. Products that do not contain such active circuits (like 515, 525 or pH sensors) are exempt from the requirements from this directive, thus do not require the CE marking.

UL Listing

E171559

Underwriters Laboratory (UL) is recognized as a Nationally Recognized Testing Laboratory (NRTL). UL is required for products intended to be connected to voltage levels that may cause "Hazardous Live" conditions. For all practical purposes this means the connection of 120V or 240V AC to either an AC power supply or the contacts of relays. Furthermore we list products equipped with certain types of batteries that may cause specific safety concerns (e.g. explosion) other than the voltage rating. Manufacturers submit products to UL for testing and safety certification on a voluntary basis and therefore UL is not required by law. Products with the UL mark can assure customers that they are buying products that have been tested to a standard that will help prevent danger or accidents in case of hazardous conditions. All products that have mechanical relays such the ProcessPro, ProPoint, Multi-Parameter, Display Magmeter with relays, and 2537, all qualify for the UL listing because of the relay ratings which are typically 240 VAC max and 5A max. Products that contain a battery, such as the 8150, also require UL to safety test the current discharge amount that can cause a fire/explosion. Canada also has the UL Listing, however, the products in Canada will be listed under CUL.

ETL

Intertek (ETL) is also recognized as a Nationally Recognized Testing Laboratory (NRTL). ETL provides product safety testing and certification, and is equally recognized and accepted as UL. ETL evaluates products using UL, CSA, and other harmonized standards. It is also voluntary.

China RoHS

(Restriction of Hazardous Substances), officially known as **Administrative Measure on the Control of Pollution Caused by Electronic Information Products**, is a Chinese government regulation to control six EU RoHS substances and other hazardous substances which have not been defined. All items shipped to China now have to be marked whether the items contained in the box are compliant or non-compliant. The Electronic Information Products (EIP) logo is used to mark parts and assemblies where these identified materials are within acceptable limits, and are environmentally safe. Units that do contain hazardous substances are marked with the EIP logo including an Environment Friendly Use Period (EFUP) value in years.

RoHS and WEEE

The Restriction of Hazardous Substances Directive 2002/95/EC (RoHS Directive) and the Waste Electrical and Electronic Equipment Directive 2002/96/EC (WEEE Directive) were adopted in February 2003 by the European Union. RoHS Directive bans the placing on the EU market of new electrical and electronic equipment containing more than agreed levels of lead, cadmium, mercury, hexavalent chromium, polybrominated biphenyl (PBB) and polybrominated diphenyl ether (PBDE) flame retardants. It is closely linked with the WEEE Directive which sets collection, recycling and recovery targets for electrical goods and is part of a legislative initiative to solve the problem of huge amounts of toxic e-waste. For disassembly instructions, please refer to our website.
On June 8, 2011, RoHS Recast Directive 2011/65/EU (revision to the RoHS Directive 2002/95/EC) was adopted and published in the Official Journal of the European Union on July 1, 2011. It repeals the original RoHS Directive, 2002/95/EC. The 2011/65/EU directive specifies its scope of coverage in Annex 1, Categories 1-11. In addition, Article 4, Paragraph 3, states that the directive shall apply to industrial monitoring and control instruments which are placed on the market from 22 July 2017.
The Recast codifies documentation, marking, and manufacturer, importer and distributor responsibilities under the Directive, including product CE marking and manufacturer Declaration of Conformity.
It is important to understand that GF Signet products will remain compliant although RoHS logo and declaration statements will change. All relevant literature and products (product labels, data sheets, manuals, catalogs, etc.) will be updated by July 22, 2017.
Starting January 2013 we will begin removing the EU Lead Free RoHS logo [ ] from all relevant published literature and products. A conformity declaration will be available on our website and in the local language of the European Union (EU) market as they become available.

ISO 9001 / 14001 and OHSAS 18001

- ISO 9001 provides the requirements for quality management systems, is now firmly established as the globally implemented standard for providing assurance about the ability to satisfy quality requirements and to enhance customer satisfaction in supplier-customer relationships.
- ISO 14001 provides the requirements for environmental management systems, confirms its global relevance for organizations wishing to operate in an environmentally sustainable manner.
- OHSAS 18001 provided the occupational health and safety activities and associated supporting processes associated with the design, production and service of flow and analytical sensors, transmitters, controllers, indicators, instruments and accessories of their products and services.

The people of Georg Fischer Signet LLC are dedicated to the design, manufacture and support of products that meet or exceed the requirements of our customers. We pledge to do this by developing safe processes and procedures which continuously improve our systems, products and the environment.

Technical Reference Section: Standards and Approvals

We target appropriate goals in our business environment, being mindful of legal requirements, customer requests and the prevention of pollution. We are committed to enhancing our employees safety and health.

This policy was developed by the executive management of the company. We train all employees in the requirements of this policy, and we document, audit, review, and revise our business systems regularly to ensure that it remains appropriate and effective to achieve our goals.

FCC

Federal Communications Commission (FCC) is an independent U.S. Federal Government agency responsible for the management of the radio spectrum in the US. The FCC regulates interstate and international communications by radio, television, wire, satellite and cable in all 50 states, the District of Columbia and U.S. territories.

Electrical and electronic products may interfere by producing radio spectrum noise. As electric current moves around inside an electrical product, the current will produce electromagnetic field waves that will travel through space. Those waves may affect other electrical currents in other products, and cause unwanted interference.

We ensure our products have been tested and are compliant with the radio pollution limits and equipment authorization procedures.

NSF/ANSI 61 and NSF/ANSI 372

NSF International is an accredited, independent third-party certification body that tests and certifies products to verify they meet these public health and safety standards. Products that meet these standards bear the NSF mark.

Georg Fischer Signet LLC has received certification under NSF/ANSI 61: Drinking Water System Components - Health Effects, for its Polypropylene Flow sensors, PVC-U Tee Fittings, and PVC-U Clamp-on Saddles in February of 2015.

Products are also certified to NSF/ANSI 372: Drinking Water System Components - Lead Content and conform to the lead content requirements for "lead free" plumbing as defined by California, Vermont, Maryland, and Louisiana state laws and the U.S. Safe Drinking Water Act.

The water contact temperature listed in the certification is CLD 23, which is 23 degrees Celsius, or 73 degrees Fahrenheit, or ambient temperature.
Signet products bearing the NSF mark means the product complies with NSF/ANSI 61 and NSF/ANSI 372 requirements. NSF conducts periodic unannounced inspections and product testing to verify that the product continues to comply with the applicable standards.

The mark also provides:
Knowledge that an impartial review against established criteria or guidelines has been conducted. Evidence that product labeling and claims have been objectively reviewed by a trusted third party. Backing by a team of professionals dedicated to public health and safety operating in more than 150 countries

Lloyd's Register Type Approval

Lloyd's Register Group Limited (LR) is a technical and business services organization and a maritime classification society.

A Type Approval from Lloyd's Register demonstrates that the product conforms to recognized industry quality standards, International Conventions and/or the LR Rules, through a process of independent design review, sample testing and verification of production controls.

ATEX

The ATEX Directives, 99/92/EC and 94/9/EC, applies to equipment intended to be used where an explosive atmosphere is present, when they are first placed on the European Union Market.
Products that comply with the ATEX Directive bear the CE and the ATEX marks. The ATEX Directive defines procedures that manufacturers have to apply before placing a product on the market. The procedures are intended to demonstrate the due diligence of the manufacturers of the equipment and, in some cases, involves Notified Bodies.

PROFIBUS and PROFINET International (PI):

PROFIBUS and PROFINET International (PI) is an independent organization responsible for the PROFIBUS and PROFINET protocols. PROFIBUS is standardized by the International Electrotechnical Commission (IEC) as IEC 61158. PI, through its regional associations, competence centers, training centers and test labs ensure high quality products and devices that implement the PROFIBUS standards. GF Signet products that implement the PROFIBUS protocol are tested and certified by PROFIBUS and PROFINET International and the PI Test Labs.

HART®

HART is a bi-directional communication protocol that provides data access between intelligent field instruments and host systems. A host can be any software application from a technician's hand-held device or laptop to a plant's process control, asset management, safety or other system using any control platform.

All Signet devices that use the HART Protocol as a basis for communications are tested according to the standards contained in HART Protocol Specification 7.2 (HCF_TEST-1 through HCF_TEST-4) to ensure full compliance with all Protocol requirements prior to being listed in the Foundation's Supplier Product Catalog.

HART is a registered trademark of the HART Communication Foundation.

Bluetooth

The Bluetooth SIG is a global community of over 34,000 companies serving to unify, harmonize and drive innovation in the vast range of connected devices all around us.

Through collective creation and shared technical standards, Bluetooth simplifies, secures and enriches the technology experience of users worldwide.

The Bluetooth® word mark and logos are registered trademarks owned by Bluetooth SIG,Inc. and any use of such marks by Georg Fischer is under license. Other trademarks and trade names are those of their respective owners.

Technical Reference Section: Communication Protocols

PROFIBUS

General Theory of Operation

PROFIBUS (Process Field Bus) was developed in the late 1980s by a consortium of companies, institutes, and the German government. In 1993 a simpler and faster version of the protocol was developed PROFIBUS DP (Decentralized Peripherals). Profibus was standardized in 1991/1993 by the German Institute for Standardization as DIN 19245. In 1996 it was included in European Standard EN 50170 and in 1999 Profibus became a part of the International Electrotechnical Commission standards IEC 61158/IEC 61784.

PROFIBUS DP is a high speed serial communications protocol designed to connect distributed devices to a centralized controller. The PROFIBUS protocol allows many devices to share a single cable. PROFIBUS transmits process values, diagnostic, and configuration parameters over the network.

Automation systems that do not use a digital bus protocol require all devices to be wired back to the central controller. This increases installation, start up, and maintenance costs due to the increased wiring complexity. The controller interacts with external devices using on/off or analog signals, reducing the amount of information that can be exchanged between the controller and the device to single pieces of information, is the device on or off or the value of a single parameter as represented by an analog signal.

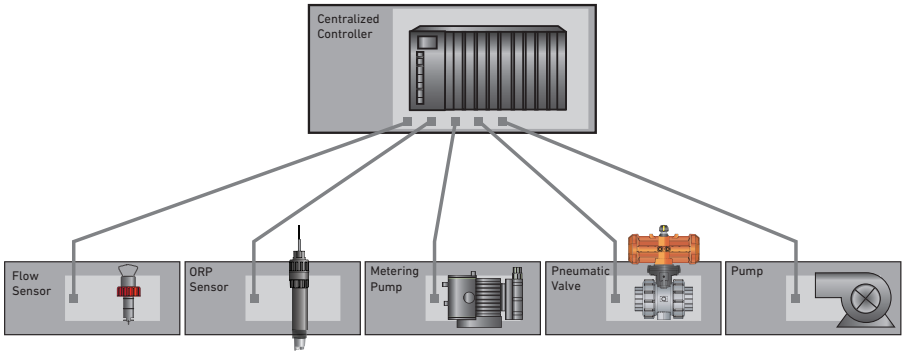

Automation systems that use a digital bus protocol, such as PROFIBUS, interconnect devices over a common cable. PROFIBUS allows two way communications between the controller and external devices. Configuration information, diagnostic data, along with process values are transmitted over the PROFIBUS cable reducing wiring, easing system configuration and start up, and offering diagnostic information to quickly troubleshoot and respond to errors in the field.

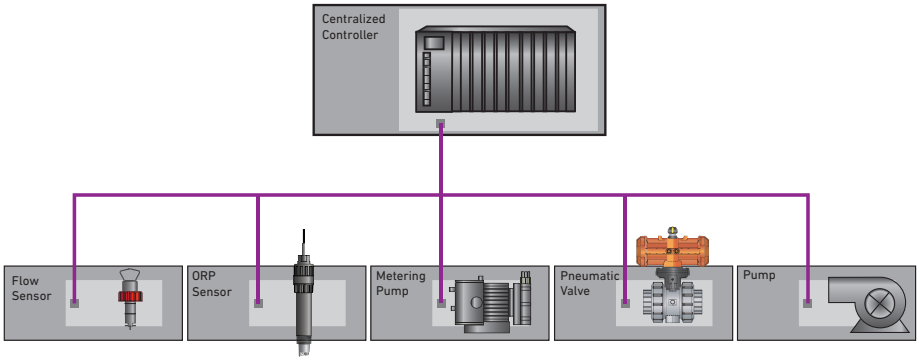

Visit our YouTube Channel to view the latest videos

Technical Reference Section: Communication Protocols

The PROFIBUS protocol is a master/slave protocol where one, or more, master(s) initiate communications and slave devices respond to the requests from the master(s).

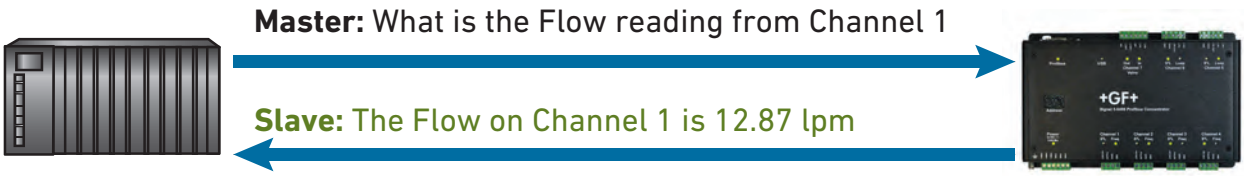

Profibus devices are supplied with a General Station Description (GSD) file. The GSD file is a text file created by the device manufactured and supplied either with the device or downloaded from the manufacture's or PI's website. The GSD file describes the capabilities, information that can be exchanged, configuration parameters, and diagnostic information that is available from the device so that the master(s) can communicate with the remote device. The GSD file is loaded into a configuration or programming tool which the Automation System Programmer uses to program the master.

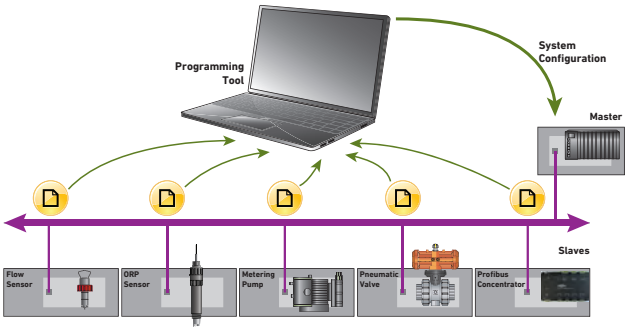

Each device on the Profibus cable is assigned a unique address. Profibus allows up to 127 devices, masters and slaves, on a single network. The master device is programmed with the addresses of the each device in the system and, in combination with the information from the GSD file, is able to communicate with the remote devices.

When the automation system is started, a slave is powered up, or a new slave attached to the Profibus network the master will send configuration information down to the slave device. The slave device will compare the configuration sent by the master to its actual configuration and inform the master of any differences between the actual configuration and what the master was expecting.

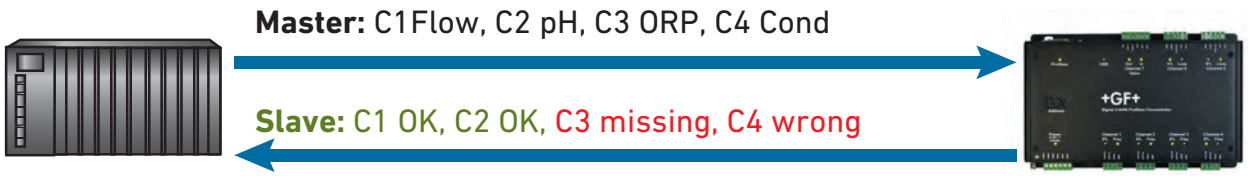

Technical Reference Section: Communication Protocols

If there are discrepancies between the configurations in the master and how the slave is physically configured the slave will report the error back to the master. The master uses this information to determine the appropriate action to take, such as alerting an operator or preventing incorrect operations of the misconfigured slave.

After the automation system is configured data is transferred between the slaves and the master(s) on a fixed time frame. The update rate from each slave is fixed and is determined by the bus speed, the number of devices on the Profibus network and the amount of data each device is transferring.

Profibus DP supports bus speeds from 9,600 bits per second (bps) to 12,000,000 bps. Profibus DP installations with cable type A, twisted, shielded two-wire cable, interconnects have a transmission range between repeaters as shown in the chart.

Transmission Rate (1000 bits per second)	Transmission Range Between Repeaters in Meters (Feet)
9.6 to 93.75	1200 (3,935)
187.5	1000 (3,280)
500	400 (1,310)
1,500	200 (655)
3,000 to 12,000	100 (325)

The Signet 3-0486 Profibus Concentrator is certified to the PROFIBUS DP V1 standard. The Profibus Concentrator contains six (S^3L) channels and a single current loop (4 to 20 mA) input and output channel. The six (S^3L) channels are dual use; four channels will support frequency, Open Collector or Sinusoidal output, flow sensors, two channels will support current loop inputs. The Profibus Concentrator is compatible with all Signet (S^3L) devices, flow, pH/ORP, conductivity, pressure, temperature, level, dissolved oxygen, current loop (8058), and relay module (8059).

The Signet GSD file allows the user to configure sensors similar to the programming of 8900 or 9900 transmitters. The user can select engineering units for the measurements, adjust averaging and sensitivity settings, and set fail safe values for outputs to be used if master communications is lost.

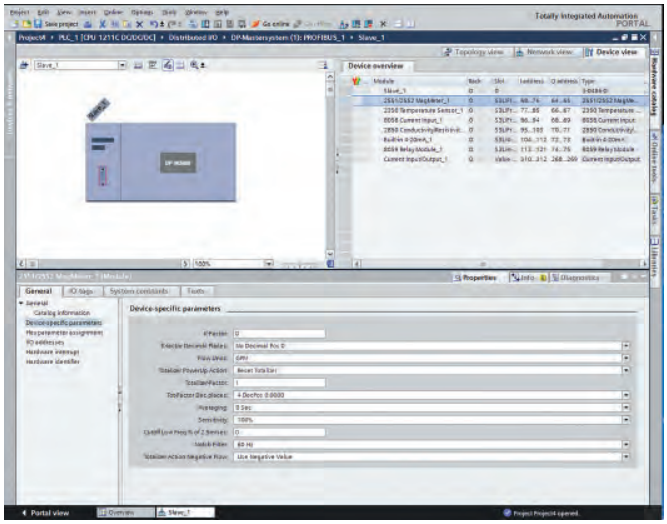

Technical Reference Section: Communication Protocols

The Profibus Concentrator simplifies programming by offering a consistent interface to the automation programmer. Each channel supports two measurement parameters, Primary and Secondary measurements, a status byte and a control word. The primary parameter returns the sensor's main reading such as flow rate or pH. The secondary reading returns other information such as temperature, totalizer values or raw mAs. On certain sensors the programmer can select what parameter to return as the secondary measurement.

All (S^3L) devices return a status byte. The status byte will indicate if the device is working correctly or if there is an error, such as missing sensor, wrong sensor connected to the channel, or a measurement error. The information from the status byte allows the automation programmer to detect errors and take appropriate actions to prevent upsets in the process.

(S^3L) devices that allow the programmer to configure options, reset totalizers, or activate outputs, such as current loop or relays, are written using the control word. The automation programmer can set individual bits to enable options, reset totalizers, or activate relays. The value of the current loop output is set by writing the desired current value to the control word.

Additional information on the programming and use of the Profibus Concentrator can be found in the Installation and GSD Manual.

Technical Reference Section: Flow

Velocity-based Flow Measurement Technologies

All of the flow sensors featured in the Signet catalog belong to the broad category of velocity-based flow measurement devices. This vast offering includes paddlewheel, electromagnetic, in-line rotor, and turbine flow sensors. Principles of operation vary considerably for each type, but some very important installation considerations are common throughout. The following discussion, plus the general selection guidelines at the front of the catalog, should help the user choose the appropriate sensor type to obtain optimal flow measurement results.

All manuals, data sheets, and additional information are available at **www.gfpiping.com**

Fully Developed Turbulent Flow
Velocity-based flow sensors depend on fully developed turbulent flow for accurate and repeatable measurements. Fully developed turbulent flow occurs in Newtonian fluids with a Reynolds Number (Re) greater than 4,500. Low flow rates, viscous liquids, and large pipe sizes make fully developed turbulent flow more difficult to achieve. The opposite is also true. That is, for a given set of conditions, simply reducing the pipe size to increase the local flow velocity will produce a higher Reynolds Number.

Re: Reynolds Number

Re = 3,162.76 x Q x Sg/(μ x ID)
where:

Q = Flow Rate in GPM
Sg = Specific Gravity
μ = Dynamic Viscosity in Centipoise (cP)
ID = Pipe Inside Diameter in Inches

OR

Re = DN x V/ν
where:

DN = Pipe Inside Diameter (m)
V = Flow Velocity (m/s)
ν = Kinematic Viscosity (m^2/s)
(ν of water = 1×10^{-6} m^2/s)

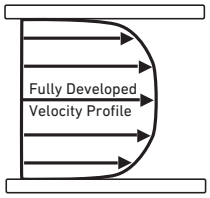

Principles of Operation

Electromagnetic flow sensors, like Signet Models 2551 and 2552, operate on Faraday's principle of electromagnetic induction, and have no moving parts. As fluid (must be conductive >20 μS) moves through the magnetic field produced at the sensor tip, a voltage occurs that is directly proportional to the fluid velocity. Internal electronics then convert this voltage into a frequency and/or a 4 to 20 mA output. Signet electromagnetic flow sensors are insertion-style, suitable for use in a wide range of pipe sizes.

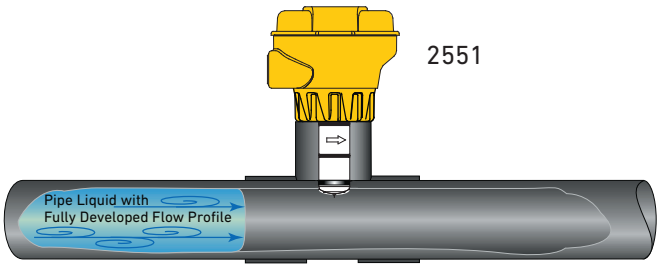

Visit our YouTube Channel to view the latest videos

Technical Reference Section: Flow

Principles of Operation (continued)

Paddlewheel flow sensors are insertion devices, mounted perpendicular to the piping system, and rely upon the energy in the flow stream to spin a rotor (paddlewheel) around a stationary shaft. Most paddlewheel flow sensors utilize rotors with magnets embedded in each blade. The magnets are typically used either in conjunction with a coil internal to the sensor housing to produce a sinusoidal output (self-generating, non-powered sensors), or to trigger an internal electronic switch to produce a square-wave output (transistor-type, powered sensors). Either way, the resulting frequency is directly proportional to the fluid velocity.

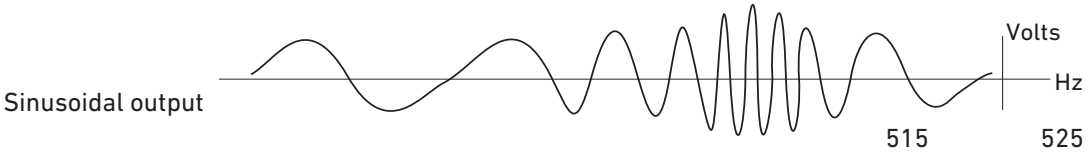

Sinusoidal output

1) Sinusoidal sensors output a signal typical of self-generating, non-powered paddlewheel sensors such as the Model 515 or 525. The frequency and amplitude (voltage) both vary directly with flow rate.

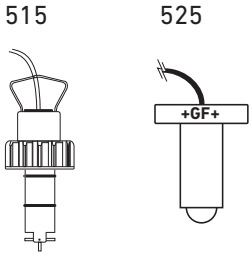

Square wave output

2) Transistor-type sensors output a signal typical of powered sensors such as the Model 2536, 2540, and all other Signet powered flow sensors with frequency output.

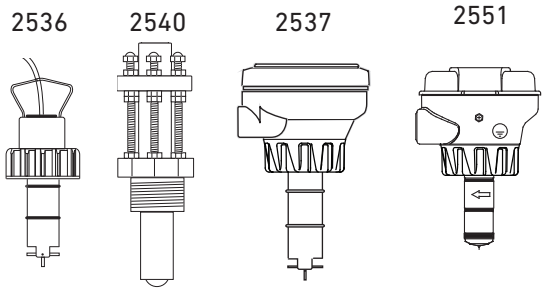

In-Line Rotor flow sensors like the Signet Models 2000 and 2507 are similar to paddlewheel sensors, except the rotor is positioned in a flow cell. These types of sensors have a transistor-type output signal and are able to measure lower flow rates.

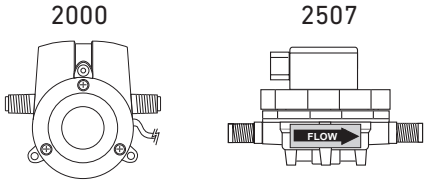

Turbine flow sensors are full-bore devices designed for low-flow measurements. Signet Model 2100 is offered in 6.4 mm and 12.7 mm (¼ in. and ½ in.) line sizes. Many self-aligning end-connector options are available for installation simplicity and application versatility. Similar to paddlewheels, they rely upon the energy in the flow stream to spin a rotor (turbine).

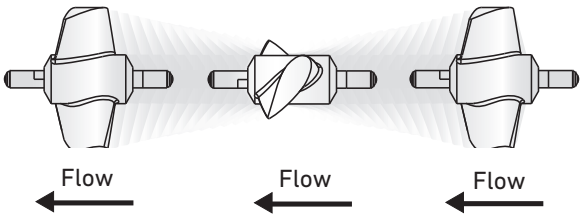

The difference is that the shaft is in the center of, and parallel to, the flow stream. The velocity of the fluid spins the turbine for detection by external electronic circuitry, producing a transistor-type square wave output with a frequency directly proportional to the flow rate.

2100

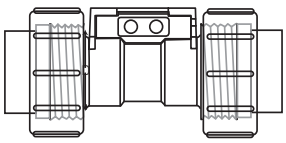

Technical Reference Section: Flow

Flow Range Charts (GPM)

Paddlewheel and Electromagnetic Sensors

Signet Models 515, 525, 2536, 2537, 2540, 2551, 2552, 2580
GPM Flow Rates for DN15 to DN450 (½ in. to 18 in.) pipe sizes

STD ANSI PIPE SIZE		2580		2551/2552		2536/8512/2537/2540		515/8510		525	
Inch	Metric DN(mm)	MIN	MAX	MIN	MAX	MIN	MAX	MIN	MAX	MIN	MAX
		0.07 ft/s	33 Ft/s	0.15 Ft/s	33 Ft/s	0.3 Ft/s	20 Ft/s	1 Ft/s	20 Ft/s	1.6 Ft/s	20 Ft/s
0.5	15			0.14	31.25	0.28	18.94	0.95	18.94	1.52	18.94
0.75	20			0.25	54.85	0.50	33.24	1.66	33.24	2.66	33.24
1	25	0.14	70.36	0.40	88.89	0.81	53.88	2.69	53.88	4.31	53.88
1.25	32			0.70	153.84	1.40	93.24	4.66	93.24	7.46	93.24
1.5	40	0.389	183	0.95	209.40	1.90	126.91	6.35	126.91	10.15	126.91
2	50	0.59	293.92	1.57	345.15	3.14	209.18	10.46	209.18	16.73	209.18
2.5	65			2.24	492.45	4.48	298.46	14.92	298.46	23.88	298.46
3	80	1.4	660	3.46	760.39	6.91	460.84	23.04	460.84	36.87	460.84
4	100	2.30	1151.22	5.95	1309.40	11.90	793.57	39.68	793.57	63.49	793.57
5	125			9.35	2057.74	18.71	1247.12	62.36	1247.12	99.77	1247.12
6	150	5.6	2640	13.51	2971.57	27.01	1800.95	90.05	1800.95	144.08	1800.95
8	200	9.7	4583	23.39	5145.63	46.78	3118.56	155.93	3118.56	249.49	3118.56
10	250	16	7333	36.86	8110.72	73.73	4915.59	245.78	4915.59	393.25	4915.59
12	300	27	12833	52.87	11632.86	105.75	7050.22	352.51	7050.22	564.02	7050.22
14	350			64.46	14182.60	128.93	8595.51	429.78	8595.51		
16	400			85.38	18787.27	170.79	11386.22	569.31	11386.22		
18	450			109.25	24038.21	218.53	14568.61	728.43	14568.61		
20	500			136.05	29935.43	272.14	18142.68	907.13	18142.68		
22	550			165.79	36478.91	331.63	22108.43	1105.42	22108.43		
24	600			198.47	43668.67	396.99	26465.86	1323.29	26465.86		
26	650			234.08	51504.69	468.22	31214.96	1560.75	31214.96		
28	700			272.63	59986.98	545.34	36355.75	1817.79	36355.75		
30	750			314.12	69115.55	628.32	41888.21	2094.41	41888.21		
32	800			358.54	78890.38	717.19	47812.35	2390.62	47812.35		
34	850			405.90	89311.48	811.92	54128.17	2706.41	54128.17		
36	900			456.20	100378.86	912.54	60835.67	3041.78	60835.67		
42	1050			624.72	137458.60	1249.62	83308.24	4165.41	83308.24		
48	1200			819.68	180354.77	1639.59	109305.92	5465.30	109305.92		

All numbers with the exception of 2580 are nominal values based on SCH 40 pipe.
2580 is based on SCH80 PVC pipe.

Technical Reference Section: Flow

Flow Range Charts (LPM)

Paddlewheel and Electromagnetic Sensors

Signet Models 515, 525, 2536, 2537, 2540, 2551, 2552, 2580
LPM Flow Rates for DN15 to DN450 (½ in. to 18 in.) pipe sizes

STD ANSI PIPE SIZE		2580		2551/2552		2536/8512/2537/2540		515/8510		525	
Inch	Metric DN (mm)	MIN 0.02 m/s	MAX 10 m/s	MIN 0.05 m/s	MAX 10 m/s	MIN 0.1 m/s	MAX 6 m/s	MIN 0.3 m/s	MAX 6 m/s	MIN 0.5 m/s	MAX 6 m/s
0.5	15			0.59	117.62	1.18	70.57	3.53	70.57	5.88	70.57
0.75	20			1.03	206.43	2.06	123.86	6.19	123.86	10.32	123.86
1	25	0.53	266.35	1.67	334.55	3.35	200.73	10.04	200.73	16.73	200.73
1.25	32			2.89	578.98	5.79	347.39	17.37	347.39	28.95	347.39
1.5	40	1.41	666.13	3.94	788.06	7.88	472.84	23.64	472.84	39.40	472.84
2	50	2.23	1112.60	6.49	1298.94	12.99	779.36	38.97	779.36	64.95	779.36
2.5	65			9.27	1853.32	18.53	1111.99	55.60	1111.99	92.67	1111.99
3	80	5.32	2508.09	14.31	2861.67	28.62	1717.00	85.85	1717.00	143.08	1717.00
4	100	8.72	4357.83	24.64	4927.83	49.28	2956.70	147.83	2956.70	246.39	2956.70
5	125			38.72	7744.17	77.44	4646.50	232.33	4646.50	387.21	4646.50
6	150	21	9984	55.92	11183.30	111.83	6709.98	335.50	6709.98	559.16	6709.98
8	200	37	17333	96.83	19365.24	193.65	11619.14	580.96	11619.14	968.26	11619.14
10	250	61	27733	152.62	30524.15	305.24	18314.49	915.72	18314.49	1526.21	18314.49
12	300	102	45534	218.90	43779.49	437.79	26267.69	1313.38	26267.69	2188.97	26267.69
14	350			266.88	53375.25	533.75	32025.15	1601.26	32025.15		
16	400			353.52	70704.64	707.05	42422.78	2121.14	42422.78		
18	450			452.33	90466.21	904.66	54279.73	2713.99	54279.73		
20	500			563.30	112659.98	1126.60	67595.99	3379.80	67595.99		
22	550			686.43	137285.94	1372.86	82371.56	4118.58	82371.56		
24	600			821.72	164344.10	1643.44	98606.46	4930.32	98606.46		
26	650			969.17	193834.45	1938.34	116300.67	5815.03	116300.67		
28	700			1128.78	225756.99	2257.57	135454.20	6772.71	135454.20		
30	750			1300.56	260111.73	2601.12	156067.04	7803.35	156067.04		
32	800			1484.49	296898.66	2968.99	178139.20	8906.96	178139.20		
34	850			1680.59	336117.79	3361.18	201670.67	10083.53	201670.67		
36	900			1888.85	377769.11	3777.69	226661.46	11333.07	226661.46		
42	1050			2586.58	517316.23	5173.16	310389.74	15519.49	310389.74		
48	1200			3393.77	678753.10	6787.53	407251.86	20362.59	407251.86		

All numbers with the exception of 2580 are nominal values based on SCH 40 pipe.
2580 is based on SCH80 PVC pipe.

Technical Reference Section: pH/ORP

Information in this section addresses frequently asked questions regarding pH and ORP and is provided as REFERENCE ONLY to supplement procedures and recommendations specifically outlined in individual product instruction manuals.

All manuals, data sheets, and additional helpful information are available at **www.gfpiping.com**

Definition of pH

pH is defined as the negative logarithm of the Hydrogen ion concentration in aqueous solutions. The common pH scale ranges from 0 to 14, with 7 being neutral water (H_2O). At pH 7, Hydrogen ions (H^+) exist in equal concentration to Hydroxyl ions (OH^-). A solution is considered to be acidic if the concentration of H^+ exceeds that of OH^-, and is indicated by pH values below 7. Conversely, a solution is considered to be basic if the concentration of H^+ is less than that of OH^-, and is indicated by pH values above 7.

Common Acids
1M HCl: 0.0 pH
Sulfuric Acid: 0.3 pH
Lemon Juice: 2.0 pH
Vinegar: 3.0 pH
Wine: 3.5 pH
Beer: 4.5 pH
Milk: 6.0 pH

Common Bases
Egg Whites: 7.5 pH
Seawater: 8.0 pH
Sodium Bicarbonate: 8.4 pH
Ammonia: 11.6 pH
Photo Developer: 12.0 pH
0.1M NaOH: 13.0 pH
Lye: 14.0 pH

pH Scale

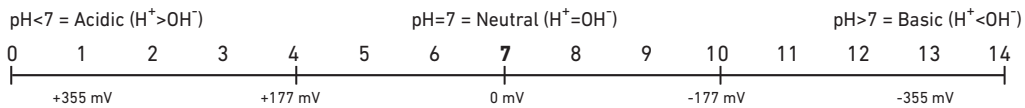

(Theoretical: 59.16 mV/pH @ 25 °C)

Definition of ORP

ORP is an abbreviation for Oxidation-Reduction Potential. Oxidation is a term used to denote the occurrence of a molecule losing an electron. Reduction occurs as a molecule gains an electron. The "potential" is simply an indication of a solution's propensity to contribute or accept electrons. ORP reactions (sometimes referred to as REDOX) always take place simultaneously. There is never oxidation without reduction, and ORP electrodes are used to detect electrons exchanged by molecules as these reactions occur.

Both pH and ORP electrodes produce voltages that depend on the solutions in contact with their sensing ends. Most pH electrodes, including the Signet brand, are designed to produce 0 mV at pH 7, positive mV below pH 7 (associated with the charge of the Hydrogen ion, H^+) and negative mV above pH 7 (associated with the charge of the Hydroxyl ion, OH^-). According to the Nernst Equation, the interval between each pH unit is approximately 59.16 mV at 25 °C. This "raw" output is converted to a pH value by the display instrument.

The ORP scale is typically -1000 mV to +1000 mV, and the electrodes produce these values directly.

Whereas pH is a specific measure of the Hydrogen ion concentration in solution, ORP only provides relative measures of chemicals and cannot discriminate one from another. Although non-specific, it is a very useful and inexpensive method of monitoring and controlling the activity of such compounds as chlorine, ozone, bromine, cyanide, chromate, and many other chemical reactions.

It is worth noting that Temperature Compensation, very important for accurate pH measurement, is NOT used in ORP measurements. Temperature does indeed affect the reactionary potential of all chemicals, some to a greater extent than others. But even if the effects of temperature could be precisely known in all of the many different REDOX reactions, it would not be desirable to remove them from the measurement. True ORP is the direct measurement of electrons in transit during Oxidation-Reduction reactions, regardless of temperature.

Visit our YouTube Channel to view the latest videos

Technical Reference Section: pH/ORP

Principle of Operation

Standard pH/ORP electrodes are also commonly called combination electrodes: a pH/ORP measuring electrode and a reference measuring electrode are combined in a single body. The pH/ORP sensor measures the amount of hydrogen ions in the liquid. The pH signal is measured against the steady reference signal. Various chemical elements leaching through the porous reference junction can react with the reference electrolyte, dilute the electrolyte solution, or attack the silver chloride element; in either case, it will disturb the steady reference signal. Stray electrical currents will also affect the steady reference signal. A temperature element is also built into the pH combination electrode. Instruments interpret the temperature compensated pH signal into a pH reading at 25 °C (77 °F). ORP values are not temperature dependent; Signet ORP sensors do not have temperature compensation.

Cutaway of 2724 pH electrode

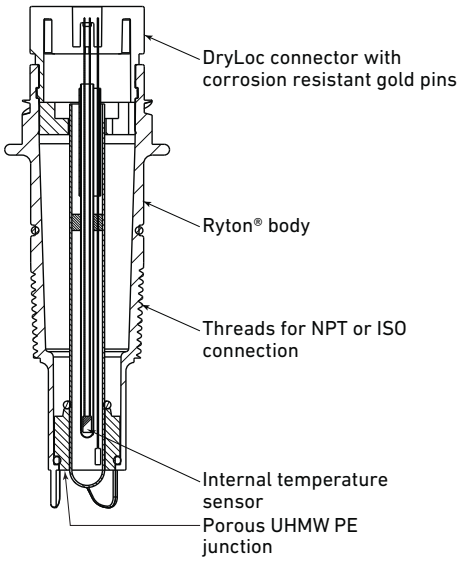

Signet offers two different groups of Standard pH/ORP Electrode Models: Models 2724-2726 and 2774-2777

Differential pH/ORP electrodes function similar to the standard (combination) electrodes, but the reference design is modified and there is a third electrode, the solution ground. The pH and reference electrodes are measured against the solution ground. The solution ground drains stray currents away from the reference element, hence maintaining a steady signal at all times. The reference salt bridge slows or stops various chemical elements from leaching into the reference chamber. Chemicals that leach in may dilute the electrolyte but will not react with the glass-encased reference silver chloride element. The reference electrolyte can be refreshed if it is diluted or depleted. The temperature element is embedded in the pH/ORP electrode for an extremely quick response.

Cutaway of 2766 pH electrode

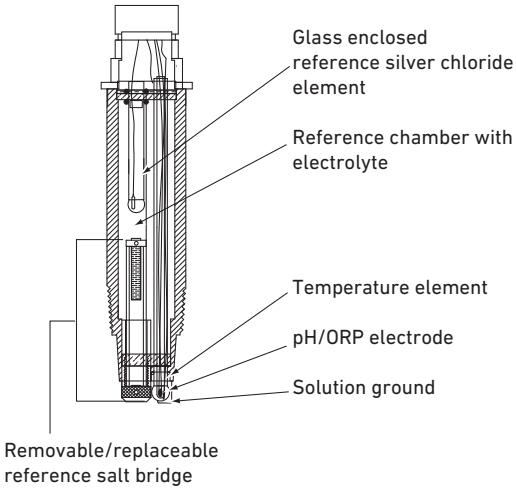

Signet offers one group of Differential pH/ORP Electrodes: Models 2764-2767

Technical Reference Section: pH/ORP

Standard Versus Differential pH/ORP Electrodes

Signet offers what is called combination pH/ORP electrodes; a combination of three or four electrodes built into one common body that measures the pH or ORP of the solutions. These electrodes are the pH/ORP sensing element, temperature sensing element (pH only), the reference, and sometimes a solution ground. An electrical path between the process solution, reference electrode, and the pH/ORP sensing electrode must always be present to complete the measuring circuit. When the circuit is broken or interrupted, the result is a faulty reading. There are only a few things in a chemical process that would affect the glass-sensing element. These include concentrations of HF, constant high temperatures, and particles that can break the glass. On the other hand, there are many problems that can occur with the reference electrode.

The reference silver chloride sensing element (wire) is exposed to the process liquid via the primary porous reference junction, which is in constant contact with the process and allows liquid to pass through to the reference electrolyte. Because of the direct contact with the process liquid, the reference electrolyte and reference silver chloride sensing element can react with chemicals in the process. Many application liquids do not chemically react with the reference and therefore a standard electrode will perform well in this scenario. However, there are other process chemicals that will easily attack the reference and therefore, a differential style electrode should be used. There are three advantages of the differential electrode:

1. If the process chemicals attack the KCl electrolyte, the reference electrolyte chamber is refillable.
2. If the reference junction becomes clogged by chemical reactions between the KCl and the process chemicals, the reference salt bridge is replaceable.
3. If there are stray currents or if there are process chemicals that attack the silver chloride wire in the standard electrodes, it will not attack it in the differential electrode because the wire is encased in a glass electrode.

A general rule of thumb is to use a differential electrode if you have mercury, copper, lead, chlorate, bromine, iodine, cyanide, or sulfide compounds in the process liquid. Differential electrodes may also be useful in processes where oil, grease, and dirt build up on the reference junction because it is easily replaced.

See Model 2764-2767 Differential pH/ORP catalog pages for more information on standard versus differential electrodes.

Technical Reference Section: pH/ORP

Important Application Tips

- It is important that the sensing end of pH and ORP electrodes remain wet, for it may be permanently damaged if allowed to dehydrate. This is true for both in-line and submersible installation configurations. However, be careful to keep the electrical interconnection between electrode and preamplifier dry and clean at all times. Moisture in this area can also cause permanent damage.
- pH control is best when performed in a tank. This is especially true in neutralization applications since it is very important for reagents to mix thoroughly with waste fluids, and to be allowed adequate time for the reactions to occur. Limiting adjustments to fewer than 3 pH units per stage, and sizing tanks to provide at least 10 minutes retention time, will increase the probability of producing safe effluents.
- For bulb-style pH and ORP electrodes, significant natural self-cleaning by turbulent eddies is achieved at velocities of 1.5 m/s or more (5 ft/s). Flat surface electrodes get adequate self-cleaning at velocities of 0.3 to 0.6 m/s (1 to 2 ft/s). In all cases, exposure to velocities greater than 3 m/s (10 ft/s) can cause excessive measurement noise and electrode wear and should be avoided.
- The aging of pH and ORP electrodes (i.e., reference depletion and decreased glass sensitivity) results from a series of chemical reactions. And as a general rule, the rates of chemical reactions double with every increase of 10 °C or 18 °F. This means shorter life expectancy for all pH and ORP electrodes as application temperatures increase.
- HF acid and strong caustics etch pH glass. High concentrations, especially at high temperatures, destroy electrodes quickly. For applications containing trace quantities of HF (<2%), use the Signet 2726-HF electrode. This electrode has a polymeric constituent in the pH glass that resists attack by HF and extends the service life considerably over "normal" electrodes.
- In applications where process temperatures will drop below 10 °C (50 °F), use the bulb-style electrodes in place of the flat style electrode. This is a function of the electrical impedance of the glass that increases dramatically as temperature decreases.
- Proper electrode placement within a tank is also very important. Electrodes should be mounted in well-mixed areas, away from reagent and waste introduction. It is usually advisable to position the electrode near the discharge outlet of the tank.
- In-line pH control is not recommended because it is very difficult to determine the amounts of reagent necessary to achieve a desired reaction if both pH and flow are variables. However, in-line pH monitoring is very common and useful.

Technical Reference Section: pH/ORP

Maintenance Tips

- Cleaning pH and ORP electrodes and calibrating the systems should be done regularly. The required frequency is application-dependent, but once/week for cleaning, and twice/month for calibration is recommended.

- Isopropyl alcohol may be used for removing mild grease and oils from the pH sensitive glass or from the metallic tips of ORP electrodes. Use 5% HCl on porous reference junctions clogged with hard water deposits, or other solvents/detergents as necessary. Always consider the electrode's materials of construction when selecting a cleanser.

- The purpose of calibration is to compensate the system for the continual changes occurring within the electrodes. Like batteries, all pH and ORP electrodes eventually deplete and must be replaced. A good time to determine the condition of an electrode is after cleaning and during calibration. Note the mV readings in pH buffers and replace the electrode if its actual mV output differs more than 50 mV from these theoretical values: pH 7 = 0 mV, pH 4 = +177 mV, pH 10 = -177 mV. Replace an ORP electrode if its actual mV output differs more than 50 mV from the theoretical values in the table below:

ORP Values of Standard pH Buffers Saturated with Quinhydrone

	pH4			pH7		
Temperature (°C)	20	**25**	30	20	**25**	30
ORP Value (mV)	268	**264**	258	92	**87**	79

- The typical shelf-life recommendation for Signet pH and ORP electrodes is 12 months at 25 °C (77 °F).

- Refrigeration will extend this period, but do not allow them to freeze! Expansion of internal solutions during freezing can cause permanent damage to the electrodes.

- The risk of putting older electrodes into service is the possible disappointment of shorter than expected service-life. All Signet pH and ORP electrodes are marked with date codes to identify the date of manufacture.

Notes:

Technical Reference Section: Conductivity/Resistivity

Information in this section addresses frequently asked questions regarding Conductivity (Resistivity) and is provided as REFERENCE ONLY to supplement procedures and recommendations specifically outlined in individual product instruction manuals.

All manuals, data sheets, and additional helpful information are available at **www.gfpiping.com**

Definition of Conductivity and Resistivity

Conductivity is a measure of the ability of a material to convey an electric current. The proper term for this ability of a solution is electrolytic conductivity, since only ions conduct electric current in solution. When dissolved in solution, many substances such as salts, acids and bases dissociate into ions. Electrolytic conductivity (or simply conductivity) is therefore an indirect measure of the ionic concentration of a solution. Generally, conductivity increases and decreases with the concentration of ions.

Unlike pH, which is a specific measure of Hydrogen ion concentration, conductivity is a non-selective measurement of all the dissolved ionic species in a solution. As such, it is a highly utilized parameter in water, wastewater and industrial process analyses. For example, conductivity is used to monitor the salt load of waters entering treatment facilities, to monitor and control the quality of drinking water and ultra-pure water, and to otherwise detect contaminants in industrial processes.

According to the International Standards Organization (ISO) the unit of conductance is the Siemens (S), after Werner von Siemens (1816-1892). However, the following three separate units of measure are commonly used to express conductivity: Siemens/cm (S/cm), mhos/cm, and µS/cm.

For any given measurement Siemens/cm and mhos/cm are exactly equal; they are merely different labels for the same value. The denominator in these units (cm) is sometimes truncated but is always assumed to be present.

Ohm•cm is a unit of resistivity (the inverse of conductivity) and is frequently replaced by "Ω" the symbol for electrical resistance. Units of resistivity are most commonly associated with ultra-pure water measurements in the millions of ohm•cm, or MΩ (megohms).

Some users will also find it desirable to express conductivity in terms of parts per million (PPM) or parts per billion (PPB) of total dissolved solids (TDS). Signet instruments accommodate this by allowing the entry of a TDS factor to convert from standard units of conductivity. (See the instruction manual of any current Signet conductivity instrument for details.)

Conductivity is a measurement parameter with a very wide range. For example, ultra-pure water has a theoretical maximum resistivity of approximately 18.2 MΩ, approximately 0.055 µS (microsiemens), whereas concentrated acids and bases can exceed 400,000 µS. Despite the wide-ranging possibilities most applications for conductivity measurement are much narrower. Tap water, for instance, typically measures between 50 and 1,000 µS.

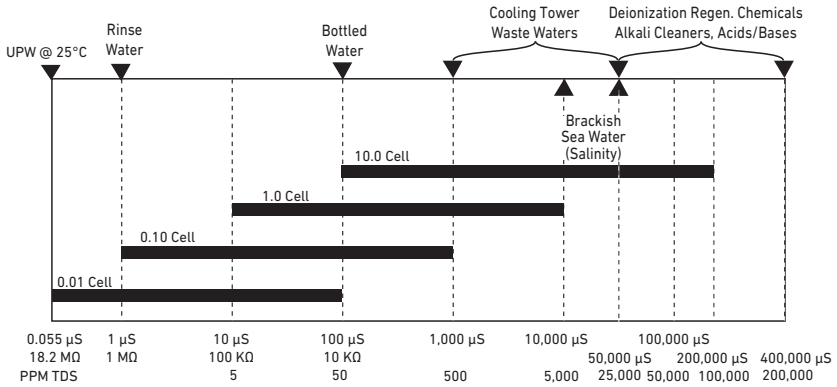

Technical Reference Section: Conductivity/Resistivity

Principle of Operation

Most conductivity electrodes consist of two measuring half-cells. The geometry of the half-cells can be tailored to provide highly accurate measurements over a specific conductivity range. Cell constants help to describe electrode geometry for the purpose of selecting the appropriate electrode for a given application. A cell constant is defined as the length between the two half-cells divided by the area of the cells.

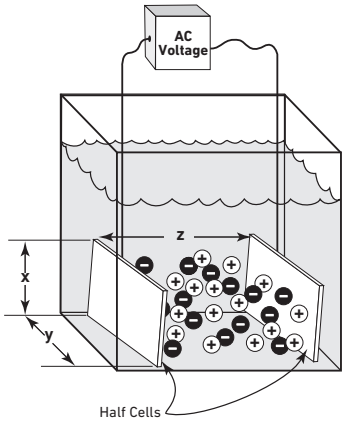

Conductivity Cell Constant = $\frac{\text{Length}}{\text{CSA*}} = \frac{z}{xy}$

As an example, When x = y = z = 1cm the cell constant becomes $\frac{1\text{cm}}{1\text{cm}^2} = 1\text{cm}^{-1}$

Solutions of very low conductivity (high resistivity) such as ultra-pure water are best measured with half-cells that are very close together (i.e., cell constant = 0.01 cm^{-1}). Highly conductive solutions should be measured with half-cells that are farther apart and have relatively little cross sectional area between them (i.e., cell constant = 20.0 cm^{-1}).

*** CSA is cross sectional area.**

Temperature Compensation

The conductivity of a solution is highly dependent upon temperature. Therefore, conductivity measurements are almost always converted to an equivalent conductivity at the common reference temperature of 25 °C (77 °F). This is accomplished by means of temperature compensation algorithms in the instruments, which require temperature as well as conductivity measurement input. To simplify and facilitate this requirement all Signet conductivity electrodes contain high-quality temperature sensing elements intelligently positioned for quick and accurate response.

Temperature effects on conductivity are more or less linear for normal water-based solutions, hovering around 2% per °C. However, the actual linear relationship varies considerably with the ionic composition of the solution and can range from less than 1% to more than 3% per °C.

This is true of regional ground water sources as well as for other solutions such as brackish water, acids and bases. Signet instruments allow the entry of custom linear compensation coefficients for these applications. See the instruction manual of any Signet conductivity instrument for details.

The conductivity or resistivity of pure water is not a linear function with respect to temperature. In fact, the latest Signet conductivity instruments utilize a sophisticated polynomial to compensate for the peculiar effects. For seamless measurement accuracy all current Signet conductivity instruments switch automatically between linear and pure-water compensation as certain measurement thresholds are crossed.

Temperature Compensation Exception

One exception to the requirement for temperature compensation has been established by USP (United States Pharmacopeia), which prescribes limits of acceptability for ultra-pure water quality based upon non-compensated measurements. This methodology is used to eliminate measurement variances that may result from differences in the pure-water temperature compensation algorithms used by different manufacturers of conductivity measurement equipment. A more thorough treatment of the USP standard and instrument functionality can be found in the instruction manuals of the following Signet conductivity instruments: Model 8900 Multi-Channel, Multi-Parameter Controller (Appendix D), 9950 Dual Channel Transmitter.

Technical Reference Section: Chlorine

General Theory of Operation

The process of disinfecting drinking water to remove water-borne viruses and bacteria is essential to protecting public health. Chlorination of water prior to distribution is important; however, other factors must also be taken into consideration to prevent outbreaks of water-borne diseases. Examples include protection of the water source itself, filtration of surface water supplies to remove pathogens and partials (turbidity), the integrity of the distribution piping system and ensuring there is enough Chlorine residual in the water to maintain a safe disinfectant level at the end of the distribution network.

Chlorine is very effective in killing a wide variety of common water-borne viruses such as e-coli, salmonella and leptospira. Chlorine is also very effective in the removal of foul taste and odor from water and reduces bio-slime in tanks, heat exchangers and distribution piping systems.

Chlorine is available in three forms that are used in water treatment: Chlorine gas and sodium or calcium hypochlorite.

Chlorine gas is the most cost effective method of disinfecting water and is the predominant form of chlorine used in the USA and Asia. The main concerns for the use of Chlorine gas is the need for specialized training and a response program in case of a storage tank rupture or leaks.

Hypochlorite (sodium hypochlorite or calcium hypochlorite) is the second choice of chlorination. Sodium hypochlorite is more expensive to generate on-site, but is favored in remote locations where there is electrical power available. Hypochlorites are usually selected if there is no availability of chlorine gas or if a good safety program can not be put into place.

Chloride dissociates in water to form two chemicals, hypochlorous acid (HOCl) and hypochlorite ion (OCl^-). Both are considered "free" chlorine, however, the HOCl provides the strongest disinfectant and oxidizing characteristics.
The ratio between these chemicals is pH-dependent.

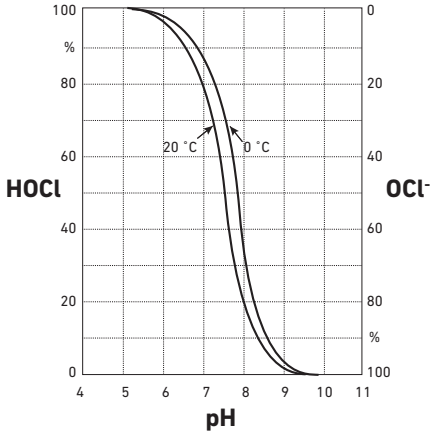

At pH 4 to 5.5, HOCl is exclusively present. At this pH, the HOCl is very aggressive and causes corrosion. When pH levels exceed 9.0, OCl- is exclusively present. Although OCl^- is still considered a disinfectant, the contact time at these pH levels need to be extended to properly disinfect. At pH 7.5, there is an even amount of HOCl and OCl^-. Processes that maintain a pH level of 7.2 create a strong presence of HOCl, which is a faster disinfectant than the OCl^-. Free chlorine is measured in parts per million (ppm) or milligrams per liter (mg/l).

Chlorine gas and sodium or calcium hypochlorite reactions produce the desired HOCl, however, the end products of the reaction are very different. The reaction of chlorine gas and water produces an end product of hydrochloric acid (HCl) which tends to lower the pH, while the Hypochlorite reaction tends to raise the pH of the water due to the creation of the hydroxyl ions.

Chlorine Gas:

Chlorine		Water		Hypochlorous Acid		Hydrochloric Acid
Cl_2	+	H_2O	→	HOCl	+	HCl

Sodium Hypochlorite:

Sodium Hypochlorite		Water		Hypochlorous Acid		Sodium Hydroxide
NaOCl	+	H_20	→	HOCl	+	Na(OH)

Calcium Hypochlorite

Calcium Hypochlorite		Water		Hypochlorous Acid		Calcium Hydroxide
$Ca\ (OCl)_2$	+	$2\ H_20$	→	2 HOCl	+	$Ca(OH)_2$

There are six factors that influence the effectiveness of chlorine.

1. pH - Chlorine is most effective between 7.2 and 7.5 when the predominate chemical is HOCl.
2. Temperature - Higher temperatures allows fast reaction.
3. Turbidity - Suspended particals act as a food source and shelter for organisms.
4. Contact time - Must be calculated using the pH level and temperature of the water.
5. Adequate mixing - Mixing of chlorine is very important.
6. Measurement control system - A system that can accurately measure the chlorine levels and control the dosing of chlorine to maintain the proper chlorine levels.

Technical Reference Section: Chlorine

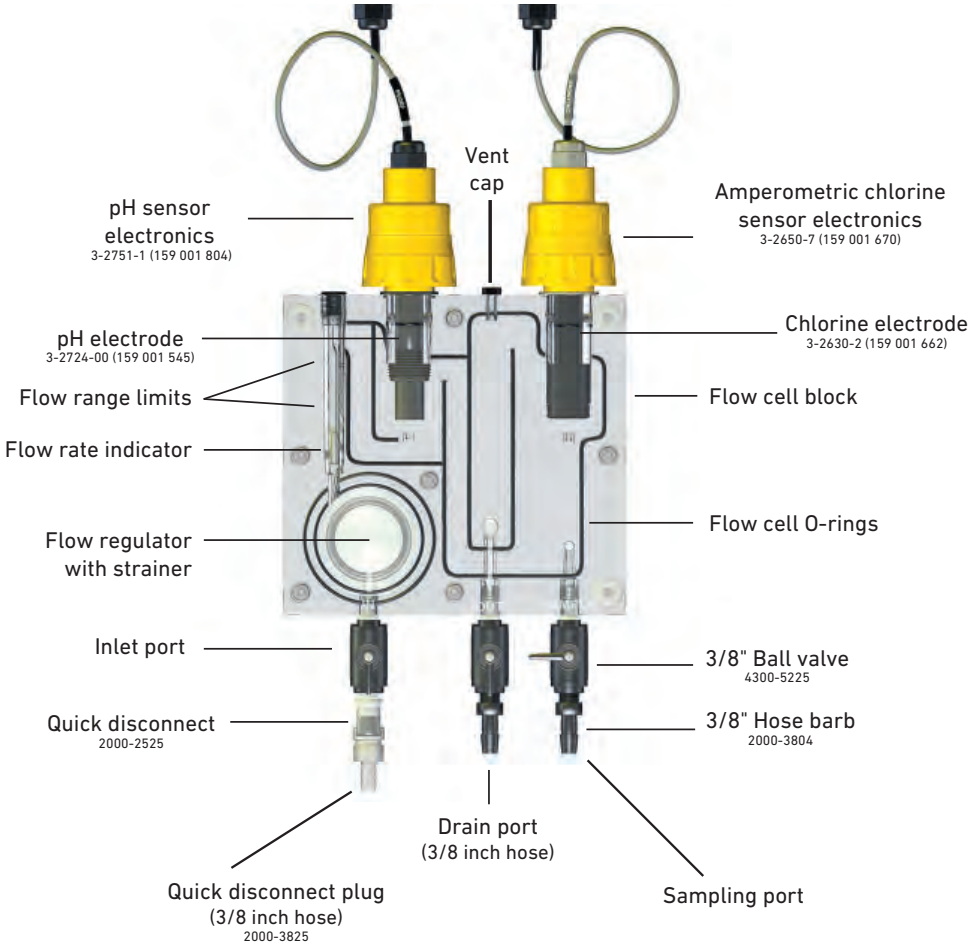

4630 Flow Cell Design

The 4630 Chlorine Analyzer System's flow cell is designed with unique features:

1. Built in flow regulator - Allows the system to be installed into any service line with pressures ranging from 15 to 120 psi (1 to 8 bar).
2. Built in VAFM - To provide at a quick glance that the water flow across the sensor membrane is good.
3. Flow cell design and sensor placement - Reduces the build up of bubbles on the sensor.
4. Sensors press fit into the flow cell - For easy removal during service and calibration.
5. Inlet port connector with check valve - The internal check valve allows the technician to interrupt flow by simply removing the connector from the flow cell.
6. Cut off valves - Provided to isolate the drain and influent flow stream
7. A sample port - Provided for DPD test verification

For gravity feed applications or systems that have an influent pressure below 15 psi will need to have the internal flow regulator removed. As long as there is a constant steady flow stream across the sensor and the VAFM indicator is above the "MiN" line accurate chlorine levels can be obtained.

- Open the flow cell by removing the six bolts
- Remove the regulator assembly
- Reinstall flow cell bolts and torque bolts per instructions on the back of the flow cell or in the manual. (see cleaning)

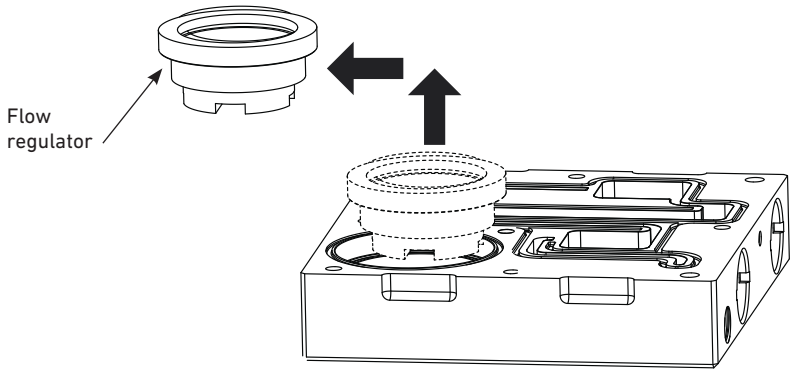

Technical Reference Section: Chlorine

2630 Amperometric Chlorine Electrode
Theory of Operation

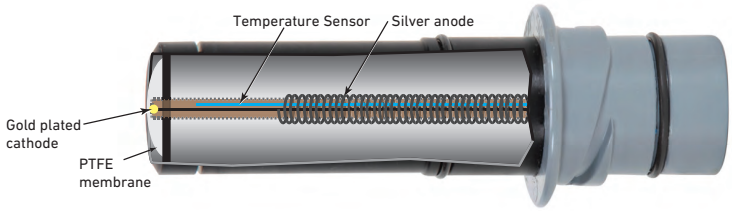

The Signet 2630 Amperometric Chlorine Electrode is an electrochemical sensor which generates an internal current that is proportional to the concentration of the chlorine in the sample.

The electrochemical sensor's construction includes a hydrophobic membrane that allows the diffusion of hypochlorous acid (HOCl), which causes a reaction with the gold plated cathode (working electrode) and destroys the HOCl. This electrochemical reaction consumes two electrons.

Cathode (working electrode): $HOCl + H^+ + 2e \rightarrow Cl^- + H_2O$ (reduction of hypochlorous acid)

A silver/silver chloride anode (counter electrode) provides the source of electrons for the cathode reaction and also acts as a reference electrode.

Anode (reference electrode): $2Cl^- + 2Ag^0 \rightarrow 2\ AgCl + 2e$ (oxidation of the silver)

The two metal electrodes are separated by an electrolyte solution that allows the transfer of ions to pass from cathode to anode, generating a small nA signal; typically 20 to 60 nA per 1 ppm of chlorine.
A PT1000 temperature element ensures accurate chlorine measurements over a wide range of temperatures.
The 2630 electrode is connected to the 2650 electronics which provides the polarizing voltage between the cathode and anode and provides chlorine information to be displayed on the 8630 Chlorine Transmitter.

2630 Sensor Maintenance
Servicing of the sensor is necessary. Sensor maintenance consists of changing the membrane when it is torn and changing the internal electrolyte solution when the system can not maintain calibration or the chlorine level drifts.

Membrane Change
1. Remove the membrane cap (do not use tools) by holding the sensor in one hand and twist off the membrane cap with the other hand
2. Inspect the sensor cathode for any defects and verify the 8 openings in the tip of the sensor are clear and unobstructed.

Electrolyte Replacement
1. Remove the membrane cap (do not use tools) by holding the sensor in one hand and twist off the membrane cap with the other hand
2. Inspect the sensor cathode for any defects and verify the 8 openings in the tip of the sensor are clear and unobstructed.
3. Turn the sensor upside down and shake the internal electrolyte out of the sensor.
4. Using the syringe provided with the sensor inject 14 ml of the new electrolyte into one of the eight holes in the sensor tip until the electrolyte bubbles out.
5. Install new membrane cap slowly.

Visit our YouTube Channel to view the latest videos

Technical Reference Section: Chlorine

Easy Cleaning of the Flow Cell

The design of the 4630 flow cell allows for easy cleaning:

1. Remove the electrodes from the flow cell
2. Remove the three knurl nuts and remove the cell from the panel
3. Remove the 6 bolts that hold the two halves of the cell together
4. Remove the O-ring string and inspect and replace if necessary

Do not use an abrasive cleaner or brush that could damage the O-ring groove.
Assembly of the flow cell requires the six bolts to be torqued in the proper sequence. The torqued information is provided on the back of the flow cell for easy reference.

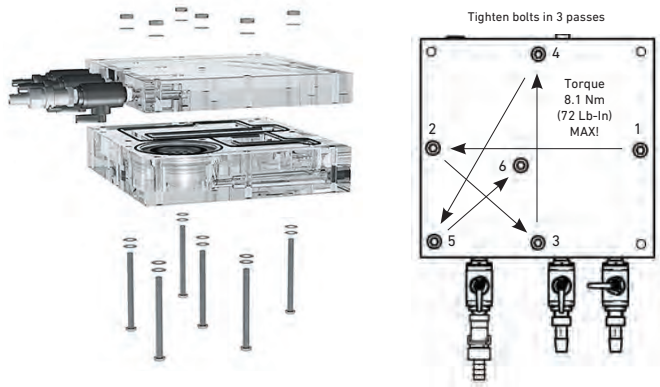

Common Terms*

Free available residual chlorine That portion of the total available residual chlorine composed of dissolved chlorine gas (Cl_2), hypochlorous acid (HOCl), and/or hypochlorite ion (OCl-) remaining in water after chlorination. This does not include chlorine that has combined with ammonia, nitrogen, or other compounds.

Total residual chlorine The amount of available chlorine remaining after a given contact time. The sum of the combined available residual chlorine and the free available residual chlorine.

Combined available residual chlorine The concentration of residual chlorine which is combined with ammonia (NH_3) and/or organic nitrogen in water as a chloramine (or other chloro derivative) yet is still available to oxidize organic matter and utilize its bactericidal properties.

Chlorine demand Chlorine demand is the difference between the amount of chlorine added to water and the amount of residual chlorine remaining after a given contact time. Chlorine demand may change with dosage, time, temperature, pH, and nature and amount of the impurities in the water.

Breakpoint chlorination Addition of chlorine to water until the chlorine demand has been satisfied. At this point, further additions of chlorine will result in a free residual chlorine that is directly proportional to the amount of chlorine added beyond the breakpoint.

Hypochlorite (Hi-poe-KLOR-ite) Chemical compounds containing available chlorine; used for disinfection. They are available as liquids (bleach) or solids (powder, granules and pellets). Salts of hypochlorous acid.

Milligrams per liter (mg/L) A measure of concentration of a dissolved substance. A concentration of one mg/L means that one milligram of a substance is dissolved in each liter of water. For practical purposes, this unit is equal to parts per million (ppm) since one liter of water is equal in weight to one million milligrams. Thus a liter of water containing 10 milligrams of calcium has 10 parts of calcium per one million parts of water, or 10 parts per million (10 ppm).

Dechlorination (dee-KLOR-uh-NAY-shun) The deliberate removal of chlorine from water. The partial or complete reduction of residual chlorine by any chemical or physical process.

Turbidity (ter-BID-it-tee) The cloudy appearance of water caused by the presence of suspended and colloidal matter. In the waterworks field, a turbidity measurement is used to indicate the clarity of water. Technically, turbidity is an optical property of the water based on the amount of light reflected by suspended particles. Turbidity cannot be directly equated to suspended solids because white particles reflect more light than dark-colored particles and many small particles will reflect more light than an equivalent large particle.

*Referenced from: http://water.epa.gov/drink/resources/glossary.cfm

Relay Information

The two most common methods of controlling a process are “on/off” and “proportional” control. In on/off control, relay setpoints are defined as either high or low limits on the process variable. When the measurement value reaches a limit the relay is energized, typically for the purpose of opening a valve or starting a pump to introduce a chemical reagent to the process. This should cause the measurement value to change in the direction of the setpoint as shown in these on/off control diagrams:

High limit on/off relay control

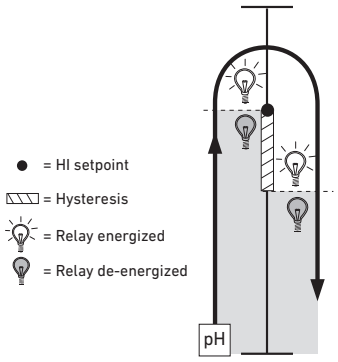

Low limit on/off control

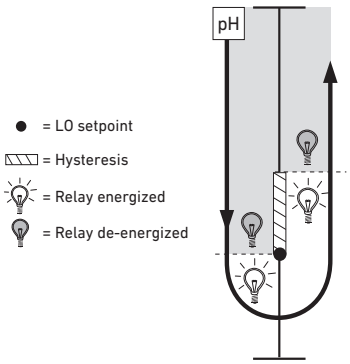

Notice the relay will not de-energize until the setpoint is exceeded by the hysteresis value. This is a programmable value and is primarily used to prevent ”relay chatter,” which occurs if a relay is set to energize and de-energize at the same value. Because of hysteresis, and because reagent delivery is fairly constant while the relay is energized, a condition known as “overshoot” is inherent to the on/off control method. Overshoot refers to the introduction of more chemical reagent than is absolutely necessary for achieving a desired adjustment to the process value, and can be expensive over time.

Proportional control is a popular alternative to the on/off control method. This method typically makes use of variable-rate metering pumps to reduce overshoot and improve precision. Establishing a proportional control scenario requires the selection of setpoint(s), deviation range(s) and maximum pulse rates.

The example shown here illustrates how two relays in ”pulse mode” can be used to proportionally control pH within a desired range, or to a single setpoint. This is called “Dual Proportional Control.” Of course, a single relay in proportional pulse mode can be used to establish a high or low limit and will also reduce overshoot.

Metering pumps are idle at and between setpoints. When a setpoint is exceeded, the pump begins delivering reagent at a rate proportional to the difference between the measurement value and the setpoint. The larger the difference, the faster the delivery. The programmed deviation value defines how quickly the maximum pulse rate is reached. Depending on the input requirements of the metering pump, proportional control can also be accomplished with scaleable 4 to 20 mA outputs instead of pulsing relays or open collectors.

Dual proportional pulse relay control

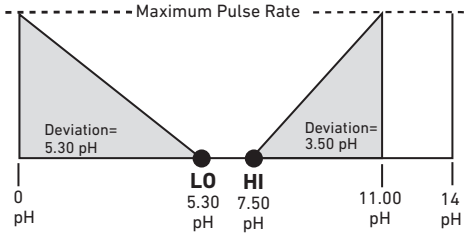

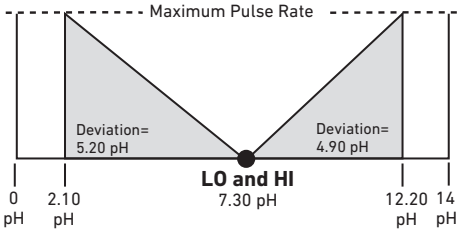

Notes:

Open Collector Output

Many Signet instruments and sensors feature "Open Collector Outputs" for purposes of signal transmission, alarming, control signal output, etc. Although such outputs allow for a lot of wiring flexibility, care must be taken not to destroy the circuits via incorrect polarity, over-voltage, transients or current overload.

Below is an explanation of proper wiring and dimensioning of related circuit components. Please note that the following recommendations may or may not apply to other manufacturer's equipment.

1. Function

Open Collector ("OC") outputs are low powered, solid state switches. Although the term "Open Collector" stipulates the use of bipolar transistors (NPN-type or PNP-type) as a switch, nowadays Field Effect Transistors (FET or MOSFET) are used. Unlike electromechanical switches (e.g. push buttons or dry contact relays), these OC switches are very fast, use little power, are inexpensive, do not bounce and do not wear.

However, OCs are also more limited in terms of voltage and current rating as well as being polarized (i.e. they have a "plus" and "minus" terminal and thus DC only switching capability). They are less tolerant to overload abuse than electromechanical devices. Usually these switches have higher resistance and voltage drop.

2. Sensor Wiring

A typical example of the need for high speed switching capability is the OC frequency output of Signet flow sensors like 3-2536 or 3-2540. Signal frequencies can reach several hundred pulses per second while voltage and current requirements are small enough, allowing the use of a transistor switch. For each output pulse this switch connects the signal output to the negative supply or ground terminal of the sensor and is therefore an "NPN" style output.

Signet does not produce sensors with PNP style outputs (which connect the signal output internally to the positive supply terminal).

Most indicating instruments or control system inputs require a signal voltage of 0 to 5 V (TTL or CMOS logic levels) or 0 to 24 V. Therefore, Open Collector output circuits must be complemented with a "Pull-Up-Resistor" to function properly. Please see the following example diagram for wiring with a PLC input:

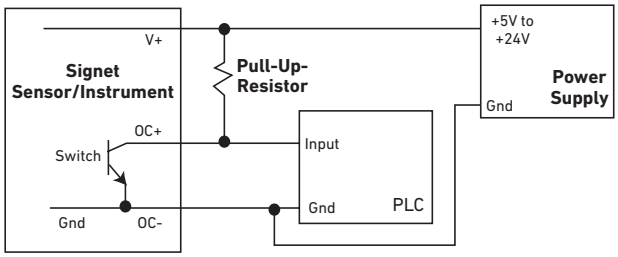

Do not exceed the absolute maximum voltage rating of the OC output as listed in the sensor specifications, normally 27 or 30 Volt, DC only. This includes changes to power line fluctuations, transients or power supply instability, otherwise damage to the OC will occur.

Please note that the voltage connected to the positive sensor supply (V+) must correspond to the required high-level PLC input voltage (i.e. if the high-input voltage of the PLC is 24 V, then the pull-up must be supplied with 24 V). If the input is "TTL-Level" or "CMOS-Level," that means 5 V for high level, then the pull-up should not be connected with a supply higher than 5 V.
Signet instruments already have the pull-up-resistor and the sensor power supply built into the instrument. No external pull-up-resistors are required.

Open Collector Output (continued)

3. Instrument Output Wiring

Open collector control and alarm outputs on Signet instruments (i.e. ProcessPro® or ProPoint® series) are electrically isolated from the instrument's power supply. That means these can be used in the above mentioned NPN configuration as well as in PNP configuration, if required. Below are a few sample circuits:

- PLC Wiring "PNP" style

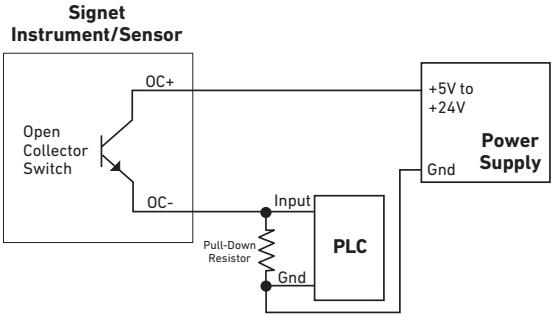

- PLC Wiring "NPN" style

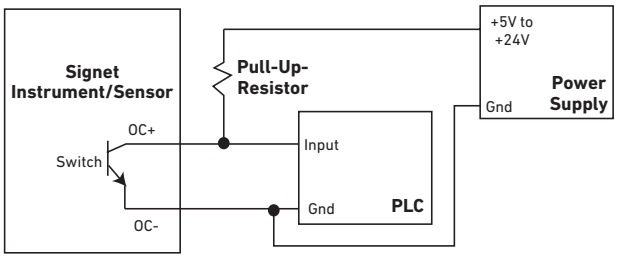

- Alarm circuit or alarm lamp wiring to a single Signet instrument

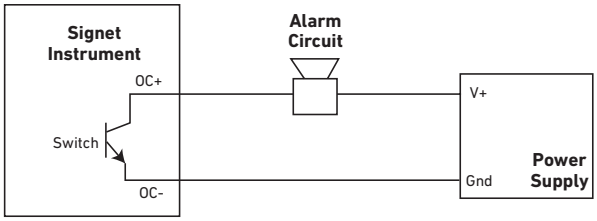

- Alarm circuit or alarm lamp wiring to serve multiple Signet instruments
  - Triggers the alarm if any one of the instruments open collector outputs are on.

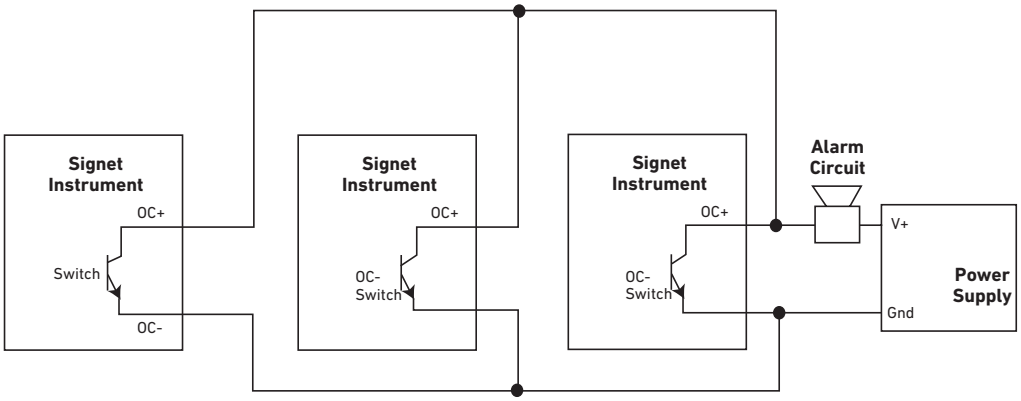

Open Collector Output (continued)

4. Voltage and Current Limitation

As mentioned before, the supply voltage in the OC output circuit MUST be limited to the specified maximum OC voltage (see operating manual for specific instrument). The use of a quality regulated 5 V, 12 V or 24 V (depending on the application) power supply is recommended.

The current through the Open Collector switch must be limited. Typical OC outputs allow only for 10 to 50 mA switch current (please consult manual). Exceeding this current limit can burn out the OC output components immediately. Please see the following section on how to dimension the loads.

5. Load and Pull-Up/Down Resistor Considerations

By utilizing basic arithmetic and Ohm's law, one can determine the safe limits of load resistance. When the OC switch is closed, almost the entire supply voltage is applied to the load, (i.e. the pull-up or pull-down resistor, the alarm horn input, a potential power relay coil or annunciator lamp). The resulting current through the load and through the OC switch, as well, can be calculated as:

(Current) = (Supply Voltage)/(Load Resistance)

- Example 1:
  The supply voltage is 24 V and a pull-up-resistor of 10 kΩ is used. Current is 24/10,000 = 2.4 mA

  (If the OC current rating is 10 mA, then in this example, it would be considered safe.)

- Example 2:
  The supply voltage is 12 V and a horn with a resistance of 100 Ω is used
  Current is 12/100 = 120 mA

  (Even if the OC current rating is 50 mA, this load will damage the instrument)

6. Transient Protection

There are several "difficult" load cases that must be considered:

- Inductive loads:
  These can be power relay or other solenoids, motors, alarm horn coils, etc. Such loads generate very high voltage spikes every time the load switches. If such a load is unavoidable, the use of transient suppression components, or Signet RC-filters (3-8050.396), or snubbers, wired parallel to the load is required. This is critical, as a single transient pulse may destroy the output.

- Capacitive loads:
  This type of load should be rare but can occur if the load contains an internal power supply/regulator that is fed from the output circuit. In such a case, it must be assured that the in-rush current does not exceed the OC current rating.

- Incandescent lamps:
  Such lamps have a very high start-up current until the filament glows and the current settles to the specified value. The use of incandescent lamps on an OC output is not recommended. An LED type annunciator should be used instead.

7. "Active High" and "Active Low" Setting

Depending on the desired function of the circuit attached to the OC output, it may be necessary to have the OC output switch turned "on" or "off" when the criteria for the activation of this output are met.

By default, Signet instruments are set to operate in "active low" mode. This means when the user-defined condition for the activation is met (e.g. exceeding of an alarm limit) the OC switch is turned "on."

If wired as standard "NPN-style" output (see previous page) the logic level of the attached control system or PLC input consequently becomes "low" logic level.

If a high input logic level is required for activation, it can be accomplished by changing the OC output function to "active high" in the menu system of the instrument. Most Signet instruments allow for this option.

8. Fail-Safe Behavior

No matter what the setting, most OC outputs of Signet instruments turn off when the instrument loses power. This must be taken into account when evaluating system failure consequences. If the system layout requires a "closed" or "on" condition for the output in case of power loss, a mechanical dry contact relay (NC contacts) must be used instead of the OC output.

Open Collector Output (continued)

Control Outputs
Many Signet products offer control outputs that can be categorized into three categories: Mechanical Relay, Solid-State Relay and Open Collector. Each control output offers benefits and limitations based on the application requirements. See below for comparisons.

Open Collector
Benefits:
- Longer life than a Mechanical Relay
- No moving parts
- Can switch DC voltage only (typically < 30 VDC)
- Faster ON/OFF switching capabilities than Mechanical Relays

Considerations:
- Can only be used with DC voltage
- Polarity very important when wiring
- Not recommended for use with inductive loads
- Lower voltage and current ratings than Mechanical Relays
- Typically should not apply current > 25 mA

Solid-State Relays
Benefits:
- Has isolated outputs (optically)
- Can switch DC voltage (typically > 30 VDC)
- Can switch AC voltage (typically > 42 VAC) 50 mA DC / 50 mA AC
- Longer life than a Mechanical Relay
- No moving parts
- Faster ON/OFF switching capabilities (Equal rise/fall times)

Considerations:
- Not recommended for use with:
    - Inductive loads (ex. Solenoid, Pumps)
    - If using inductive loads, snubbers (RC Filter) can prevent relay damage
    - Lower voltage and current ratings than Mechanical Relays

---

Mechanical Relays
Benefits:
- Can switch line voltage (typically > 120 to 240 VAC)
- Can switch DC voltage (typically < 30 VDC @ 5A)
- Has a large current rating (typically 5 A)
- Larger voltage and current ratings than Solid-State Relay and Open Collector Outputs

Considerations:
- Slower ON/OFF switching capabilities than Solid-State Relay and Open Collector Outputs
- Mechanical contacts can burn/wear over time
- Snubbers (RC Filter), Signet 3-8050.396, can prolong contact life

RC Filter

RC Filter Kits are recommended when using a Signet transmitter or controller with mechanical relays, and/or the external relay module 3-8059 to switch on and off inductive loads. Signet RC Filter Kits provide protection and extend the life of the relay by preventing premature wearing of the relay contacts, usually caused by voltage/current arching and line noises generated by the activation and deactivation of mechanical relays.

RC Filter Kit (3-8050.396) comes with two RC Filter Assemblies.

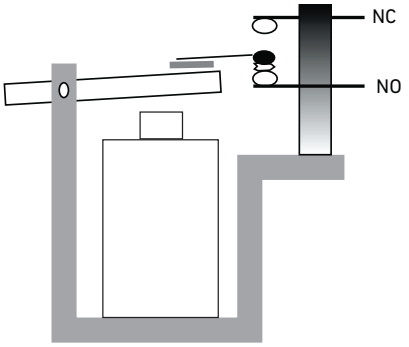

During the activation and deactivation of a relay, a spark can be generated on the surface of the relay contacts. This spark, over a period of time, melts the surface of the contacts which will prevent the contacts from making a physical connection.

Figure A is suitable for AC and DC applications.

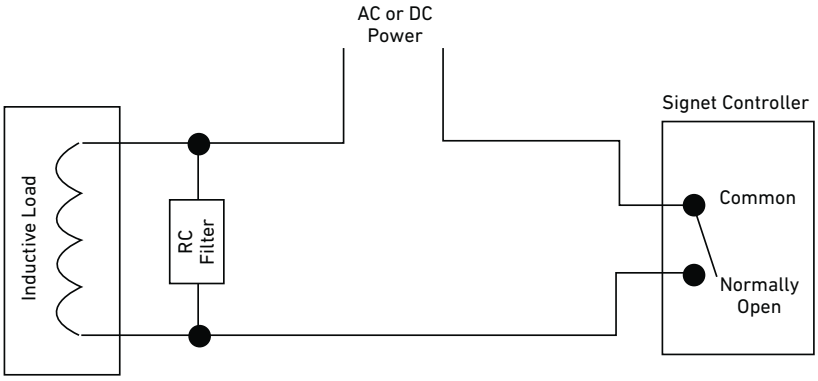

Fig. A

Figure B is also suitable for AC and DC applications. However, if this configuration is used with an AC power source, verify that the impedance of the load is less than the impedance of the RC filter; current leak through the filter may occur and cause the device to be constantly on.

- R = 47 Ω
- C = 0.01 µF

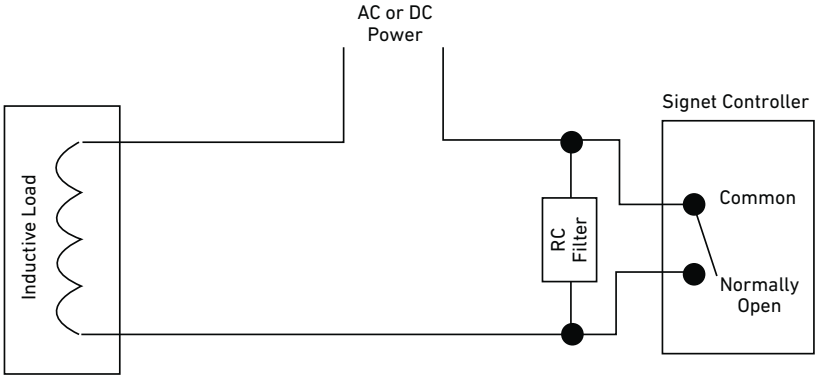

Fig. B

Conversion Factors

Volume						
To Convert	**Into**	**Multiply by**		**To Convert**	**Into**	**Multiply by**
Gallons (U.S.)	fl. oz. (U.S.)	128		Liters	fl. oz. (U.S.)	33.81
Gallons (U.S.)	cubic in. (in3)	231		Liters	cubic in. (in3)	61.02
Gallons (U.S.)	cubic ft. (ft3)	0.1336		Liters	cubic ft. (ft3)	0.0353
Gallons (U.S.)	liters	3.785		Liters	Gallons (U.S.)	0.2642
Gallons (U.S.)	cubic meter (m3)	0.00379		Cubic meter (m3)	cubic ft. (ft3)	35.31
Gallons (U.S.)	pounds	8.33		Cubic meter (m3)	Gallon (UK)	219.97
Gallons (U.S.)	cubic centimeter (cm3 or cc)	3785.41		Cubic meter (m3)	Gallons (U.S.)	264.17
Gallons (U.S.)	Gallon (UK)	0.833		1 Acre foot	Gallons (U.S.)	325,853
Gallons (U.S.)	milliliter (mL)	3785.41		Cubic ft. (ft3)	Gallon (UK)	6.23
Cubic ft. (ft3)	liters	28.32		Cubic ft. (ft3)	Gallons (U.S.)	7.48
Cubic ft. (ft3)	cubic meter (m3)	0.028317				

Pressure						
To Convert	**Into**	**Multiply by**		**To Convert**	**Into**	**Multiply by**
psi	bar	0.069		bar	psi	14.5
psi	kPa	6.89		bar	kPa	100
psi	atmosphere	0.068		bar	atmosphere	0.987
psi	mm of Hg	51.71		bar	mm of Hg	750.06
atmosphere	bar	1.013		kPa	bar	0.01
atmosphere	psi	14.696		kPa	psi	0.145
atmosphere	kPa	101.325		kPa	atmosphere	0.00987
atmosphere	mm of Hg	760		kPa	mm of Hg	7.5

Temperature						
To Convert	**Into**	**Multiply by**		**To Convert**	**Into**	**Multiply by**
Deg F	Deg C	(F-32)*0.5555		Deg C	Deg F	C*1 .8+32

Length						
To Convert	**Into**	**Multiply by**		**To Convert**	**Into**	**Multiply by**
inch	meter (m)	0.0254		foot	centimeter (cm)	30.48
inch	millimeter (mm)	25.4		cm	foot (ft.)	0.0328
inch	centimeter (cm)	2.54		cm	inch (in.)	0.3938
foot	meter (m)	0.3048		m	foot (ft.)	3.28
foot	millimeter (mm)	304.8		m	inch (in.)	39.37

Flow Rate						
To Convert	**Into**	**Multiply by**		**To Convert**	**Into**	**Multiply by**
gallon (US)/min	m3/h	0.227		m3/h	l/s	0.2778
gallon (US)/min	l/s	0.063		m3/h	ft3/min	0.589
gallon (US)/min	ft3/min	0.134		m3/h	gallon (US)/min	4.4
ft3/min	m3/h	1.699		l/s	m3/h	3.6
ft3/min	l/s	0.472		l/s	ft3/min	2.12
ft3/min	gallon (US)/min	7.48		l/s	gallon (US)/min	15.85

Weight						
To Convert	**Into**	**Multiply by**		**To Convert**	**Into**	**Multiply by**
ounce(Av.)	grams (g)	28.35		grams (g)	ounce(Av.)	0.035274
pound(Av.)	grams (g)	453.59		grams (g)	pound(Av.)	0.0022046
pound(Av.)	ounce(Av.)	16				

Area						
To Convert	**Into**	**Multiply by**		**To Convert**	**Into**	**Multiply by**
Acre	Hectare	0.4047		square meter (m2)	Hectare	0.0001
Acre	square ft. (ft2)	43559.66		square meter (m2)	square ft. (ft2)	10.764
Acre	square meter (m2)	4046.82		square centimeter (cm2)	square ft. (ft2)	0.00108
Acre	square kilometer (km2)	0.004047		square inch (in2)	square centimeter (cm2)	0.155

Nominal Pipe Sizes
Below are the NPS (Nominal Pipe Sizes) inch names and their metric equivalents called DN or "diameter nominal." The metric designations conform to International Standards Organization (ISO).

Metric DN (mm)	NPS (inch)
6	1/8
8	1/4
10	3/8
15	1/2
20	3/4
25	1
32	1.25
40	1.5
50	2
65	2.5
80	3
100	4
125	5
150	6
200	8
250	10
300	12
350	14
400	16
450	18
500	20
550	22
600	24
650	26
700	28
750	30
800	32
900	36
1000	40
1100	42
1200	48
1400	54
1500	60
1600	64
1800	72
2000	80
2200	88

Equations:
Flow:

- To convert fluid velocity into a volumetric flow rate.
  GPM = (ID^2 x Feet/sec)/0.4084967 **(To calculate GPM enter ID in inches.)**
  LPM = 0.0471189 x ID^2 x m/s **(To calculate LPM enter ID in millimeters.)**
- To convert volumetric flow rate into fluid velocity.
  Feet/sec = (GPM x 0.4084967)/ID^2 **(To calculate Feet/sec enter ID in inches.)**
  m/s = (LPM x 21 .22291)/ID^2 **(To calculate m/s enter ID in millimeters.)**

Conductivity: Conductivity = 1/Resistivity
1/Ohm = 1 Siemen = 1 mho
Measured conductivity = [(solution conductivity) x (electrode sectional area)]/electrode separation
Measured conductivity = Siemen/cm

Choosing the Correct pH/ORP Electrode

Application	2724-2726 DryLoc® Electrodes	2734-2736 DryLoc® Electrodes	2774-2777 Electrodes	2764-2767 Differential Electrodes
Aquatic Animal Life Support Systems	✔	?	⊘	⊘
Boiler Make-Up Water (20 µS)	✔	⊘	⊘	⊘
Brackish Water Influent	✔	?	⊘	?
Chemical Injection Mixing Tank	✔	?	⊘	?
Chemical Processing	✔	?	?	?
Chlorine Dioxide Control Effluent	✔	?	⊘	?
Chrome Reduction	⊘	?	✔	?
Circuit Board Etching	⊘	?	✔	?
Circuit Board Film Processing	⊘	?	✔	?
Coagulation and Flocculation	✔	?	⊘	?
Commercial Aquariums	✔	?	⊘	?
Commercial Swimming Pools	✔	?	⊘	⊘
Cooling Towers	✔	?	⊘	⊘
Cyanide Destruction	⊘	⊘	⊘	✔
Dechlorination Monitoring	✔	?	⊘	⊘
Desalination Plants-Effluent	✔	?	⊘	⊘
Desalination Plants-Influent	✔	?	⊘	⊘
Dialysis	✔	?	⊘	⊘
Drinking Water Quality	✔	?	⊘	⊘
Effluent Monitoring (discharge to local water sources)	✔	?	⊘	⊘
Fish Farming	✔	?	⊘	?
Food and Beverage Manufacturing	✔	?	⊘	?
Fruit and Vegetable Rinsing	✔	?	?	?
Greenhouses	✔	?	⊘	⊘
Heavy Metal Recovery	⊘	?	✔	?
Influent Monitoring (to neutralization processes)	✔	?	⊘	?
Neutralization Systems	✔	?	?	?
Ozone Injection Effluent	✔	?	⊘	⊘
Plating Baths	✔	?	?	?
Process Control (verify chemical compatibility)	✔	?	⊘	?
Pulp and Paper	⊘	⊘	⊘	✔
Reverse Osmosis	✔	?	⊘	⊘
Rinse Water	✔	?	⊘	?
Scrubbers	✔	?	⊘	?
Sulfur Recovery	✔	?	⊘	?
Surface Finishing	⊘	?	✔	?
Textile Dye Process	⊘	?	✔	?
Toxics Destruction	⊘	?	✔	?
Wastewater Neutralization Tanks	✔	?	⊘	?
Wastewater Treatment	✔	?	⊘	?
Water Parks	✔	?	⊘	?
Water Treatment (boilers, cooling towers, pH neutralization, make-up water)	✔	?	⊘	⊘
Wholesale Nurseries	✔	?	⊘	⊘
Zoo Exhibit Water Treatment	✔	?	⊘	?

Choosing the right Signet pH/ORP electrode is important and unique for each application.

- The 2724 Electrode series is used for all general purpose, mild applications.
- The 2734 Electrode series is a high performance electrode used for general purpose and aggressive applications.
- The 2774 Electrode Series is used for more aggressive applications with ions such as mercury, copper, lead and perchlorate.
- The 2764 Electrode Series is a rebuildable sensor and is used for more aggressive applications with ions such as mercury, copper, lead and perchlorate, bromides, iodides, cyanides, and sulfides.

Refer to the application matrix on the left for assistance in your selection.

Refer to following guide to choose the right sensor for your application temperature range.

	Application Temperature Range														
	-10°C	0°C	10°C	20°C	30°C	40°C	50°C	60°C	70°C	80°C	85°C	90°C	95°C	100°C	110°C
	14°F	32°F	50°F	68°F	86°F	104°F	122°F	140°F	158°F	176°F	185°F	194°F	203°F	212°F	230°F
272X Series Sensors															
2724															
2725															
2726															
2726-LC															
2726-HF															
273X Series Sensors															
2734															
2735															
2736															
2774 Series Sensors															
2774															
2775															
2776															
2777															
2774-HT*															
2776-HT*															
2764 Series Sensors															
2764															
2765															
2766															
2767															
2756/2757 Wet-Tap Sensors															
2756-WTP															
2757-WTP															
*Special order only															

Legend

✔	Best choice for this application
⊘	DO NOT use this electrode; it is not required or it is an incorrect choice
?	In certain applications, this is a good alternative to the "best choice" option

Notes:

Flow Application Assistance

Please provide as much detail as possible for prompt assistance. Send the completed form to Technical Support at your local GF sales office.

Date: _____ Company: _____ Contact: _____

Address: _____ City: _____ State: _____

Phone: _____ Ext: _____ Email: _____

Name of project : _____ GF Distributer: _____

GF Contact: _____ Phone: _____

Description of application: _____

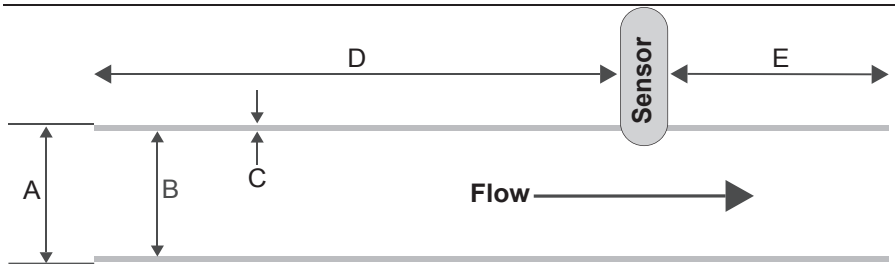

Figure 1: Pipe and straight run dimensions

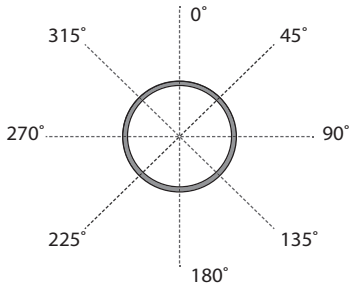

Figure 2: Sensor orientation

Pipe Size: _____ Pipe Material: _____

Schedule: _____ Flow Direction: Vertical ☐ Horizontal ☐ Pipe full with flow? Y ☐ N ☐

Pipe Dimensions: A: _____ B: _____ C: _____ Pipe full with no flow? Y ☐ N ☐

Straight Run Pipe: D: _____ E: _____ Sensor Orientation: _____ °

Obstructions 50 pipe IDs upstream of sensor: _____

Flow Rate: Min: _____ Max: _____ Nominal: _____

Fluid Temperature: Min: _____ Max: _____ Nominal: _____

Line Pressure: Min: _____ Max: _____ Nominal: _____

Conductivity/Resistivity: Min: _____ Max: _____ Nominal: _____

Sensor Mounted: Indoor ☐ Outdoor ☐ Indicator Mounted: Indoor ☐ Outdoor ☐

Fluid to be Measured: _____ (_____ %), _____ (_____ %)

Fluid Viscosity: _____ Specific Gravity: _____

Percent Solids: _____ Description: _____ Size of Solids: _____

Cable run from sensor indicator: _____ Available Power: _____

Hazardous Requirements: Y ☐ N ☐ *(type):* _____

Required outputs & quantity: _____

Required Approvals: _____

Notes *(Please include all required outputs, relays and any miscellaneous information):*

pH/ORP Application Assistance

Please provide as much detail as possible for prompt assistance. Send the completed form to Technical Support at your local GF sales office.

Date: _____ Company: _____ Contact: _____

Address: _____ City: _____ State: _____

Phone: _____ Ext: _____ Email: _____

Name of project : _____ GF Distributer: _____

GF Contact: _____ Phone: _____

Description of application: _____

_____

Process pH: Min: _____ Max: _____ Nominal: _____ Control Range: _____

ORP: Min: _____ Max: _____ Nominal: _____ Control Range: _____

Pressure: Min: _____ Max: _____ Nominal: _____ Control Range: _____

Fluid Temp: Min: _____ Max: _____ Nominal: _____ Control Range: _____

Flow Rate: Min: _____ Max: _____ Nominal: _____ Control Range: _____

Cond/Resist: Min: _____ Max: _____ Nominal: _____ Control Range: _____

Pipe Mount: Y ☐ N ☐

Pipe/Tank Material: _____ **Size:** _____ **Schedule:** _____ **Angle:** Vertical ☐ Horizontal ☐

Tank Mount: Y ☐ N ☐

Tank Shape: Round ☐ Square ☐ Rectangle ☐ Other: _____

Features: Open Top ☐ Flat Top ☐ Dome Top ☐ Flat Bottom ☐ Conical Bottom ☐

Tank Volume: _____ **Tank Material:** _____ **Tank Liner:** _____

Fill Rate: _____

Fluid to be Measured: _____ (_____%), _____ (_____%)

Fluid Viscosity: _____ **Specific Gravity:** _____

Percent Solids: _____ **Description:** _____ **Size of Solids:** _____

pH/ORP Monitoring: Y ☐ N ☐ **pH/ORP:** Min: Max: Nominal:

pH/ORP Adjusting: Y ☐ N ☐ **Incoming:** Min: Max: Nominal:

Adjusted: Min: Max: Nominal:

Regeant Chemical : _____ (_____%), _____ (_____%)

How is reagent being delivered? _____

Batch Treatment ☐ **Continuous Flow** ☐ **Single Pass** ☐ **Recirculating** ☐

Retention Time: _____ **Stages of Treatment:** _____ **Mixing Method:** _____

Sensor Mounted: Indoor ☐ Outdoor ☐ **Indicator Mounted:** Indoor ☐ Outdoor ☐

Sensor Mounted: Inline ☐ Submersible ☐ **Indicator Mounted:** Integral ☐ Remote ☐ Panel ☐

Sensor Location/Orientation: _____

Cable run from sensor to indicator: _____

Available Power: _____ **Quantity of sensors and transmitters:** _____

Required Approvals: _____

Notes *(Please include all required outputs, relays and any miscellaneous information):*

_____

Conductivity Application Assistance

Please provide as much detail as possible for prompt assistance. Send the completed form to Technical Support at your local GF sales office.

Date: _____ Company: _____ Contact: _____

Address: _____ City: _____ State: _____

Phone: _____ Ext: _____ Email: _____

Name of project : _____ GF Distributer: _____

GF Contact: _____ Phone: _____

Description of application: _____

_____

Pipe/Tank Material: _____ Size: _____ Schedule: _____ Angle: Vertical ☐ Horizontal ☐

Cond/Resist: Min: _____ Max: _____ Nominal: _____

Line Press: Min: _____ Max: _____ Nominal: _____

Fluid Temp: Min: _____ Max: _____ Nominal: _____

Flow Rate: Min: _____ Max: _____ Nominal: _____

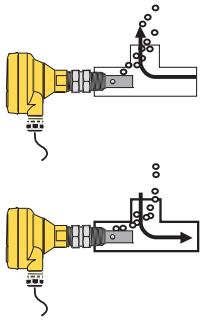

*Sensor mounted in side of tee with integral sensor electronics. Hole in sensor pointing upwards to avoid air bubble entrapment

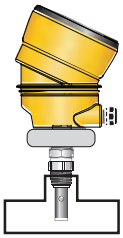

*In-line sensor with integral mount indicator & conductivity module (May require additional fitting)

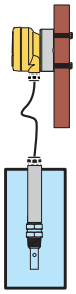

*Submersible sensor with remote mounted sensor electronics

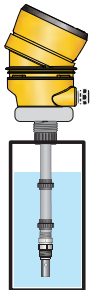

*Submersible sensor with integral mount indicator & conductivity module

Sensor Mounted: Indoor ☐ Outdoor ☐ Indicator Mounted: Indoor ☐ Outdoor ☐

Sensor Mounted: Inline ☐ Submersible ☐ Indicator Mounted: Integral ☐ Remote ☐ Panel ☐

Communication Requirements: Display ☐ Blind ☐ Relay ☐ HART ☐ 4 to 20 mA ☐

Sensor Location/Orientation: _____

If Submersible, tank size and shape: _____

_____

Fluid to be Measured: _____ (_____%), _____ (_____%)

Fluid Viscosity: _____ Specific Gravity: _____

Percent Solids: _____ Description: _____ Size of Solids: _____

Cable run from sensor indicator: _____

Available Power: _____ Quantity of sensors and transmitters: _____

Required Approvals: _____

Notes *(Please include all required outputs, relays and any miscellaneous information):*

_____

_____

_____

Level Application Assistance

Please provide as much detail as possible for prompt assistance. Send the completed form to Technical Support at your local GF sales office.

Date: _____ Company: _____ Contact: _____

Address: _____ City: _____ State: _____

Phone: _____ Ext: _____ Email: _____

Name of project : _____ GF Distributer: _____

GF Contact: _____ Phone: _____

Description of application: _____

Tank Shape: Round ☐ Square ☐ Rectangle ☐ Other: _____

Orientation: Vertical ☐ Horizontal ☐ Location: Indoor ☐ Outdoor ☐

Features: Open Top ☐ Flat Top ☐ Dome Top ☐ Flat Bottom ☐ Conical Bottom ☐

Tank Volume: _____ *(gallons)* Tank Material: _____ Tank Liner: _____

Fill Rate: _____ *(gpm)*

Dimensions: A: _____ B: _____ C: _____

D: _____ E: _____ F: _____

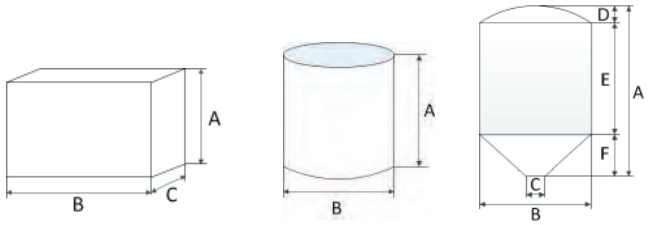

*Please attach a sketch of any qualities or specifications unique to your tank application

Sensor Requirement				Sensor Install		Fill Location	
		Multipoint switch	☐				
Radar *(guided)*	☐	Vibration fork	☐	Tank adapter	☐	Top	☐
Radar *(unguided)*	☐	Ultrasonic gap	☐	Standpipe	☐	Side	☐
Ultrasonic	☐	Float *(guided)*	☐	Side Mount	☐	Bottom	☐
Hydrostatic *(pressure)*	☐	Float *(unguided)*	☐	Other: _____			

Submerged items in tank (ladder, heater, mixer, plumbing, etc.): _____

Fluid to be Measured: _____ (_____ %), _____ (_____ %)

Fluid Dielectric Constant: _____

Fluid Temperature: *(°F)* Min: _____ Max: _____

Vessel Pressure: *(psi)* Min: _____ Max: _____

Vapors/Condensation: Y ☐ N ☐ Foaming: Y ☐ N ☐ *(describe):* _____

Agitation: Y ☐ N ☐ *(mixer, air sparge, recirc pump, etc.):* _____

Hazardous Requirements: Y ☐ N ☐ *(type):* _____

Required Approvals: _____

Notes *(Please include all required outputs, relays and any miscellaneous information):* _____

Operating Temperature/Pressure Graphs: Flow Sensors

Note:
The pressure/temperature graphs are specifically for the Signet sensor. During system design the specifications of all components must be considered. In the case of a metal piping system, a plastic sensor will reduce the system specification. When using a PVDF sensor in a PVC piping system, the fitting will reduce the system specification.

Model 525

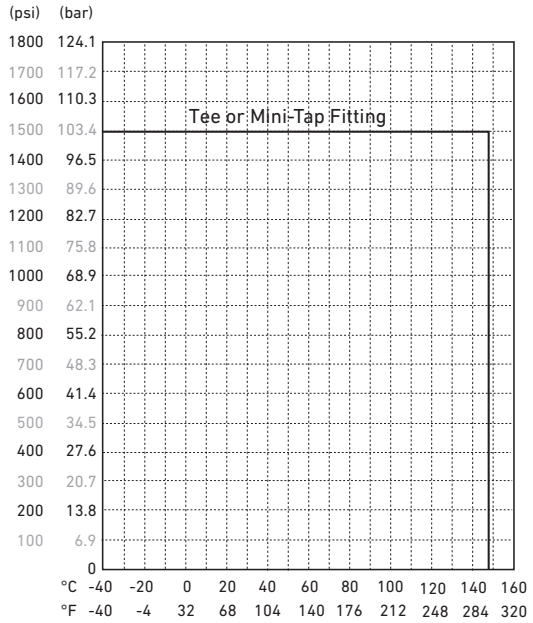

Model 515

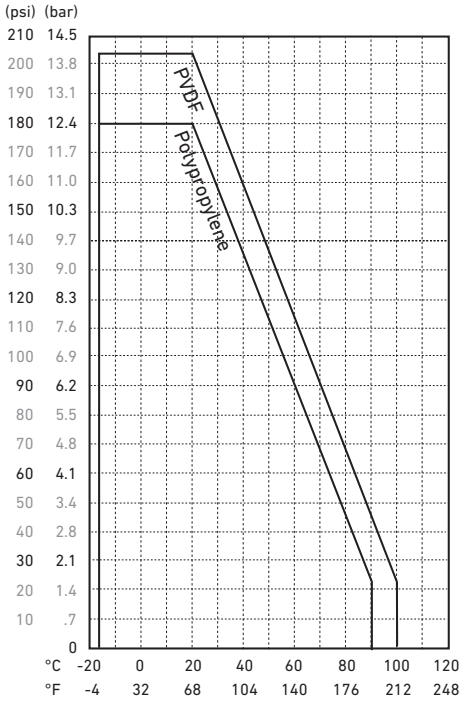

Model 2507

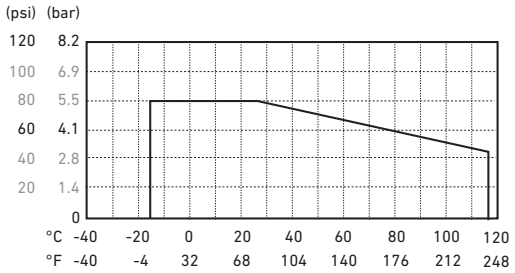

Model 2100

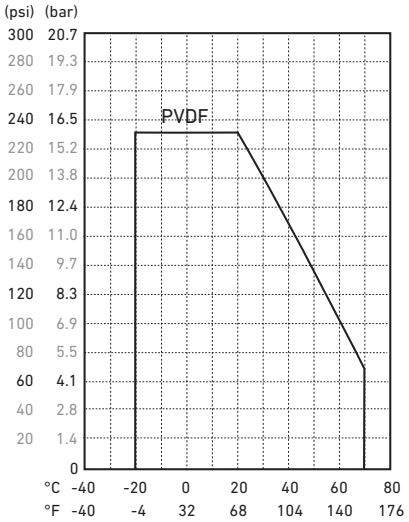

Model 2540

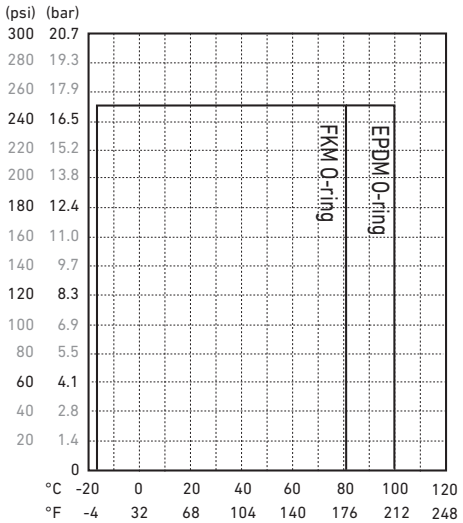

Operating Temperature/Pressure Graphs: Flow Sensors

Note:
The pressure/temperature graphs are specifically for the Signet sensor. During system design the specifications of all components must be considered.
In the case of a metal piping system, a plastic sensor will reduce the system specification. When using a PVDF sensor in a PVC piping system, the fitting will reduce the system specification.

Model 2551

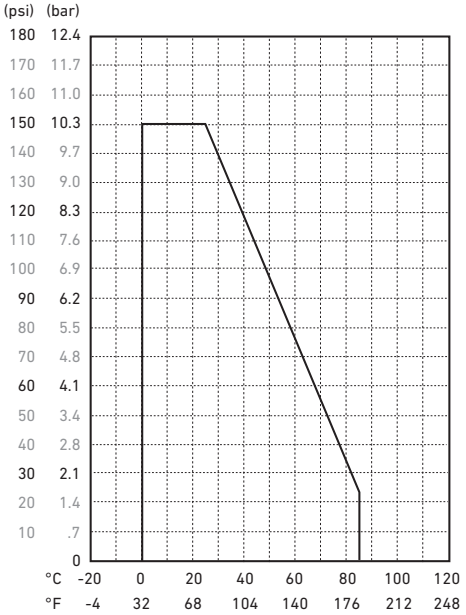

Models 2536 & 2537

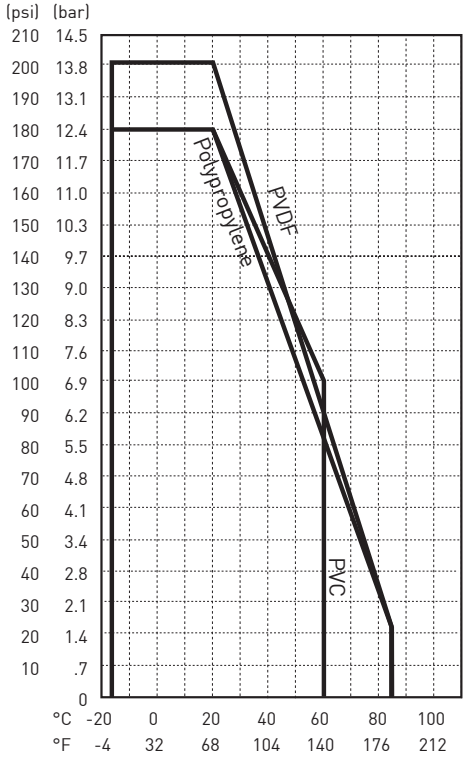

*2537 Only: Graph applies to sensor wetted materials only. Maximum ambient temperature is 65°C.

Model 2552

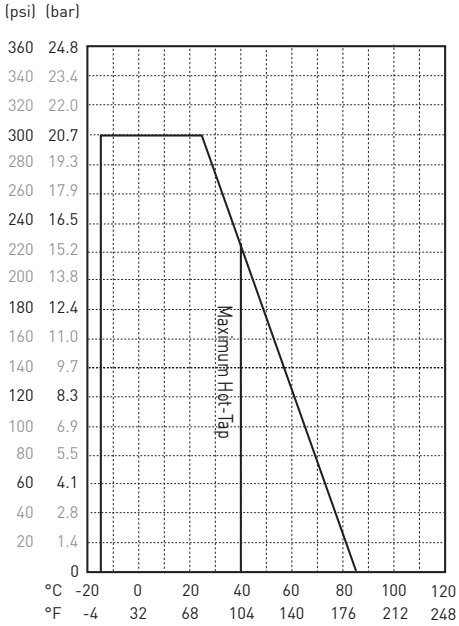

Model 2580

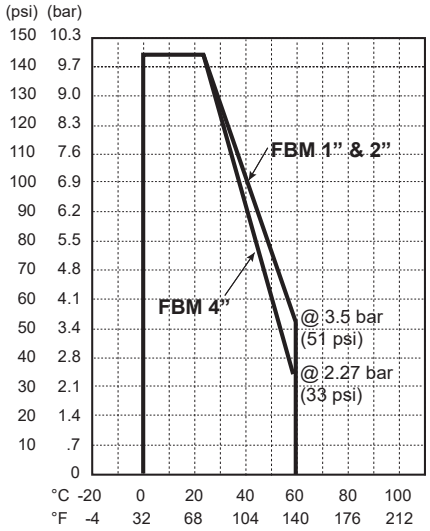

Pressure Drop Graphs: Flow Sensors

Note:
The pressure/temperature graphs are specifically for the Signet sensor. During system design the specifications of all components must be considered. In the case of a metal piping system, a plastic sensor will reduce the system specification. When using a PVDF sensor in a PVC piping system, the fitting will reduce the system specification.

Model 2000 - Low Flow

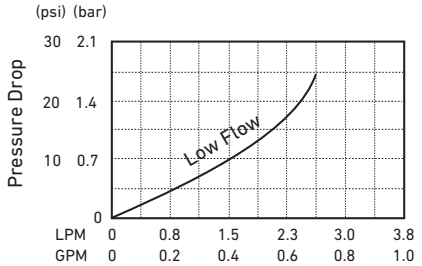

Model 2000 - High Flow

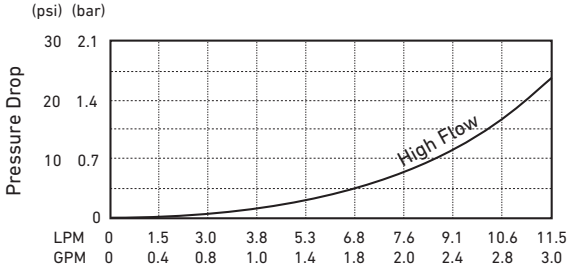

Model 2100 - Low Flow

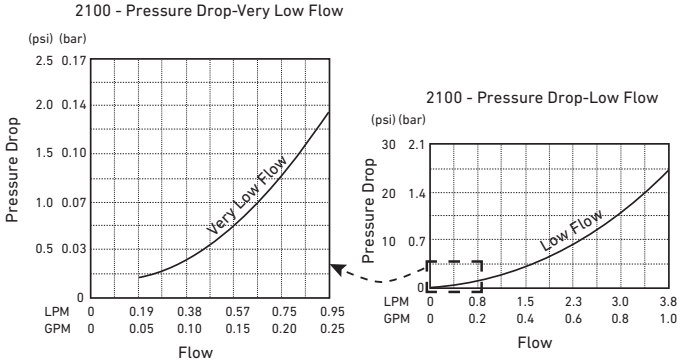

Model 2100 - High Flow

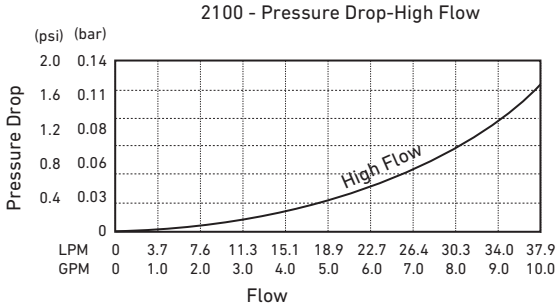

Model 2507 - High Flow

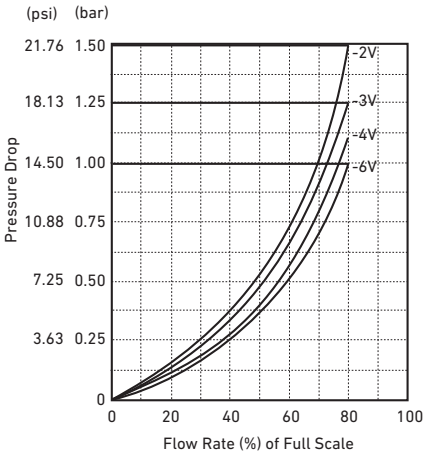

Model 3519

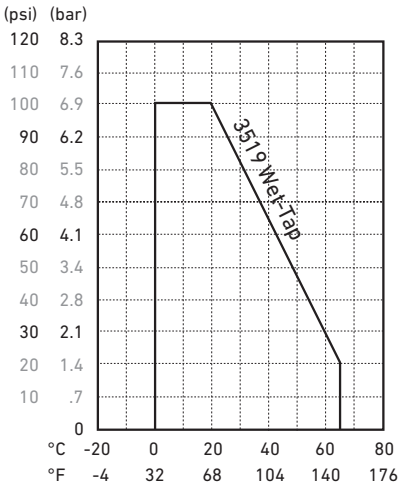

Operating Temperature/Pressure Graphs: Conductivity Electrodes

Note:
The pressure/temperature graphs are specifically for the Signet sensor. During system design the specifications of all components must be considered. In the case of a metal piping system, a plastic sensor will reduce the system specification. When using a PVDF sensor in a PVC piping system, the fitting will reduce the system specification.

Models 2819, 2820, 2821

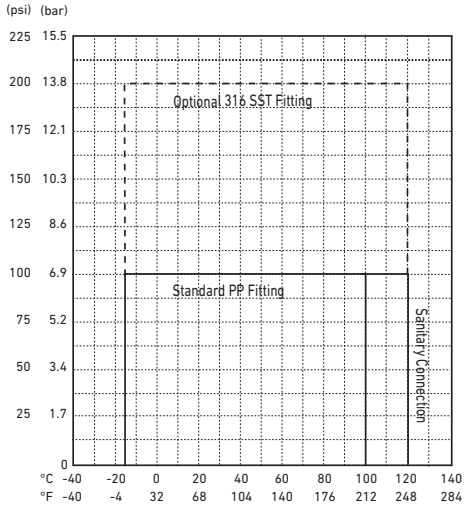

Model 2822

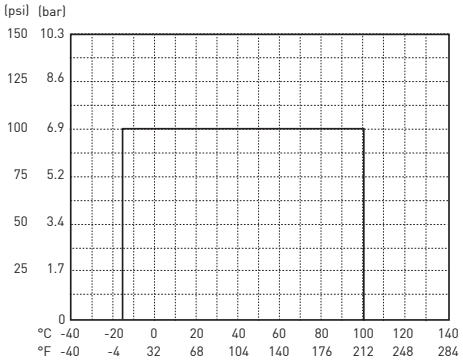

Model 2823

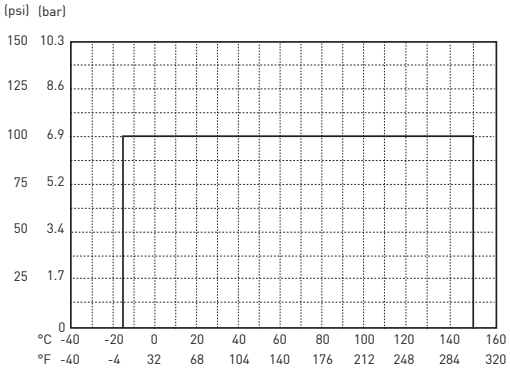

Models 2839-2842

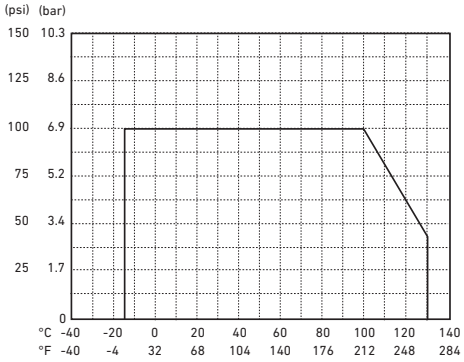

Operating Temperature/Pressure Graphs: Flow Sensor and pH Electrode Fittings

Note:
The pressure/temperature graphs are specifically for the Signet sensor. During system design the specifications of all components must be considered. In the case of a metal piping system, a plastic sensor will reduce the system specification. When using a PVDF sensor in a PVC piping system, the fitting will reduce the system specification.

PVC Saddles

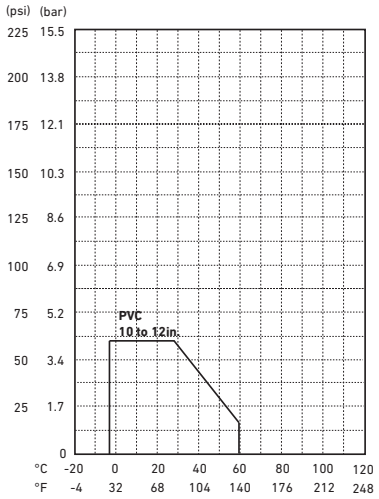

PVC Tees

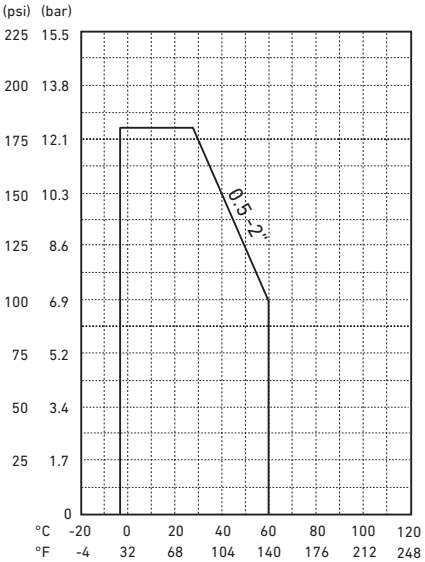

CPVC Tees

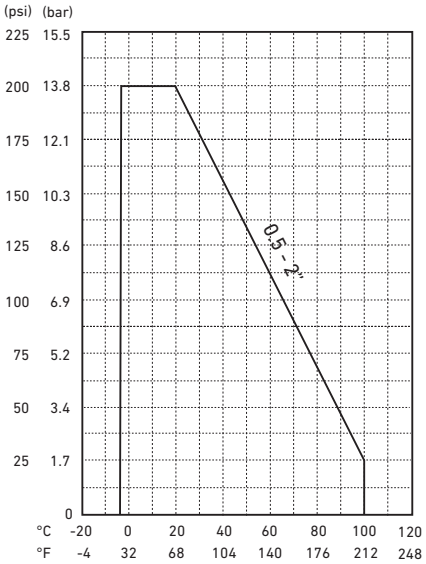

PP and PVDF Tees and Saddles

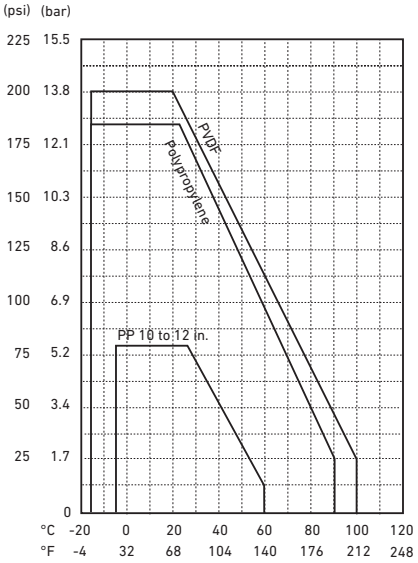

Fiberglass Tees

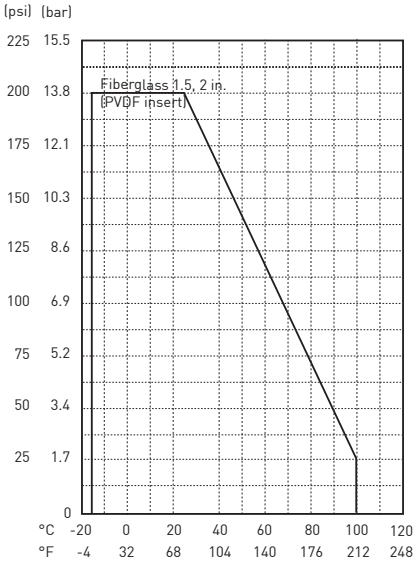

Operating Temperature/Pressure Graphs: Flow Sensor and pH Electrode Fittings

Note:
The pressure/temperature graphs are specifically for the Signet sensor. During system design the specifications of all components must be considered. In the case of a metal piping system, a plastic sensor will reduce the system specification. When using a PVDF sensor in a PVC piping system, the fitting will reduce the system specification.

PP Wafer Fittings

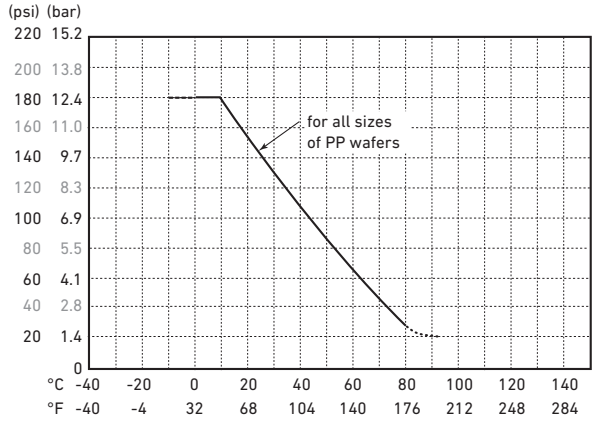

PVDF Wafer Fittings

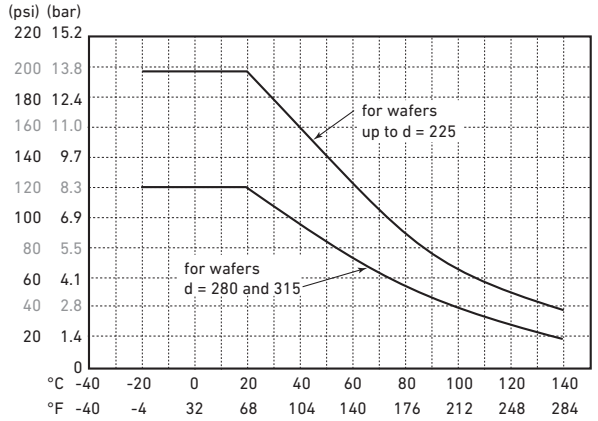

Metal Weldolets and Saddle Fittings

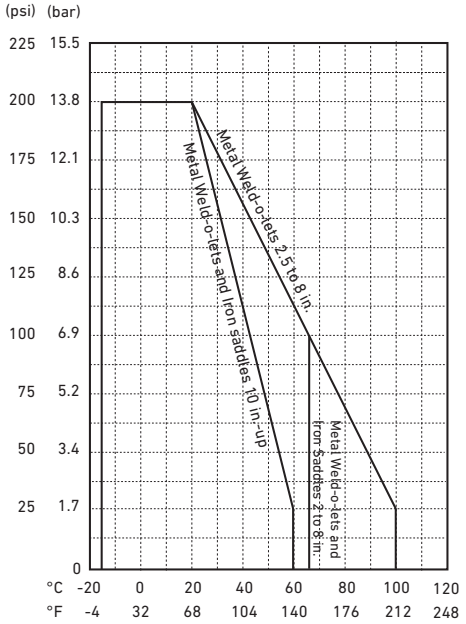

Metal Tees

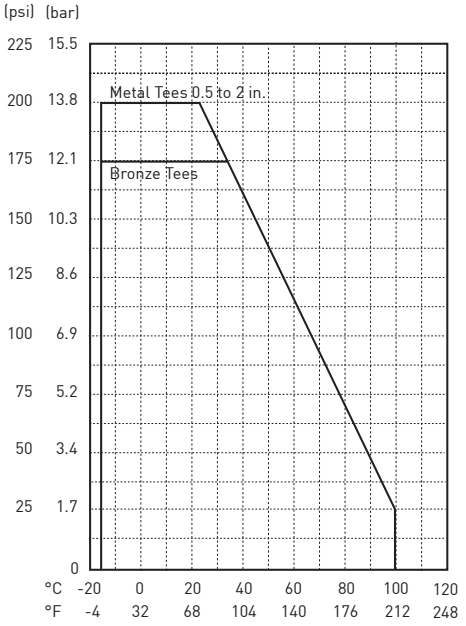

Operating Temperature/Pressure Graphs: pH/ORP Electrodes

Note:
The pressure/temperature graphs are specifically for the Signet sensor. During system design the specifications of all components must be considered. In the case of a metal piping system, a plastic sensor will reduce the system specification. When using a PVDF sensor in a PVC piping system, the fitting will reduce the system specification.

Models 2724-2726

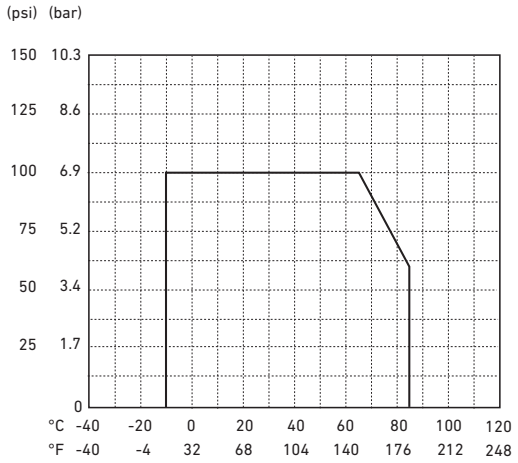

Models 2734-2736

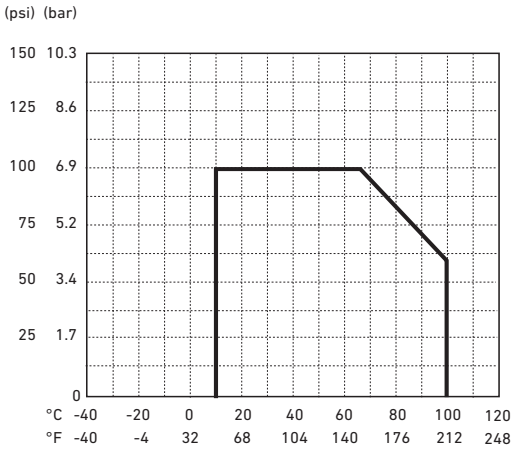

Models 2764-2767

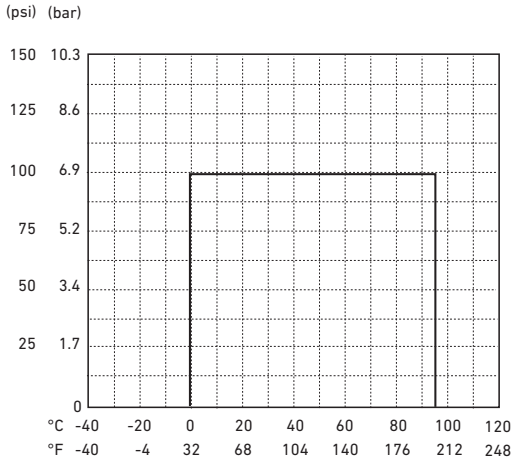

Models 2774-2777

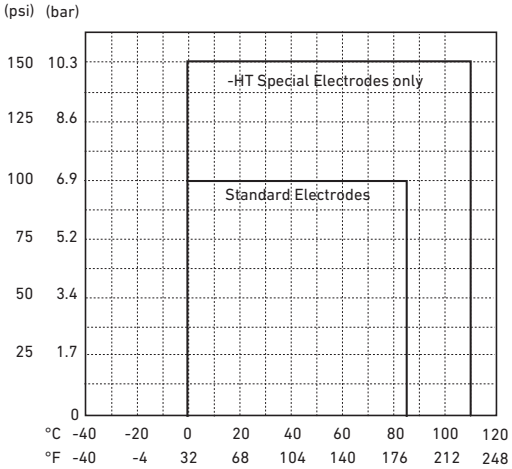

Model 3719

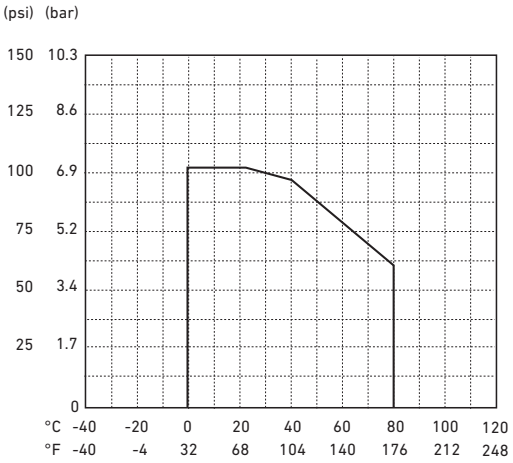

Operating Temperature/Pressure Graphs: Temperature/ Pressure Sensors

Note:
The pressure/temperature graphs are specifically for the Signet sensor. During system design the specifications of all components must be considered. In the case of a metal piping system, a plastic sensor will reduce the system specification. When using a PVDF sensor in a PVC piping system, the fitting will reduce the system specification.

Model 2250

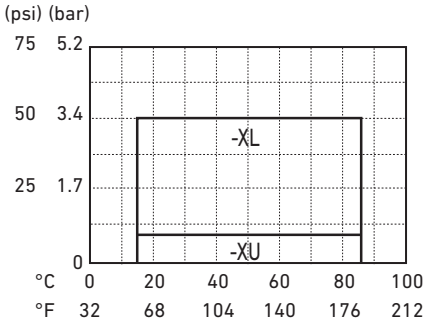

Model 2450

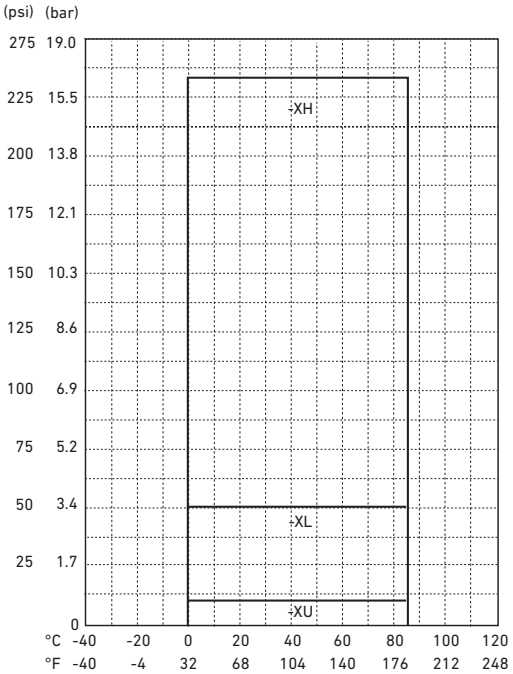

Model 2350

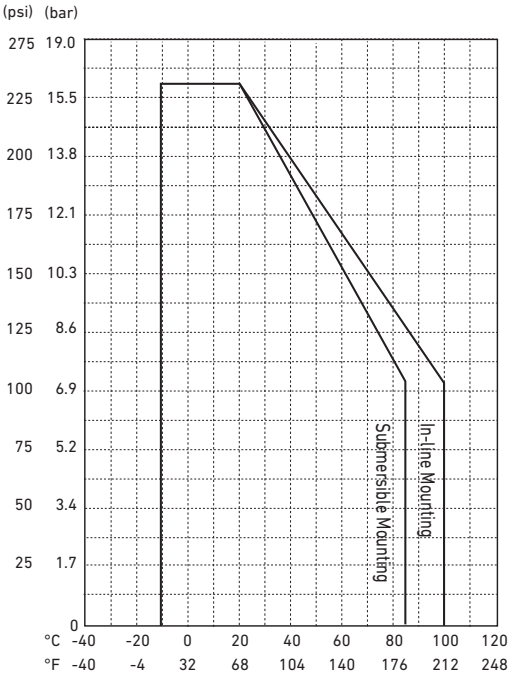

Product Retirements

Below is a list of retired products as well as their suitable replacement.
Please contact your local Georg Fischer sales office for more information.

Retired Products				Replacement Products		
	Mfr. Part No.	Code	Description	Mfr. Part No.	Code	Description
2750 pH/ORP Sensor Electronics						
	3-2750-1	**159 000 744**	In-line	3-2751-1 or 2751-2	**159 001 804**	In-line with 4.6 m (15 ft) cable
	3-2750-2	**159 000 745**	In-line with EasyCal	3-2751-2	**159 001 805**	In-line with EasyCal
	3-2750-3	**159 000 746**	Submersible with 4.6 m (15 ft) cable	3-2751-3	**159 001 806**	Submersible with 4.6 m (15 ft) cable
	3-2750-4	**159 000 842**	Submersible with 4.6 m (15 ft) cable, ISO	3-2751-4	**159 001 807**	Submersible with 4.6 m (15 ft) cable, ISO
4630 Chlorine Analyzer System						
	3-4630-10	**159 001 748**	Chlorine sensor measures 0.02 to 2 ppm, no pH sensor	3-4630-11	159 001 749	Chlorine sensor measures 0.02 to 2 ppm, with pH sensor
	3-4630-20	**159 001 691**	Chlorine sensor measures 0.05 to 5 ppm, no pH sensor	3-4630-21	159 001 692	Chlorine sensor measures 0.05 to 5 ppm, with pH sensor
	3-4630-30	**159 001 750**	Chlorine sensor measures 0.1 to 20 ppm, no pH sensor	3-4630-31	159 001 751	Chlorine sensor measures 0.1 to 20 ppm, with pH sensor
4150 Turbidimeter						
	3-4150-1	**159 001 596**	Turbidity ISO 1000 NTU	No Direct Replacement		
	3-4150-2	**159 001 597**	Turbidity ISO 1000 NTU			
	3-4150-3	**159 001 596**	White Light, 0 to 100 NTU/ FNU, w/ultrasonic auto self cleaning			
	3-4150-4	**159 001 599**	Infrared, 0 to 100 NTU/ FNU with ultrasonic auto self cleaning			
	3-4150-5	**159 001 600**	Turbidity EPA w/Auto Clean 1000 NTU			
	3-4150-6	**159 001 601**	Turbidity ISO w/Auto Clean 1000 NTU			
8850 Conductivity Transmitter						
	3-8850-3	**159 000 232**	Conductivity Transmitter	3-9900-1	**159 001 696**	9900 Transmitter (Field)
	3-8850-3P	**159 000 233**	Conductivity Transmitter	3-9950-1	**159 001 841**	Dual Channel Panel Mount Unit with Dual Current Loop Outputs
Dissolved Oxygen						
	3-2610-41	**159 001 754**	DO sensor, (S^3L), Modbus and 4-20 mA output	3-2610-51	**159 001 849**	Gen II Optical Dissolved Oxygen Sensor (0 to 20 ppm) with Digital S^3L, 4 to 20 mA, and Modbus output

Notes:

Glossary

4 to 20 mA: A standard analog signal used for the proportional representation of a measurement variable or process condition.

Absorb: To take up or receive by chemical or molecular action.

AC (Alternating Current): An electric current in which the flow reverses periodically. Compare direct current (DC).

Accumulator: See Totalizer

Accuracy: The ability of a measurement to match the actual value of the quantity being measured.

Acid: A corrosive liquid (usually in a solution) that dissolves metals and other materials. Technically, acidic material produces positive ions in solution. An acid is the opposite of a base and has a pH between 0 to 7. A given amount of an acid added to the same amount of a base neutralizes the base, producing water and a salt. Common vinegar, for example, is a weak solution of acetic acid.

Active Outputs: Current outputs that require no external power source to operate.

Adsorption: The clinging of molecules to the surface of particles; the process by which activated carbon removes contaminants from water.

Alkali: A bitter, caustic mineral often found in large beds in the desert. Alkalis are bases; two common examples are lye and ammonia.

Analog (also analogue): A type of signal in which data is represented by continuously variable, measurable, physical quantities, such as current or voltage. 4 to 20 mA is a common analog signal, as opposed to Digital.

Base: A bitter, caustic liquid. Technically, a basic material produces negative ions in solution. A base is the opposite of an acid and has a pH of 7 to 14. A given amount of a base added to the same amount of an acid neutralizes the acid; water and a salt are produced. Alkalis are bases; ammonia is a common base.

Batch Control: The process of dispensing a precise volume of fluid repetitively or in conjunction with another process.

BCF: Bead and Crevice Free; a welding technique for plastic pipes that yields a weld surface suitable for high purity application requirements.

Bi-Directional Flow: (1) All Signet flow sensors with a frequency output are bi-directional; the sensor will always have an output of "positive" flow no matter which direction the fluid is flowing in the pipe. (2) Flow sensors with 4 to 20 mA output can be set for uni- or bi-directional flow. Uni-directional flow indicates one direction of flow only, typically set as 4 mA equal to zero flow and 20 mA equal to the maximum flow rate required. Bi-directional flow indicates flow in both forward and reverse directions. Bi-directional flow can be set-up by making the 4 mA output equal to a negative number (for instance, -5 m/s) and the 20 mA output equal to a positive number (for instance, +5 m/s).

Blind Transmitter: Any device having 4 to 20 mA output without also having a local/permanent display.

Boolean: A logic system treating variables through the operators AND, OR, NOT, and XOR, where each operator can have one of two values, true or false.

Buffer: Typically a solution used as a calibration standard due to its ability to maintain a stable pH value.

Calibration: Systematic adjustment of the display and/or output of a measuring instrument for the purpose of conforming to a standard or actual value.

Caustic: Any strongly corrosive chemical substance, especially one that attacks organic matter. A caustic alkali is a metal hydroxide, especially that of an alkali metal; caustic soda is sodium hydroxide, and caustic potash is potassium hydroxide. Most inorganic acids, e.g., sulfuric acid, are caustic, especially when concentrated.

Cavitation: The formation and collapse of a gas pocket or bubble due to mechanical shearing of a fluid.

CE: Conformité Européene. A mark that is affixed to a product to designate that it is in full compliance with all applicable European Union legal requirements.

Cell Constant: 1) The distance between the two electrodes of a conductivity cell divided by their cross-sectional area. 2) A value associated with an effective measurement range used in the proper selection of conductivity cells for specific applications.

Chlorine: A halogen element, a heavy, greenish-yellow, incombustible, water-soluble, poisonous gas, obtained chiefly by electrolysis of sodium chloride brine, used for water purification in the making of bleaching powder, and in the manufacture both of chemicals that do not contain chlorine and of those that do.

Glossary

Condensation: The transformation of water vapor to liquid. Also, a chemical reaction in which two or more molecules combine, usually with the expulsion of water or some other substance.

Conductivity: The measure of the ability of a fluid to conduct an electrical current. In water, this ability is due to the presence of ionized substances in solution. Conductivity measurements usually include temperature compensation.

Corrosion: Material deterioration due to chemical attack.

Current (loop) Output: See 4 to 20 mA

DC (Direct Current): Electric current in which electrons flow in one direction only. Compare alternating current (AC).

Dead Band: The limits between which the input to an instrument can vary without causing a change to the instrument output.
In relay operation: The difference between the increasing and decreasing readings when the switch is operated between set point and reset point.
See also Hysteresis

DIN: Deutsches Institut für Normung e.V.
DIN is a non-governmental organization established to promote the development of standardization and related activities in Germany and related markets with the goal of facilitating the international exchange of goods and services, and to developing cooperation in the spheres of intellectual, scientific, technological and economic activity. Through the European standards organizations CEN and CENELEC, DIN also presents the German view in the development of the European standards that are critical to completion of the single European market.

DN: Diametre Nominal; Term used by DIN standards for the inside diameter of pipes.

Deionization: A purification process by which ionized particles are removed from water.

Desalination: Processes that remove salt from water, such as reverse osmosis, ion exchange, distillation and evaporation.

Desiccant: A granular, porous, silica based material that has the ability to absorb moisture. Desiccant is used to control humidity in a closed environment.

Desiccant Silica Gel: Is a granular, porous form of silica made synthetically from sodium silicate. Despite the name, silica gel is a solid. Silica gel is most commonly encountered in everyday life as beads packed in a semi-permeable pack. In this form, it is used as a desiccant to control local humidity and is used in industry for many purposes.

Diffusion: An intermingling of the molecules of liquids or gases.

Digital: A type of signal in which data is represented in numerical form.

Dry Contact Closure: Relay. The contacts of a mechanical switch.

Dry Contact Relay (DCR): An electromechanical device used to switch external power.

DryLoc®: Georg Fischer Signet LLC trade name and patented design for a versatile and robust connector scheme between sensor electronics and electrodes.

Dual Proportional Control: See relay control discussion on page 436 (also applies to transistor-type outputs).

EasyCal: The calibration routine in Signet pH and ORP systems in which standard buffers or test solutions are automatically recognized by the instrument.

Efficiency: For pH and ORP electrodes, the percent of theoretical slope.

Effluent: Liquid flowing out of a system, such as a discharge of liquid waste from a factory or water leaving a sewage treatment plant.

Electrode: 1) Primary detection device, typically analytical, requiring or benefiting from some secondary conditioning circuitry (e.g., pH and ORP electrodes). 2) Sensor.

Emissions: The potentially disruptive electromagnetic frequencies generated by an electronic device. Various standards defining allowable limits have been established.

Empty Pipe Detection: The empty pipe detection in Signet products features a zero flow output when the sensors are not completely wetted. This does not indicate an empty pipe, but rather a pipe that is not completely full.

Glossary

EP: Copolymer of Ethylene and Propylene or terpolymer with butadiene. Typically features good weather and chemical resistance. Typically used with diluted acids and alkalis, detergents, alcohols, steam and silicone oils.

EPR (EPDM): Ethylene Propylene Copolymer; Same as EP, EPR, and EPM.

EPM: Ethylene Propylene Copolymer; Same as EP and EPR, and EPR (EPDM).

EPR: Ethylene Propylene Copolymer; Same as EP, EPM, and EPR (EPDM).

Ethernet: A computer network architecture consisting of various specified local-area network protocols, devices, and connection methods.

FFKM : Also known as FFKM, trade names include or Kalrez (trademark) or Chemraz (registered trademark). Typical applications for this material include highly aggressive chemical processing, semiconductor wafer processing, pharmaceutical, oil and gas recovery, aerospace and petroleum.

Fluoroloy: Product of Saint Gobain.

Formazin: A very stable suspended solid that remains suspended in solution with water indefinitely. The suspended solid in Formazin can be hydrazine sulfate, $(NH_2)_2(H_2SO_4)$ or hexa-methylene-tetramine in water.

FKM: FKM is an elastomer, better known as Viton. *Viton® is a registered trademark of E. I. du Pont de Nemours and Company*

Frequency: The number of repetitions that occur in one second. Frequency can be used to describe electrical quantities, sound waves, mechanical vibrations, etc. Frequency is measured in units of Hertz (Hz). In Signet flow sensors, the output is defined in terms of frequency and used to calculate Flow Rate.

HART®
HART is a bi-directional communication protocol that provides data access between intelligent field instruments and host systems. A host can be any software application from a technician's hand-held device or laptop to a plant's process control, asset management, safety or other system using any control platform.

All Signet devices that use the HART Protocol as a basis for communications are tested according to the standards contained in HART Protocol Specification 7.2 (HCF_TEST-1 through HCF_TEST-4) to ensure full compliance with all Protocol requirements prior to being listed in the Foundation's Supplier Product Catalog.

HDMI: High Definition Multimedia Interface

Hot-Tap: A mechanical assembly that allows the insertion and removal of a sensor or electrode without the need for system shutdown, and initial installation may be performed under pressurized conditions. Similar to Wet-Tap.

Hysteresis: In relay Setpoint programming, the difference between the activation point and the release point. See also Deadband.

Impedance: A measure of the apparent resistance posed by an electrical circuit to an alternating current (AC).

Immunity: Ability of a device to function without disruption in the presence of electromagnetic interference.

Insertion Flow Sensor: A type of flow sensor that installs through a hole in the wall of a pipe and converts a local velocity measurement into a calculation of the flow rate in the pipe. Usually used in comparison to “full bore” or “full line” flow sensor.

Intrinsically Safe: Term used to identify any device, instrument or component that will not produce any spark or thermal effects under any conditions that are normal or abnormal that will ignite a specified gas mixture. Electrical and thermal energy limits are at levels incapable of causing ignition. It is common practice to use external barriers with intrinsically safe installations.

Ion: An electrically charged atom or group of atoms.

IP - Ingress Protection: Ingress Protection (IP) ratings are defined in international standard IEC 60529. They are used to define levels of sealing effectiveness of electrical enclosures against intrusion from foreign bodies (tools, dirt etc) and moisture.

IR: Infrared, refers to a welding technique offered within the range of SYGEF® HP products.

IR - Infrared Light: Light whose wave length is just below the light sensitivity of the human eye.

ISO: International Organization for Standardization: A voluntary organization that creates international standards, including the standards for computers and communications. The American National Standards Institute, ANSI is a member of ISO.

ISO 14001: International Organization for Standardization environmental standard.

Glossary

ISO 9001: International Organization for Standardization quality standard.

Isolated/Isolation: Electrical separation between two or more circuits used to prevent measuring errors, ground loops, or a shock hazard.

K-Factor: In Signet Flow sensors, the number of pulses generated by the sensor for each unit of volume that passes by the sensor. Usually published in pulses per gallon and pulses per liter.

Linearity: The extent to which an output (response) is strictly proportional to an input (stimulus).

Loop: In electricity, a complete circuit. Usually used in reference to a 4 to 20 mA loop, an output signal used to control valves, actuators etc.

Loop Impedance: The maximum allowable total electrical resistance of all devices, including wiring, connected to any electrical loop; expressed in Ohms at a specified voltage level, i.e.; 600 Ω @ 12 VDC.

Loop Output: An analog output signal, usually 4 to 20 mA.

Loop Powered: In Signet products, any instrument that derives operating power from a 4 to 20 mA loop.

Magmeter: Electromagnetic flowmeter.

Metalex: Product name of fixed insertion metal paddlewheel flow sensors manufactured by Georg Fischer Signet LLC

Mho: The unit of conductance such that a constant voltage of one volt between its ends produces a current of one ampere in the conductor.

Mini-Tap: Stainless steel installation fittings for use with Metalex flow sensors.

NEMA Ratings: National Electrical Manufacturer Association (NEMA) Ratings define the types of environments in which an electrical enclosure can be used. Ratings signify a fixed enclosure's ability to withstand certain environmental conditions such as external icing, corrosive materials, oil immersion, dust, water, etc.

NIST: National Institute of Standards and Technology.

Non-isolated: Two or more electrical circuits sharing a common ground. When separated by distance or connected to additional circuitry there is increased probability for measurement errors due to ground loops.

Ohm: The unit of measure for electrical resistance. A resistance of 1 ohm will pass 1 ampere of current when a voltage of 1 volt is applied.

OHSAS 18001: Occupational Health and Safety Assessment Series – Published by BSI, the National Standards Body of the UK, this is an international group of standards and guidelines dedicated to occupational health and safety.

Open Collector Output: An NPN transistor or FET output generally used to pull a signal from high to low. Device used for frequency, pulse, and alarm outputs.

Operating Pressure: Maximum vapor pressure from process

Operating Temperature: The temperature at which a product is capable of operating; usually a minimum and maximum value.

ORP (Oxidation Reduction Potential): A method of measuring the degree of completion of a chemical reaction by detecting the ratio of ions in the reduced form to those in the oxidized form as a variation in electrical potential measured by an ORP electrode.

Paddlewheel: A type of insertion flow sensor (pioneered by Georg Fischer Signet LLC) that utilizes a bladed rotor to engage the fluid flowing in a pipe. The spinning rotor produces a frequency output directly proportional to the fluid velocity.

Passive Outputs: Current outputs that require external power to operate.

PBT: PolyButylene Terephthalate: A semi-crystalline polymer, combining good strength and stiffness with low moisture absorption, exceptional thermal stability, excellent electrical insulation properties, outstanding dimensional stability and resistance to the effects of a wide range of chemicals, solvents, and oils.

PEEK®: PolyEtherEtherKetone; an engineering thermoplastic with excellent chemical and water resistance. In Signet products, the yellow housing in ProcessPro field-mount instruments.

Percent Rejection: An indicator of RO system efficiency and membrane condition. Defined as one minus the ratio of the conductivity of RO product water to feed water, expressed as a percentage, and representing the extent to which incoming contaminants were rejected by the system.

Glossary

pH: A measure of the acidity or alkalinity of a solution, numerically equal to 7 for neutral solutions, increasing with increasing alkalinity and decreasing with increasing acidity. The pH scale commonly in use ranges from 0 to 14.

Polypropylene (PP): PP is a polymer of ethylene with an isotactic arrangement of methyl groups.

Preamplifier: A device used typically to protect the relatively weak output signals of pH and ORP electrodes from the wide variety of electromagnetic interference common in most industrial environments.

ProcessPro®: Signet product name for a group of instruments characterized by a basic 4 to 20 mA Loop output, for the measurement of Flow, pH/ORP, Conductivity/Resistivity, Level, Pressure and Temperature.

PROFIBUS and PROFINET International (PI): PROFIBUS International (PI) is an independent organization responsible for the PROFIBUS protocols. PROFIBUS is standardized by the International Electrotechnical Commission (IEC) as IEC 61158. PI, through its regional associations, competence centers, training centers and test labs ensure high quality products and devices that implement the PROFIBUS standards.

Proof Pressure: Maximum water or hydraulic pressure.

ProPoint®: Signet product name for a group of panel mount instruments for the measurement of Flow, Batch, pH/ORP, Conductivity/Resistivity, Salinity and others. Characterized by a unique analog and digital display.

Proportional Pulse: In Signet products, an operating mode for relays and open-collector outputs that varies the frequency of the pulse in direct proportion to input variations.

PTFE: Polytetrafluoroethylene, also known as TFE.

Pull-up resistor: A resistor needed to obtain the high-level voltage signal in a transistor-type output circuit.

PWM: Pulse Width Modulation; In Signet products, an operating mode for relays and open-collector outputs characterized by varying the time that a pulse is "on" versus the time it is "off." Also, a method of digitally encoding analog signal levels.

Quinhydrone: A crystalline powder typically added to pH 4 and 7 buffers for the purpose of producing standard solutions used in the calibration of ORP measuring systems.

RC Filter: A resistive-capacitive device, often referred to as a "snubber," designed to protect instrumentation and relay contacts by capturing the voltage spikes resulting from the switching of large inductive loads such as solenoids and motor starters, etc.

REDOX: Reduction/Oxidation; Same as ORP.

Relative Humidity: The amount of moisture in the air as compared with the maximum amount that the air could contain at the same temperature, expressed as a percentage.

Relay: An electromechanical switch.

Repeatability: The extent to which an output (response) repeatedly corresponds to identical input (stimulus) during dynamic conditions.

Resistivity: The inverse of conductivity (1/conductivity).

Reverse Osmosis: A process that allows the removal of particles as small as ions from a solution. The most common use for reverse osmosis is in purifying water. It is used to produce water that meets the most demanding specifications that are currently in place.

Reynolds Number: A dimensionless quantity associated with the smoothness of flow of a fluid. At low velocities fluid flow is smooth, or laminar, and the fluid can be pictured as a series of parallel layers, or lamina, moving at different velocities. The fluid friction between these layers gives rise to v
iscosity. As the fluid flows more rapidly, it reaches a velocity, known as the critical velocity, at which the motion changes from laminar to turbulent, with the formation of eddy currents and vortices that disturb the flow.

The formula can be stated as:

$R=dv/\mu$ where d is inside diameter, v is velocity and μ is viscosity.

In general,

- $R < 2000$ = Laminar Flow
- $R > 2000 < 4500$ = Transitional (Indeterminate)
- $R > 4500$ = Fully Developed & Turbulent (most flow sensors operate best in turbulent flow)

Rotor-X: Family trade name of the original plastic paddlewheel flow sensors.

Glossary

Ryton®: Trade name for Polyphenylene Sulfide or PPS. Other trade names include Fortron®, Tedar®, Supec®, and Tedur® (all registered trademarks).

(S^3L): Acronym for Signet Sensor Serial Link; a digital communication method between Signet sensors and host instruments.

SafeLoc™: Name coined by Georg Fischer Signet LLC to define the unique locking mechanism used in the Signet 3719 pH Wet-tap assembly.

Salinity: A measurement of dissolved salt concentration, as in seawater, typically expressed in parts per thousand (ppt).

Sensor: 1) A primary detection device typically providing direct input to a measurement instrument (i.e., paddlewheel flow sensor). 2) The combination of an electrode and some secondary conditioning circuitry (i.e., pH electrode and preamplifier). 3) Electrode.

Signet: Model name of fluid measurement sensors and instruments marketed under the Georg Fischer Piping Systems brand.

Sleeved Rotor: An accessory rotor featuring a self-lubricating mechanical sleeve that replaces the standard liquid bearing of Rotor-X paddlewheel flow sensors. Sleeved rotors will extend the maintenance interval in applications known to produce premature rotor wear, such as those involving abrasive liquids.

SmartPro®: Signet product name for a new family of instruments.

Specific Gravity: Ratio of the mass of a body to the mass of an equal body of volume of water at 4 °C, or some other specified temperature.

Suspended Solids: Particulate suspended (as opposed to being dissolved) and typically creating turbid, cloudy conditions in liquid.

SSR: Solid-state relay

TDS: Total dissolved solids

Totalizer: In flow instrumentation, a permanent or resettable counter for volume such as gallons or tens of gallons, etc.

Transmitter (two-wire): A device that converts an electrode or sensor input to a 4 to 20 mA output using the same two wires for signal transmission as for system power.

Turndown Ratio: Dynamic response characteristic. The ratio of a sensor's maximum measurement range to its minimum measurement range.

UHMW Polyethylene: Ultra High Molecular Weight polyethylene. Very good chemical resistance of corrosives; very good stress cracking resistance (with the exception of strong oxidizing acids at elevated temperatures).

UL Type Ratings: Underwriters Laboratories Type Ratings are based on similar application descriptions and expected performance as NEMA Rating, but UL requires enclosure testing and site inspections.

Viscosity: The internal friction of a fluid, caused by molecular attraction, which makes it resist a tendency to flow.

Voltage (output): A standard analog signal (0 to 5 or 0 to 10 VDC for Signet products) used for the proportional representation of a measurement variable or process condition.

Weldolet: A weld-on branch connection for metal pipe typically used as an installation fitting for insertion-style sensors or electrodes.

Wet-Tap: A mechanical assembly that, after initial installation into a non-pressurized system, allows the insertion and removal of a sensor or electrode without the need for system shutdown. Similar to Hot-Tap.

White Light: The combined light whose wave lengths are all within the range of sensitivity of the human eye.

Window (Relay Module): An out-of-range alarm scenario that allows a single relay to be triggered by either a high or a low process condition. For example, a relay in window mode can be programmed to trigger if a pH value in a final effluent tank drops below 6.0 or rises above 8.5.

Service & Support

Quality & Environment Systems

We are fully registered to ISO 9001, ISO 14001 and OHSAS 18001 through Underwriters Laboratories Inc. under the scope of industrial instruments for measurement, display, and control of process variables, and related products. All assembly processes, calibration and test procedures are controlled through our Quality and Environmental Management System modelled to comply with ISO 9001, ISO 14001 and OHSAS 18001. Our very culture is one of developing safe processes and procedures which continues to improve our systems, products, and environments.

Regulations, Approvals and Certification

Electronic products meet the requirements of European Directives where applicable: Electromagnetic Compatibility (EMC), Low Voltage (LV), Waste of Electrical and Electronic Equipment (WEEE), and Restriction of the Use of Certain Hazardous Substances in Electrical and Electronic Equipment (RoHS). Relevant products are also approved/listed by the Nationally Recognized Testing Laboratories (NRTLs) such as Underwriters Laboratories (UL), and/or Intertek (ETL). Certificates are available upon request.

Data Sheets/Catalog

Full product and application information is found in our published literature. Full specifications for every product are provided with temperature/pressure graphs, a system overview to outline how parts fit together, an ordering matrix, and even application tips and dimensions are included. Additionally, the catalog includes a system compatibility, a side-by-side product specification matrix, and a comprehensive technical reference section.

Technical Support

Qualified technical support representatives are available at each of our sales companies to assist you with your product and application questions. Just contact our specialists on the telephone numbers or email address shown on the back page of this catalog, or visit our website for supporting documentation. Visit www.gfpiping.com

The Difference with GF Piping Systems:

- Simplicity
- Reliability
- Economy
- Global Availability & Support
- Packaged Piping Systems Solutions

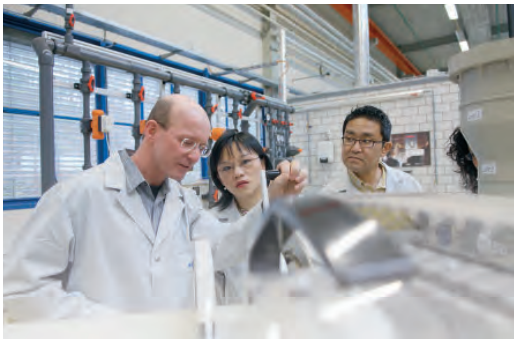

Training

GF Piping Systems offers comprehensive product and application training in numerous countries around the world. The Measurement & Control program covers detailed application examples for all products including Flow, pH/ORP, Dissolved Oxygen, Chlorine, Conductivity/Resistivity, Pressure, Level and Temperature measurement systems. Good practices are taught for installation and calibration of all products so users may obtain the most optimum performance from their measurement package. Contact your local sales company for further information.

Website

Quickly access a world of information easily by going to www.gfpiping.com. Whether you wish to print operation manuals (available in multiple languages) for installation and calibration, a data sheet for specifications, or even an FAQ to answer that question you have been meaning to get answered, you will find it all here. Additionally, we list sales company contact information, warranty statement, CAD drawings, Tech-Tips, copies of certificates, an Applications Library, Articles, and an easy-to-use K-Factor Calculator.

Specials

Any non-catalog product is classified as a “special request”. Should you require a sensor with an alternative material that is a non-molded item to suit your specific application requirement, or an additional cable length than provided with your product of choice, we remain flexible to accommodate your needs. Contact your local sales company for further information.

+ Communication

Includes output types to support multiple platforms

Signet Instrument

Digital (S^3L) or Frequency

PC Running Signet 0252 Configuration Tool

Digital (S^3L)

Smart Phone/Tablet

GF Configuration Tool Bluetooth® App

4 to 20 mA

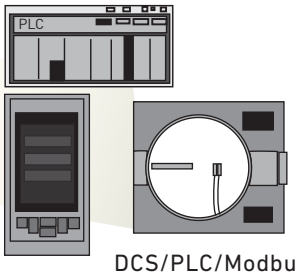

DCS/PLC/Modbus

Worldwide at home

Our sales companies and representatives ensure local customer support in over 100 countries.

Argentina / Southern South America
Georg Fischer Central Plastics
Sudamérica S.R.L.
Buenos Aires, Argentina
Phone +54 11 4512 02 90
gfcentral.ps.ar@georgfischer.com
www.gfps.com/ar

Australia
George Fischer Pty Ltd
Riverwood NSW 2210 Australia
Phone +61 (0) 2 9502 8000
australia.ps@georgfischer.com
www.gfps.com/au

Austria
Georg Fischer
Rohrleitungssysteme GmbH
3130 Herzogenburg
Phone +43 (0) 2782 856 43-0
austria.ps@georgfischer.com
www.gfps.com/at

Belgium / Luxembourg
Georg Fischer NV/SA
1070 Bruxelles/Brüssel
Phone +32 (0) 2 556 40 20
be.ps@georgfischer.com
www.gfps.com/be

Brazil
Georg Fischer Sist. de Tub. Ltda.
04795-100 São Paulo
Phone +55 (0) 11 5525 1311
br.ps@georgfischer.com
www.gfps.com/br

Canada
Georg Fischer Piping Systems Ltd
Mississauga, ON L5T 2B2
Phone +1 (905) 670 8005
Fax +1 (905) 670 8513
ca.ps@georgfischer.com
www.gfps.com/ca

China
Georg Fischer Piping Systems Ltd
Shanghai 201319
Phone +86 21 3899 3899
china.ps@georgfischer.com
www.gfps.com/cn

Denmark / Iceland
Georg Fischer A/S
2630 Taastrup
Phone +45 (0) 70 22 19 75
info.dk.ps@georgfischer.com
www.gfps.com/dk

Finland
Georg Fischer AB
01510 VANTAA
Phone +358 (0) 9 586 58 25
Fax +358 (0) 9 586 58 29
info.fi.ps@georgfischer.com
www.gfps.com/fi

France
Georg Fischer SAS
95932 Roissy Charles de Gaulle Cedex
Phone +33 (0) 1 41 84 68 84
fr.ps@georgfischer.com
www.gfps.com/fr

Germany
Georg Fischer GmbH
73095 Albershausen
Phone +49 (0) 7161 302-0
info.de.ps@georgfischer.com
www.gfps.com/de

India
Georg Fischer Piping Systems Ltd
400 076 Mumbai
Phone +91 224007 2001
branchoffice@georgfischer.com
www.gfps.com/in

Indonesia
George Fischer Pte Ltd –
Representative Office
Phone +62 21 2900 8564
Fax +62 21 2900 8566
sgp.ps@georgfischer.com
www.gfps.com/sg

Italy
Georg Fischer S.p.A.
20063 Cernusco S/N (MI)
Phone +39 02 921 861
it.ps@georgfischer.com
www.gfps.com/it

Japan
Georg Fischer Ltd
556-0011 Osaka,
Phone +81 (0) 6 6635 2691
jp.ps@georgfischer.com
www.gfps.com/jp

Korea
GF Piping Systems
Georg Fischer Korea Co., Ltd.
Unit 2501, U-Tower
120 HeungdeokJungang-ro (Yeongdeok-dong)
Giheung-gu, Yongin-si, Gyeonggi-do, Korea
Phone: +82 31 8017 1450
Fax : +82 31 217 1454
kor.ps@georgfischer.com
www.gfps.com/kr

Malaysia
George Fischer (M) Sdn. Bhd.
No. 2, 4 & 6, Jalan Permata 3/KS 09
Taman Perindustrian Air Hitam
41200 Klang, Selangor Darul Ehsan
Phone +60 (0) 3 3122 5585
Fax +603 3122 5575
my.ps@georgfischer.com
www.gfps.com/my

Mexico / Northern Latin America
Georg Fischer S.A. de C.V.
Apodaca, Nuevo Leon
CP66636 Mexico
Phone +52 (81) 1340 8586
Fax +52 (81) 1522 8906
mx.ps@georgfischer.com
www.gfps.com/mx

Middle East
Georg Fischer
Piping Systems (Switzerland) Ltd
Dubai, United Arab Emirates
Phone +971 4 289 49 60
gcc.ps@georgfischer.com
www.gfps.com/int

Netherlands
Georg Fischer N.V.
8161 PA Epe
Phone +31 (0) 578 678 222
nl.ps@georgfischer.com
www.gfps.com/nl

Norway
Georg Fischer AS
1351 Rud
Phone +47 67 18 29 00
no.ps@georgfischer.com
www.gfps.com/no

Philippines
George Fischer Pte Ltd
Representative Office
Phone +632 571 2365
Fax +632 571 2368
sgp.ps@georgfischer.com
www.gfps.com/sg

Poland
Georg Fischer Sp. z o.o.
05-090 Sekocin Nowy
Phone +48 (0) 22 31 31 0 50
poland.ps@georgfischer.com
www.gfps.com/pl

Romania
Georg Fischer
Piping Systems (Switzerland) Ltd
020257 Bucharest - Sector 2
Phone +40 (0) 21 230 53 80
ro.ps@georgfischer.com
www.gfps.com/int

Russia
Georg Fischer
Piping Systems (Switzerland) Ltd
Moscow 125047
Phone +7 495 258 60 80
ru.ps@georgfischer.com
www.gfps.com/ru

Singapore
George Fischer Pte Ltd
11 Tampines Street 92, #04-01/07
528 872 Singapore
Phone +65 6747 0611
Fax +65 6747 0577
sgp.ps@georgfischer.com
www.gfps.com/sg

Spain / Portugal
Georg Fischer S.A.
28046 Madrid
Phone +34 (0) 91 781 98 90
es.ps@georgfischer.com
www.gfps.com/es

Sweden
Georg Fischer AB
117 43 Stockholm
Phone +46 (0) 8 506 775 00
info.se.ps@georgfischer.com
www.gfps.com/se

Switzerland
Georg Fischer
Rohrleitungssysteme (Schweiz) AG
8201 Schaffhausen
Phone +41 (0) 52 631 30 26
ch.ps@georgfischer.com
www.gfps.com/ch

Taiwan
Georg Fischer Co., Ltd
San Chung Dist., New Taipei City
Phone +886 2 8512 2822
Fax +886 2 8512 2823
www.gfps.com/tw

United Kingdom / Ireland
George Fischer Sales Limited
Coventry, CV2 2ST
Phone +44 (0) 2476 535 535
uk.ps@georgfischer.com
www.gfps.com/uk

USA / Caribbean
Georg Fischer LLC
9271 Jeronimo Road
92618 Irvine, CA
Phone +1 714 731 88 00
Fax +1 714 731 62 01
us.ps@georgfischer.com
www.gfps.com/us

International
Georg Fischer
Piping Systems (Switzerland) Ltd
8201 Schaffhausen/Switzerland
Phone +41 (0) 52 631 30 03
Fax +41 (0) 52 631 28 93
info.export@georgfischer.com
www.gfps.com/int

GF Piping Systems
Tel. (714) 731-8800, Toll Free (800) 854-4090, Fax (714) 731-6201
us.ps@georgfischer.com, www.gfpiping.com

Item #0100 (9/19)

Printed in USA